# THE DATASHEET OF

# A3PN015-QNG68I

www.win-source.net 0086-755-83957316

# ProASIC3 nano FPGA Fabric

## User's Guide

Microsemi

# Table of Contents


Introduction . . . 7
Contents . . . 7
Revision History . . . 7
Related Information . . . 7

1 FPGA Array Architecture in Low Power Flash Devices . . . 9
Device Architecture . . . 9
FPGA Array Architecture Support . . . 10
Device Overview . . . 11
Related Documents . . . 20
List of Changes . . . 20

2 Low Power Modes in ProASIC3/E and ProASIC3 nano FPGAs . . . 21
Introduction . . . 21
Power Consumption Overview . . . 21
Static (Idle) Mode . . . 22
User Low Static (Idle) Mode . . . 23
Sleep Mode . . . 25
Shutdown Mode . . . 27
Conclusion . . . 28
Related Documents . . . 28
List of Changes . . . 29

3 Global Resources in Low Power Flash Devices . . . 31
Introduction . . . 31
Global Architecture . . . 31
Global Resource Support in Flash-Based Devices . . . 32
VersaNet Global Network Distribution . . . 33
Chip and Quadrant Global I/Os . . . 35
Spine Architecture . . . 41
Using Clock Aggregation . . . 44
Design Recommendations . . . 46
Conclusion . . . 58
Related Documents . . . 58
List of Changes . . . 59

4 Clock Conditioning Circuits in Low Power Flash Devices and Mixed Signal FPGAs . . . 61
Introduction . . . 61
Overview of Clock Conditioning Circuitry . . . 61
CCC Support in Microsemi's Flash Devices . . . 63
Global Buffers with No Programmable Delays . . . 64
Global Buffer with Programmable Delay . . . 64
Global Buffers with PLL Function . . . 67
Global Input Selections . . . 71
Device-Specific Layout . . . 78

PLL Core Specifications . . . 84
Functional Description . . . 85
Software Configuration . . . 96
Detailed Usage Information . . . 104
Recommended Board-Level Considerations . . . 112
Conclusion . . . 113
Related Documents . . . 113
List of Changes . . . 113

5 FlashROM in Microsemi's Low Power Flash Devices . . . 117
Introduction . . . 117
Architecture of User Nonvolatile FlashROM . . . 117
FlashROM Support in Flash-Based Devices . . . 118
FlashROM Applications . . . 120
FlashROM Security . . . 121
Programming and Accessing FlashROM . . . 122
FlashROM Design Flow . . . 124
Custom Serialization Using FlashROM . . . 129
Conclusion . . . 130
Related Documents . . . 130
List of Changes . . . 130

6 SRAM and FIFO Memories in Microsemi's Low Power Flash Devices . . . 131
Introduction . . . 131
Device Architecture . . . 131
SRAM/FIFO Support in Flash-Based Devices . . . 134
SRAM and FIFO Architecture . . . 135
Memory Blocks and Macros . . . 135
Initializing the RAM/FIFO . . . 148
Software Support . . . 154
Conclusion . . . 157
List of Changes . . . 157

7 I/O Structures in nano Devices . . . 159
Introduction . . . 159
Low Power Flash Device I/O Support . . . 161
nano Standard I/Os . . . 162
I/O Architecture . . . 164
I/O Standards . . . 166
Wide Range I/O Support . . . 166
I/O Features . . . 167
Simultaneously Switching Outputs (SSOs) and Printed Circuit Board Layout . . . 176
I/O Software Support . . . 177
User I/O Naming Convention . . . 178
I/O Bank Architecture and CCC Naming Conventions . . . 179
Board-Level Considerations . . . 181
Conclusion . . . 182
Related Documents . . . 183
List of Changes . . . 183

8 I/O Software Control in Low Power Flash Devices . . . 185
Flash FPGAs I/O Support . . . 186
Software-Controlled I/O Attributes . . . 187
Implementing I/Os in Microsemi Software . . . 188
Assigning Technologies and VREF to I/O Banks . . . 198
Conclusion . . . 203
Related Documents . . . 203
List of Changes . . . 204

9 DDR for Microsemi's Low Power Flash Devices . . . 205
Introduction . . . 205
Double Data Rate (DDR) Architecture . . . 205
DDR Support in Flash-Based Devices . . . 206
I/O Cell Architecture . . . 207
Input Support for DDR . . . 209
Output Support for DDR . . . 209
Instantiating DDR Registers . . . 210
Design Example . . . 216
Conclusion . . . 218
List of Changes . . . 219

10 Programming Flash Devices . . . 221
Introduction . . . 221
Summary of Programming Support . . . 221
Programming Support in Flash Devices . . . 222
General Flash Programming Information . . . 223
Important Programming Guidelines . . . 229
Related Documents . . . 231
List of Changes . . . 232

11 Security in Low Power Flash Devices . . . 235
Security in Programmable Logic . . . 235
Security Support in Flash-Based Devices . . . 236
Security Architecture . . . 237
Security Features . . . 238
Security in Action . . . 242
FlashROM Security Use Models . . . 245
Generating Programming Files . . . 247
Conclusion . . . 258
Glossary . . . 258
References . . . 258
Related Documents . . . 259
List of Changes . . . 259

12 In-System Programming (ISP) of Microsemi's Low Power Flash Devices Using FlashPro4/3/3X . . . 261
Introduction . . . 261
ISP Architecture . . . 261
ISP Support in Flash-Based Devices . . . 262
Programming Voltage (VPUMP) and VJTAG . . . 263
Nonvolatile Memory (NVM) Programming Voltage . . . 263

IEEE 1532 (JTAG) Interface . . . 264
Security . . . 264
Security in ARM-Enabled Low Power Flash Devices . . . 265
FlashROM and Programming Files . . . 267
Programming Solution . . . 268
ISP Programming Header Information . . . 269
Board-Level Considerations . . . 271
Conclusion . . . 272
Related Documents . . . 272
List of Changes . . . 273

13 Core Voltage Switching Circuit for IGLOO and ProASIC3L In-System Programming . . . 275
Introduction . . . 275
Microsemi's Flash Families Support Voltage Switching Circuit . . . 276
Circuit Description . . . 277
Circuit Verification . . . 278
DirectC . . . 280
Conclusion . . . 280
List of Changes . . . 281

14 Microprocessor Programming of Microsemi's Low Power Flash Devices . . . 283
Introduction . . . 283
Microprocessor Programming Support in Flash Devices . . . 284
Programming Algorithm . . . 285
Implementation Overview . . . 285
Hardware Requirement . . . 288
Security . . . 288
Conclusion . . . 289
List of Changes . . . 290

15 Boundary Scan in Low Power Flash Devices . . . 291
Boundary Scan . . . 291
TAP Controller State Machine . . . 291
Microsemi's Flash Devices Support the JTAG Feature . . . 292
Boundary Scan Support in Low Power Devices . . . 293
Boundary Scan Opcodes . . . 293
Boundary Scan Chain . . . 293
Board-Level Recommendations . . . 294
Advanced Boundary Scan Register Settings . . . 295
List of Changes . . . 296

16 UJTAG Applications in Microsemi's Low Power Flash Devices . . . 297
Introduction . . . 297
UJTAG Support in Flash-Based Devices . . . 298
UJTAG Macro . . . 299
UJTAG Operation . . . 300
Typical UJTAG Applications . . . 302
Conclusion . . . 306
Related Documents . . . 306
List of Changes . . . 306

17 Power-Up/-Down Behavior of Low Power Flash Devices . . . 307
Introduction . . . 307
Flash Devices Support Power-Up Behavior . . . 308
Power-Up/-Down Sequence and Transient Current . . . 309
I/O Behavior at Power-Up/-Down . . . 311
Cold-Sparing . . . 316
Hot-Swapping . . . 317
Conclusion . . . 317
Related Documents . . . 318
List of Changes . . . 318

A Summary of Changes . . . 319
History of Revision to Chapters . . . 319

B Product Support . . . 321
Customer Service . . . 321
Customer Technical Support Center . . . 321
Technical Support . . . 321
Website . . . 321
Contacting the Customer Technical Support Center . . . 321
ITAR Technical Support . . . 322

Index . . . 323

# Introduction

## Contents

This user's guide contains information to help designers understand and use Microsemi's ProASIC®3 nano devices. Each chapter addresses a specific topic. Most of these chapters apply to other Microsemi device families as well. When a feature or description applies only to a specific device family, this is made clear in the text.

## Revision History

The revision history for each chapter is listed at the end of the chapter. Most of these chapters were formerly included in device handbooks. Some were originally application notes or information included in device datasheets.

A "Summary of Changes" table at the end of this user's guide lists the chapters that were changed in each revision of the document, with links to the "List of Changes" sections for those chapters.

## Related Information

Refer to the *ProASIC3 nano Low Power Flash FPGAs* datasheet for detailed specifications, timing, and package and pin information.

The website for ProASIC3 nano devices is /www.microsemi.com/soc/products/pa3nano/default.aspx.

# 1 – FPGA Array Architecture in Low Power Flash Devices

## Device Architecture

### Advanced Flash Switch

Unlike SRAM FPGAs, the low power flash devices use a live-at-power-up ISP flash switch as their programming element. Flash cells are distributed throughout the device to provide nonvolatile, reconfigurable programming to connect signal lines to the appropriate VersaTile inputs and outputs. In the flash switch, two transistors share the floating gate, which stores the programming information (Figure 1-1). One is the sensing transistor, which is only used for writing and verification of the floating gate voltage. The other is the switching transistor. The latter is used to connect or separate routing nets, or to configure VersaTile logic. It is also used to erase the floating gate. Dedicated high-performance lines are connected as required using the flash switch for fast, low-skew, global signal distribution throughout the device core. Maximum core utilization is possible for virtually any design. The use of the flash switch technology also removes the possibility of firm errors, which are increasingly common in SRAM-based FPGAs.

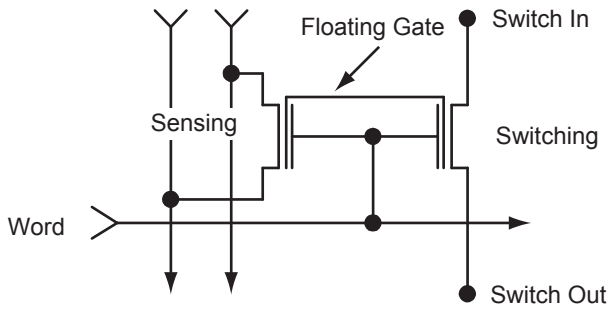


***Figure 1-1 •*** **Flash-Based Switch**

# FPGA Array Architecture Support

The flash FPGAs listed in Table 1-1 support the architecture features described in this document.

***Table 1-1* • Flash-Based FPGAs**

| Series | Family* | Description |
|---|---|---|
| IGLOO® | IGLOO | Ultra-low power 1.2 V to 1.5 V FPGAs with Flash*Freeze technology |
| | IGLOOe | Higher density IGLOO FPGAs with six PLLs and additional I/O standards |
| | IGLOO nano | The industry's lowest-power, smallest-size solution |
| | IGLOO PLUS | IGLOO FPGAs with enhanced I/O capabilities |
| ProASIC®3 | ProASIC3 | Low power, high-performance 1.5 V FPGAs |
| | ProASIC3E | Higher density ProASIC3 FPGAs with six PLLs and additional I/O standards |
| | ProASIC3 nano | Lowest-cost solution with enhanced I/O capabilities |
| | ProASIC3L | ProASIC3 FPGAs supporting 1.2 V to 1.5 V with Flash*Freeze technology |
| | RT ProASIC3 | Radiation-tolerant RT3PE600L and RT3PE3000L |
| | Military ProASIC3/EL | Military temperature A3PE600L, A3P1000, and A3PE3000L |
| | Automotive ProASIC3 | ProASIC3 FPGAs qualified for automotive applications |
| Fusion | Fusion | Mixed signal FPGA integrating ProASIC3 FPGA fabric, programmable analog block, support for ARM® Cortex™-M1 soft processors, and flash memory into a monolithic device |

*Note: *The device names link to the appropriate datasheet, including product brief, DC and switching characteristics, and packaging information.*

## *IGLOO Terminology*

In documentation, the terms IGLOO series and IGLOO devices refer to all of the IGLOO devices as listed in Table 1-1. Where the information applies to only one product line or limited devices, these exclusions will be explicitly stated.

## *ProASIC3 Terminology*

In documentation, the terms ProASIC3 series and ProASIC3 devices refer to all of the ProASIC3 devices as listed in Table 1-1. Where the information applies to only one product line or limited devices, these exclusions will be explicitly stated.

To further understand the differences between the IGLOO and ProASIC3 devices, refer to the *Industry's Lowest Power FPGAs Portfolio*.

# Device Overview

Low power flash devices consist of multiple distinct programmable architectural features (Figure 1-5 on page 13 through Figure 1-7 on page 14):

- FPGA fabric/core (VersaTiles)
- Routing and clock resources (VersaNets)
- FlashROM
- Dedicated SRAM and/or FIFO
  - 30 k gate and smaller device densities do not support SRAM or FIFO.
  - Automotive devices do not support FIFO operation.
- I/O structures
- Flash*Freeze technology and low power modes

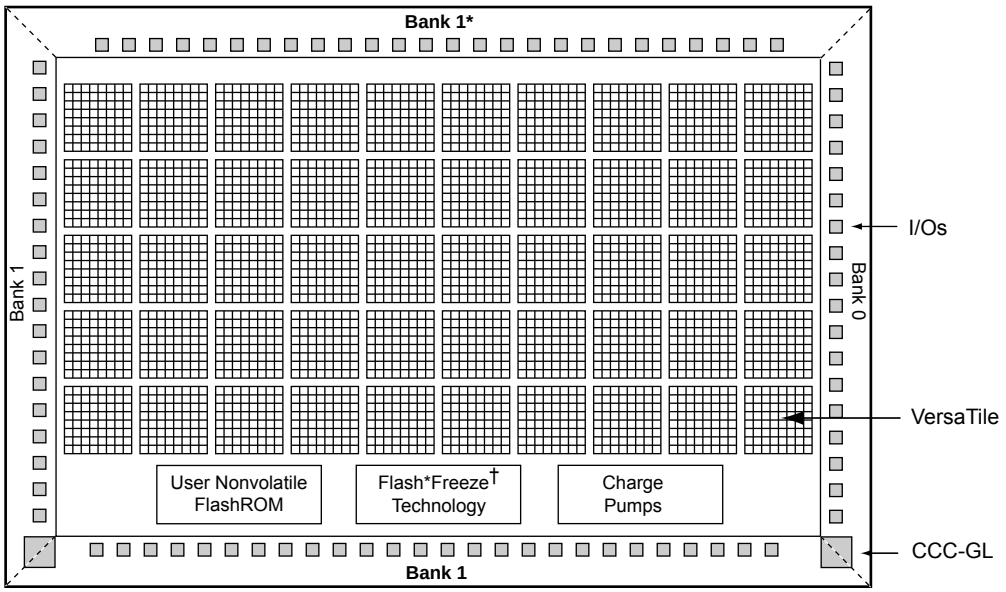


*Notes: * Bank 0 for the 30 k devices*
*† Flash*Freeze mode is supported on IGLOO devices.*

***Figure 1-2 •*** **IGLOO and ProASIC3 nano Device Architecture Overview with Two I/O Banks (applies to 10 k and 30 k device densities, excluding IGLOO PLUS devices)**

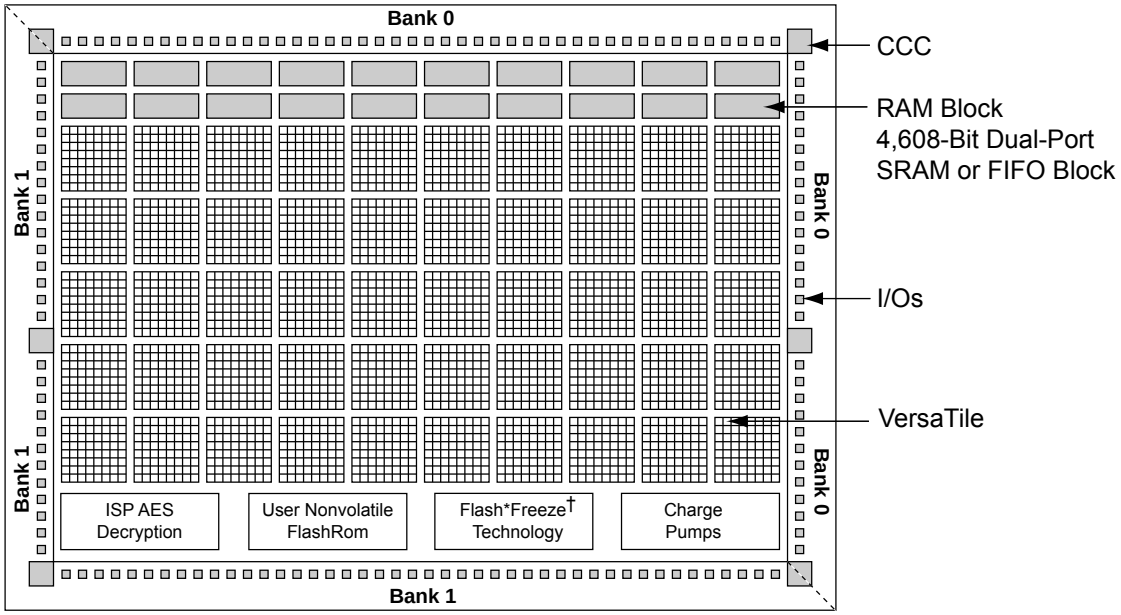


*Note:* † *Flash*Freeze mode is supported on IGLOO devices.*

***Figure 1-3 •*** **IGLOO Device Architecture Overview with Two I/O Banks with RAM and PLL (60 k and 125 k gate densities)**

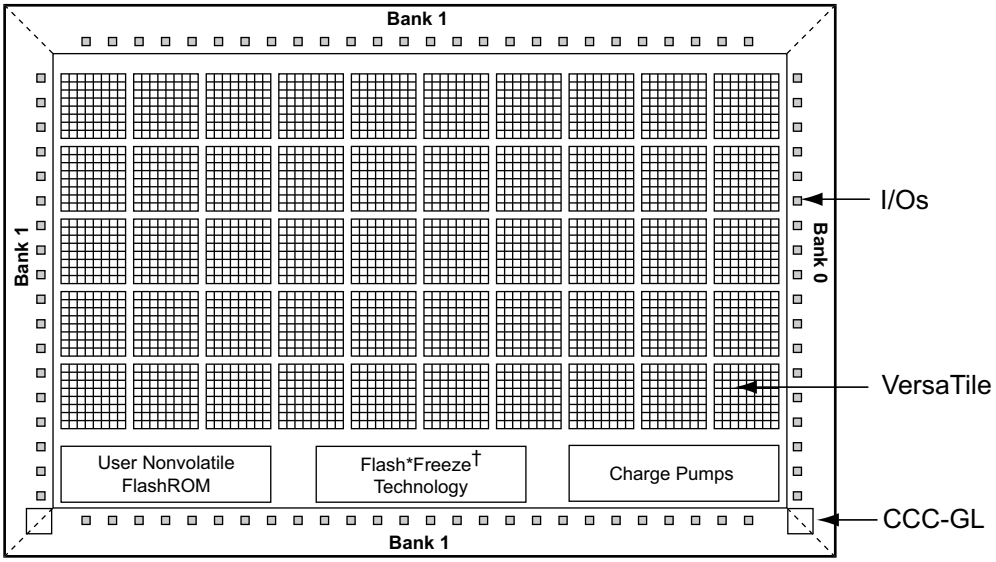


*Note:* † *Flash*Freeze mode is supported on IGLOO devices.*

***Figure 1-4 •*** **IGLOO Device Architecture Overview with Three I/O Banks (AGLN015, AGLN020, A3PN015, and A3PN020)**

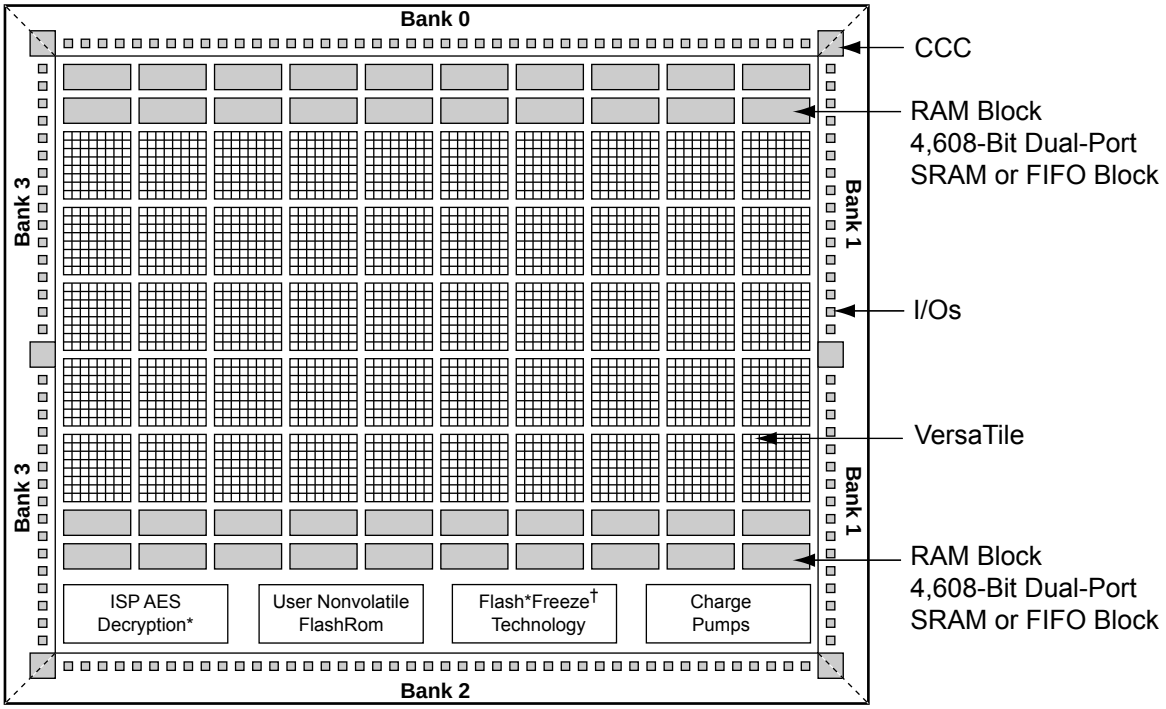


*Note: Flash*Freeze technology only applies to IGLOO and ProASIC3L families.*

***Figure 1-5 •*** **IGLOO, IGLOO nano, ProASIC3 nano, and ProASIC3/L Device Architecture Overview with Four I/O Banks (AGL600 device is shown)**

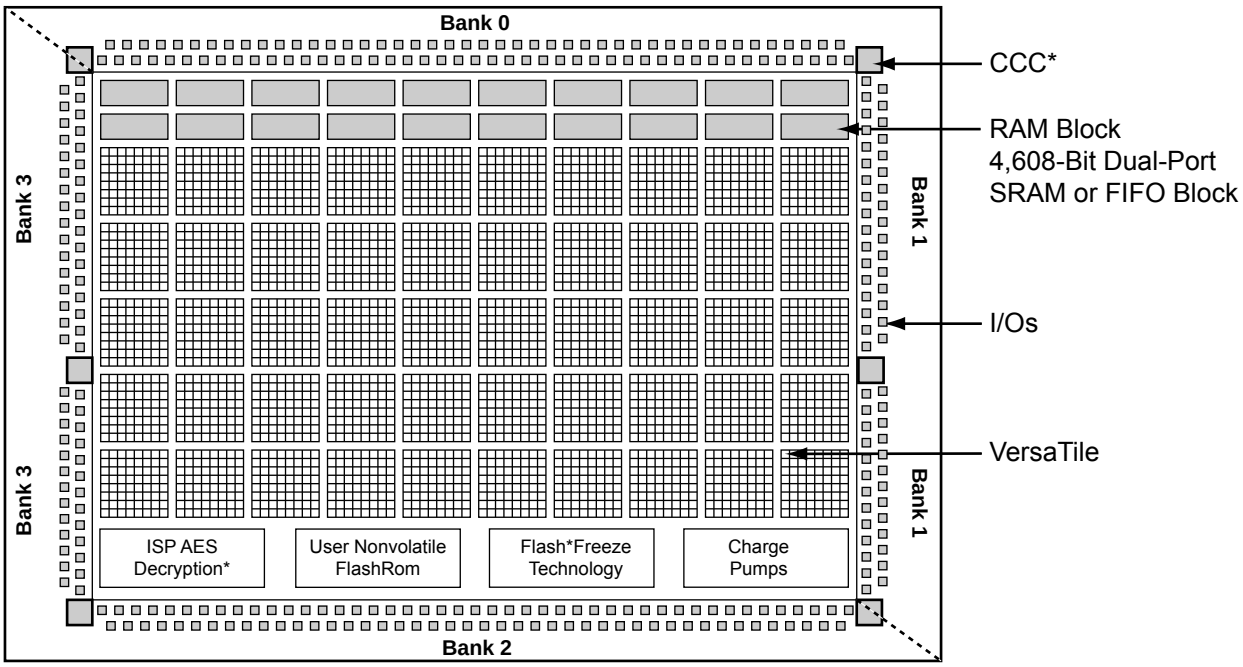


*Note: * AGLP030 does not contain a PLL or support AES security.*

***Figure 1-6 •*** **IGLOO PLUS Device Architecture Overview with Four I/O Banks**

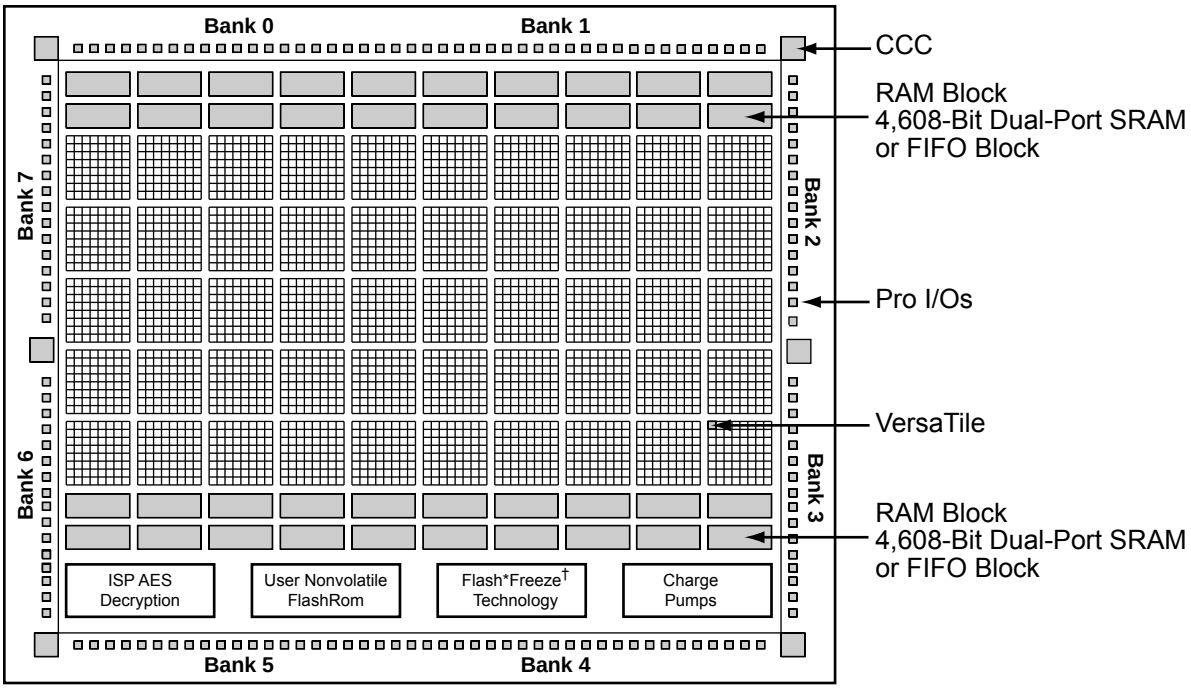


*Note: Flash*Freeze technology only applies to IGLOOe devices.*

***Figure 1-7 •*** **IGLOOe and ProASIC3E Device Architecture Overview (AGLE600 device is shown)**

## I/O State of Newly Shipped Devices

Devices are shipped from the factory with a test design in the device. The power-on switch for VCC is OFF by default in this test design, so I/Os are tristated by default. Tristated means the I/O is not actively driven and floats. The exact value cannot be guaranteed when it is floating. Even in simulation software, a tristate value is marked as unknown. Due to process variations and shifts, tristated I/Os may float toward High or Low, depending on the particular device and leakage level.

If there is concern regarding the exact state of unused I/Os, weak pull-up/pull-down should be added to the floating I/Os so their state is controlled and stabilized.

# Core Architecture

## *VersaTile*

The proprietary IGLOO and ProASIC3 device architectures provide granularity comparable to gate arrays. The device core consists of a sea-of-VersaTiles architecture.

As illustrated in Figure 1-8, there are four inputs in a logic VersaTile cell, and each VersaTile can be configured using the appropriate flash switch connections:

- Any 3-input logic function
- Latch with clear or set
- D-flip-flop with clear or set
- Enable D-flip-flop with clear or set (on a 4th input)

VersaTiles can flexibly map the logic and sequential gates of a design. The inputs of the VersaTile can be inverted (allowing bubble pushing), and the output of the tile can connect to high-speed, very-long-line routing resources. VersaTiles and larger functions can be connected with any of the four levels of routing hierarchy.

When the VersaTile is used as an enable D-flip-flop, SET/CLR is supported by a fourth input. The SET/CLR signal can only be routed to this fourth input over the VersaNet (global) network. However, if, in the user's design, the SET/CLR signal is not routed over the VersaNet network, a compile warning message will be given, and the intended logic function will be implemented by two VersaTiles instead of one.

The output of the VersaTile is F2 when the connection is to the ultra-fast local lines, or YL when the connection is to the efficient long-line or very-long-line resources.

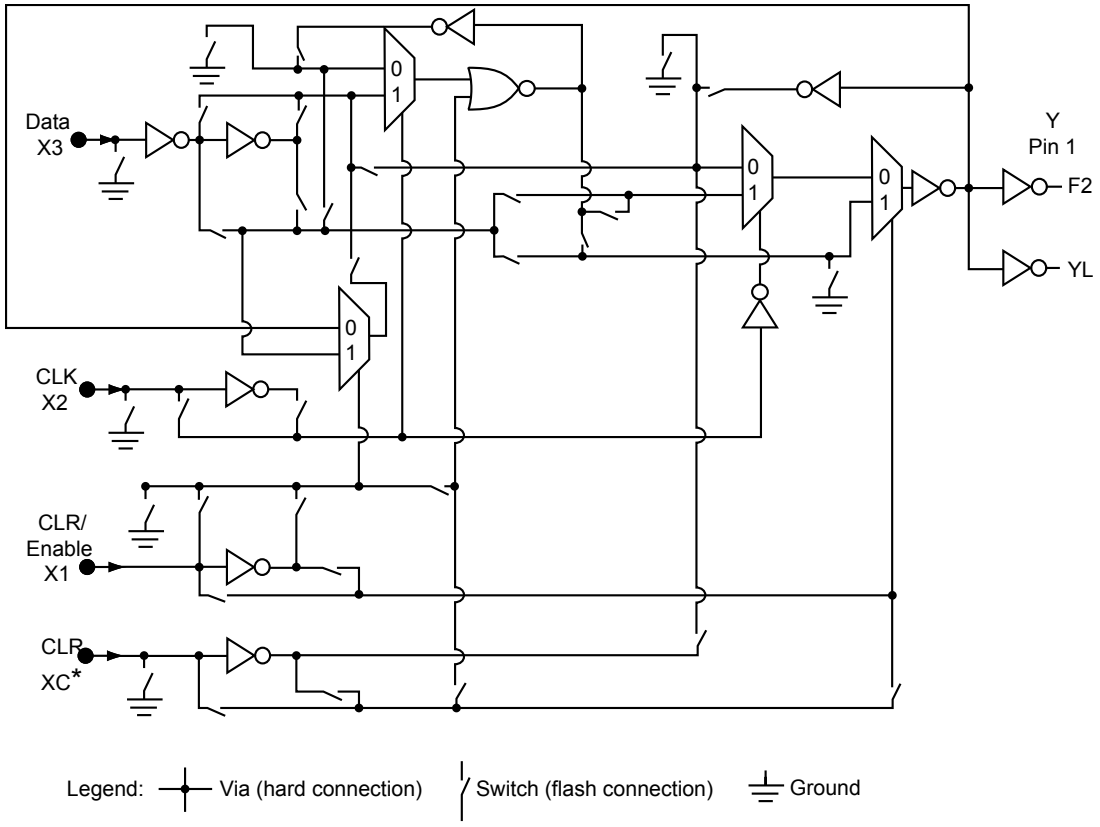


* *This input can only be connected to the global clock distribution network.*

***Figure 1-8 •*** **Low Power Flash Device Core VersaTile**

## Array Coordinates

During many place-and-route operations in the Microsemi Designer software tool, it is possible to set constraints that require array coordinates. Table 1-2 provides array coordinates of core cells and memory blocks for IGLOO and ProASIC3 devices. Table 1-3 provides the information for IGLOO PLUS devices. Table 1-4 on page 17 provides the information for IGLOO nano and ProASIC3 nano devices. The array coordinates are measured from the lower left (0, 0). They can be used in region constraints for specific logic groups/blocks, designated by a wildcard, and can contain core cells, memories, and I/Os.

I/O and cell coordinates are used for placement constraints. Two coordinate systems are needed because there is not a one-to-one correspondence between I/O cells and core cells. In addition, the I/O coordinate system changes depending on the die/package combination. It is not listed in Table 1-2. The Designer ChipPlanner tool provides the array coordinates of all I/O locations. I/O and cell coordinates are used for placement constraints. However, I/O placement is easier by package pin assignment.

Figure 1-9 on page 17 illustrates the array coordinates of a 600 k gate device. For more information on how to use array coordinates for region/placement constraints, see the *Designer User's Guide* or online help (available in the software) for software tools.

***Table 1-2* • IGLOO and ProASIC3 Array Coordinates**

| Device | | VersaTiles | | | | Memory Rows | | Entire Die | |
|---|---|---|---|---|---|---|---|---|---|
| | | Min. | | Max. | | Bottom | Top | Min. | Max. |
| **IGLOO** | **ProASIC3/ ProASIC3L** | **x** | **y** | **x** | **y** | **(x, y)** | **(x, y)** | **(x, y)** | **(x, y)** |
| AGL015 | A3P015 | 3 | 2 | 34 | 13 | None | None | (0, 0) | (37, 15) |
| AGL030 | A3P030 | 3 | 3 | 66 | 13 | None | None | (0, 0) | (69, 15) |
| AGL060 | A3P060 | 3 | 2 | 66 | 25 | None | (3, 26) | (0, 0) | (69, 29) |
| AGL125 | A3P125 | 3 | 2 | 130 | 25 | None | (3, 26) | (0, 0) | (133, 29) |
| AGL250 | A3P250/L | 3 | 2 | 130 | 49 | None | (3, 50) | (0, 0) | (133, 53) |
| AGL400 | A3P400 | 3 | 2 | 194 | 49 | None | (3, 50) | (0, 0) | (197, 53) |
| AGL600 | A3P600/L | 3 | 4 | 194 | 75 | (3, 2) | (3, 76) | (0, 0) | (197, 79) |
| AGL1000 | A3P1000/L | 3 | 4 | 258 | 99 | (3, 2) | (3, 100) | (0, 0) | (261, 103) |
| AGLE600 | A3PE600/L, RT3PE600L | 3 | 4 | 194 | 75 | (3, 2) | (3, 76) | (0, 0) | (197, 79) |
| | A3PE1500 | 3 | 4 | 322 | 123 | (3, 2) | (3, 124) | (0, 0) | (325, 127) |
| AGLE3000 | A3PE3000/L, RT3PE3000L | 3 | 6 | 450 | 173 | (3, 2) or (3, 4) | (3, 174) or (3, 176) | (0, 0) | (453, 179) |

***Table 1-3* • IGLOO PLUS Array Coordinates**

| Device | VersaTiles | | | | Memory Rows | | Entire Die | |
|---|---|---|---|---|---|---|---|---|
| | Min. | | Max. | | Bottom | Top | Min. | Max. |
| **IGLOO PLUS** | **x** | **y** | **x** | **y** | **(x, y)** | **(x, y)** | **(x, y)** | **(x, y)** |
| AGLP030 | 2 | 3 | 67 | 13 | None | None | (0, 0) | (69, 15) |
| AGLP060 | 2 | 2 | 67 | 25 | None | (3, 26) | (0, 0) | (69, 29) |
| AGLP125 | 2 | 2 | 131 | 25 | None | (3, 26) | (0, 0) | (133, 29) |

***Table 1-4* • IGLOO nano and ProASIC3 nano Array Coordinates**

| Device | | VersaTiles | | Memory Rows | | Entire Die | |
|---|---|---|---|---|---|---|---|
| | | Min. | Max. | Bottom | Top | Min. | Max. |
| **IGLOO nano** | **ProASIC3 nano** | **(x, y)** | **(x, y)** | **(x, y)** | **(x, y)** | **(x, y)** | **(x, y)** |
| AGLN010 | A3P010 | (0, 2) | (32, 5) | None | None | (0, 0) | (34, 5) |
| AGLN015 | A3PN015 | (0, 2) | (32, 9) | None | None | (0, 0) | (34, 9) |
| AGLN020 | A3PN020 | (0, 2) | 32, 13) | None | None | (0, 0) | (34, 13) |
| AGLN060 | A3PN060 | (3, 2) | (66, 25) | None | (3, 26) | (0, 0) | (69, 29) |
| AGLN125 | A3PN125 | (3, 2) | (130, 25) | None | (3, 26) | (0, 0) | (133, 29) |
| AGLN250 | A3PN250 | (3, 2) | (130, 49) | None | (3, 50) | (0, 0) | (133, 49) |

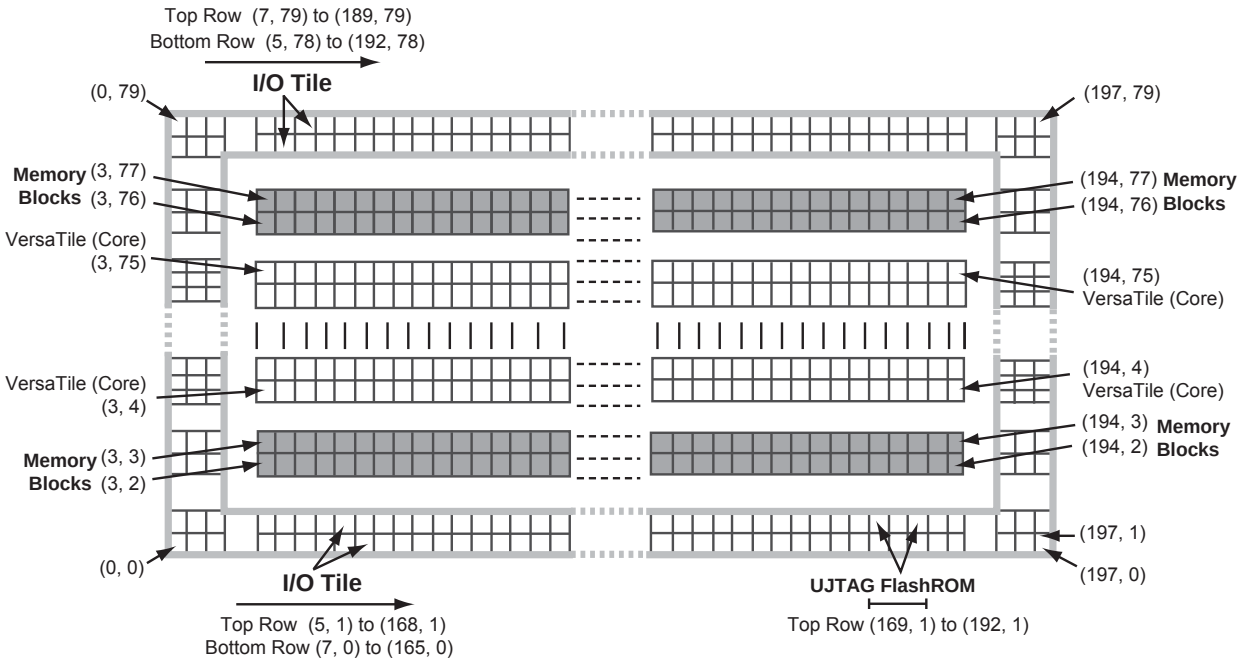


*Note: The vertical I/O tile coordinates are not shown. West-side coordinates are {(0, 2) to (2, 2)} to {(0, 77) to (2, 77)}; east-side coordinates are {(195, 2) to (197, 2)} to {(195, 77) to (197, 77)}.*

***Figure 1-9* • Array Coordinates for AGL600, AGLE600, A3P600, and A3PE600**

## Routing Architecture

The routing structure of low power flash devices is designed to provide high performance through a flexible four-level hierarchy of routing resources: ultra-fast local resources; efficient long-line resources; high-speed, very-long-line resources; and the high-performance VersaNet networks.

The ultra-fast local resources are dedicated lines that allow the output of each VersaTile to connect directly to every input of the eight surrounding VersaTiles (Figure 1-10). The exception to this is that the SET/CLR input of a VersaTile configured as a D-flip-flop is driven only by the VersaTile global network.

The efficient long-line resources provide routing for longer distances and higher-fanout connections. These resources vary in length (spanning one, two, or four VersaTiles), run both vertically and horizontally, and cover the entire device (Figure 1-11 on page 19). Each VersaTile can drive signals onto the efficient long-line resources, which can access every input of every VersaTile. Routing software automatically inserts active buffers to limit loading effects.

The high-speed, very-long-line resources, which span the entire device with minimal delay, are used to route very long or high-fanout nets: length ±12 VersaTiles in the vertical direction and length ±16 in the horizontal direction from a given core VersaTile (Figure 1-12 on page 19). Very long lines in low power flash devices have been enhanced over those in previous ProASIC families. This provides a significant performance boost for long-reach signals.

The high-performance VersaNet global networks are low-skew, high-fanout nets that are accessible from external pins or internal logic. These nets are typically used to distribute clocks, resets, and other high-fanout nets requiring minimum skew. The VersaNet networks are implemented as clock trees, and signals can be introduced at any junction. These can be employed hierarchically, with signals accessing every input of every VersaTile. For more details on VersaNets, refer to the "Global Resources in Low Power Flash Devices" section on page 31.

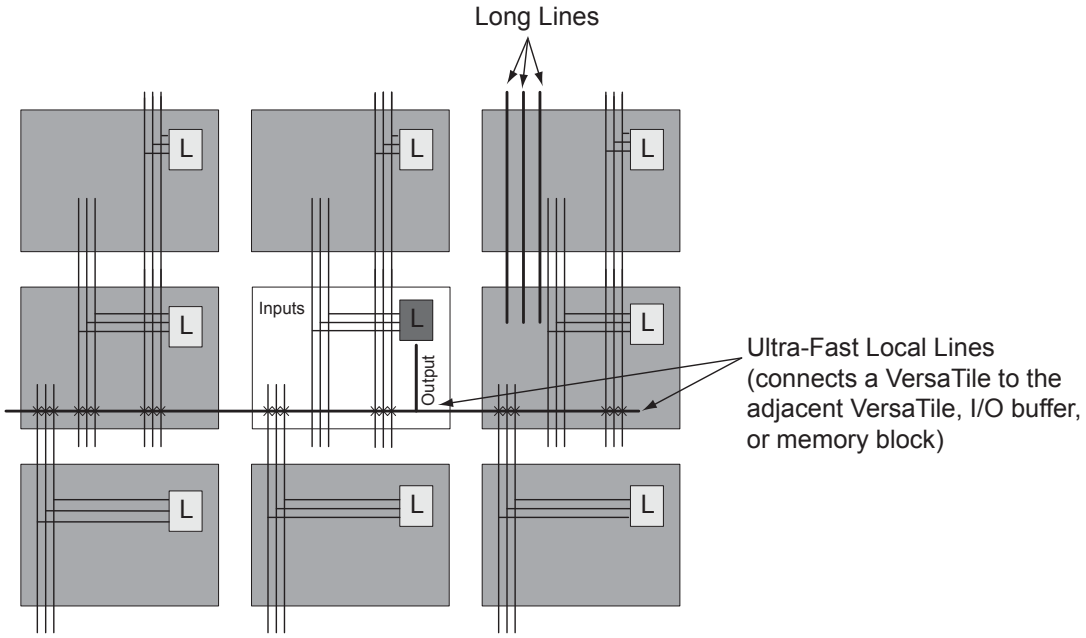


*Note: Input to the core cell for the D-flip-flop set and reset is only available via the VersaNet global network connection.*

***Figure 1-10* • Ultra-Fast Local Lines Connected to the Eight Nearest Neighbors**

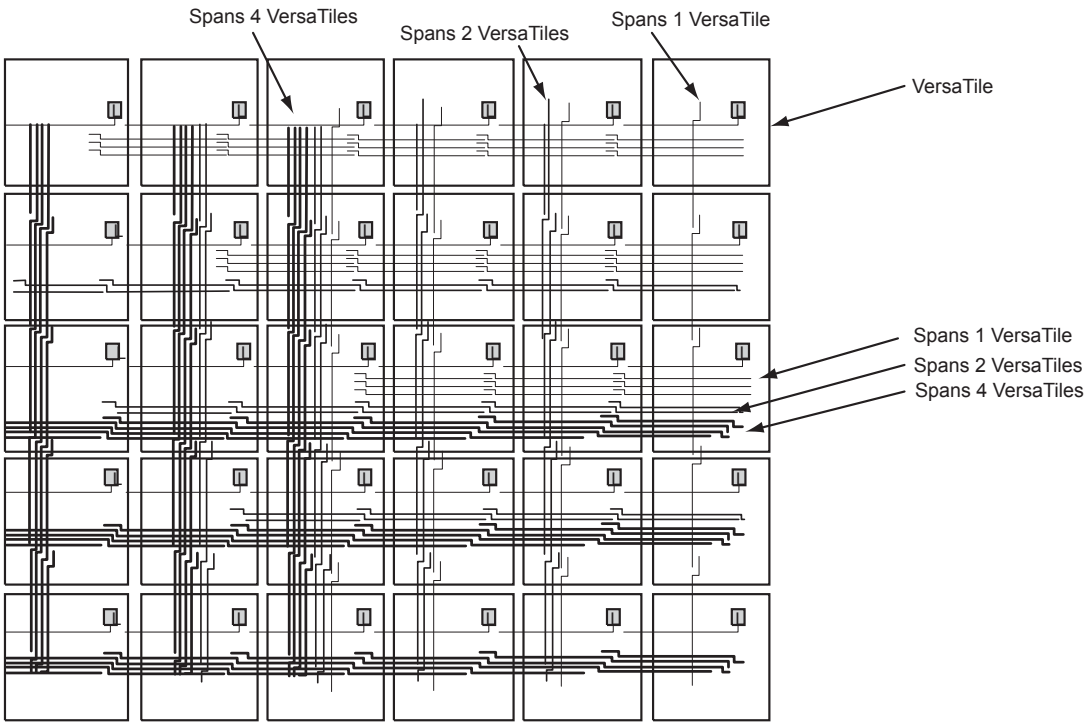


***Figure 1-11*** **• Efficient Long-Line Resources**

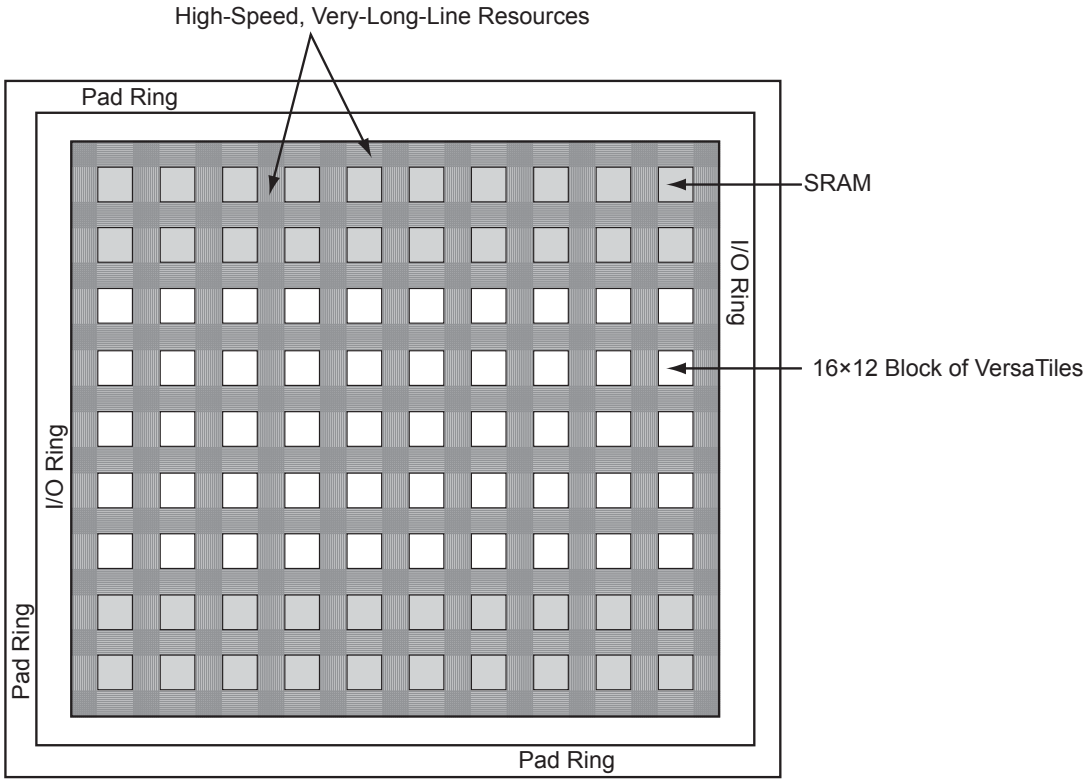


***Figure 1-12*** **• Very-Long-Line Resources**

# Related Documents

## User's Guides

*Designer User's Guide*

http://www.microsemi.com/soc/documents/designer_ug.pdf

# List of Changes

The following table lists critical changes that were made in each revision of the chapter.

| Date | Changes | Page |
|---|---|---|
| August 2012 | The "I/O State of Newly Shipped Devices" section is new (SAR 39542). | 14 |
| July 2010 | This chapter is no longer published separately with its own part number and version but is now part of several FPGA fabric user's guides. | N/A |
| v1.4 (December 2008) | IGLOO nano and ProASIC3 nano devices were added to Table 1-1 • Flash-Based FPGAs. | 10 |
| | Figure 1-2 • IGLOO and ProASIC3 nano Device Architecture Overview with Two I/O Banks (applies to 10 k and 30 k device densities, excluding IGLOO PLUS devices) through Figure 1-5 • IGLOO, IGLOO nano, ProASIC3 nano, and ProASIC3/L Device Architecture Overview with Four I/O Banks (AGL600 device is shown) are new. | 11, 12 |
| | Table 1-4 • IGLOO nano and ProASIC3 nano Array Coordinates is new. | 17 |
| v1.3 (October 2008) | The title of this document was changed from "Core Architecture of IGLOO and ProASIC3 Devices" to "FPGA Array Architecture in Low Power Flash Devices." | 9 |
| | The "FPGA Array Architecture Support" section was revised to include new families and make the information more concise. | 10 |
| | Table 1-2 • IGLOO and ProASIC3 Array Coordinates was updated to include Military ProASIC3/EL and RT ProASIC3 devices. | 16 |
| v1.2 (June 2008) | The following changes were made to the family descriptions in Table 1-1 • Flash-Based FPGAs:<br>• ProASIC3L was updated to include 1.5 V.<br>• The number of PLLs for ProASIC3E was changed from five to six. | 10 |
| v1.1 (March 2008) | Table 1-1 • Flash-Based FPGAs and the accompanying text was updated to include the IGLOO PLUS family. The "IGLOO Terminology" section and "Device Overview" section are new. | 10 |
| | The "Device Overview" section was updated to note that 15 k devices do not support SRAM or FIFO. | 11 |
| | Figure 1-6 • IGLOO PLUS Device Architecture Overview with Four I/O Banks is new. | 13 |
| | Table 1-2 • IGLOO and ProASIC3 Array Coordinates was updated to add A3P015 and AGL015. | 16 |
| | Table 1-3 • IGLOO PLUS Array Coordinates is new. | 16 |

# 2 – Low Power Modes in ProASIC3/E and ProASIC3 nano FPGAs

## Introduction

The demand for low power systems and semiconductors, combined with the strong growth observed for value-based FPGAs, is driving growing demand for low power FPGAs. For portable and battery-operated applications, power consumption has always been the greatest challenge. The battery life of a system and on-board devices has a direct impact on the success of the product. As a result, FPGAs used in these applications should meet low power consumption requirements.

ProASIC®3/E and ProASIC3 nano FPGAs offer low power consumption capability inherited from their nonvolatile and live-at-power-up (LAPU) flash technology. This application note describes the power consumption and how to use different power saving modes to further reduce power consumption for power-conscious electronics design.

## Power Consumption Overview

In evaluating the power consumption of FPGA technologies, it is important to consider it from a system point of view. Generally, the overall power consumption should be based on static, dynamic, inrush, and configuration power. Few FPGAs implement ways to reduce static power consumption utilizing sleep modes.

SRAM-based FPGAs use volatile memory for their configuration, so the device must be reconfigured after each power-up cycle. Moreover, during this initialization state, the logic could be in an indeterminate state, which might cause inrush current and power spikes. More complex power supplies are required to eliminate potential system power-up failures, resulting in higher costs. For portable electronics requiring frequent power-up and -down cycles, this directly affects battery life, requiring more frequent recharging or replacement.

$$\text{SRAM-Based FPGA Total Power Consumption} = P_{static} + P_{dynamic} + P_{inrush} + P_{config} \quad \textit{EQ 1}$$

$$\text{ProASIC3/E Total Power Consumption} = P_{static} + P_{dynamic} \quad \textit{EQ 2}$$

Unlike SRAM-based FPGAs, Microsemi flash-based FPGAs are nonvolatile and do not require power-up configuration. Additionally, Microsemi nonvolatile flash FPGAs are live at power-up and do not require additional support components. Total power consumption is reduced as the inrush current and configuration power components are eliminated.

Note that the static power component can be reduced in flash FPGAs (such as the ProASIC3/E devices) by entering User Low Static mode or Sleep mode. This leads to an extremely low static power component contribution to the total system power consumption.

The following sections describe the usage of Static (Idle) mode to reduce the power component, User Low Static mode to reduce the static power component, and Sleep mode and Shutdown mode to achieve a range of power consumption when the FPGA or system is idle. Table 2-1 on page 22 summarizes the different low power modes offered by ProASIC3/E devices.

***Table 2-1* • ProASIC3/E/nano Low Power Modes Summary**

| Mode | Power Supplies / Clock Status | Needed to Start Up |
|---|---|---|
| Active | On – All, clock<br>Off – None | N/A (already active) |
| Static (Idle) | On – All<br>Off – No active clock in FPGA<br>Optional: Enter User Low Static (Idle) Mode by enabling ULSICC macro to further reduce power consumption by powering down FlashROM. | Initiate clock source.<br>No need to initialize volatile contents. |
| Sleep | On – VCCI<br>Off – VCC (core voltage), VJTAG (JTAG DC voltage), and VPUMP (programming voltage)<br>LAPU enables immediate operation when power returns.<br>Optional: Save state of volatile contents in external memory. | Need to turn on core.<br>Load states from external memory.<br>As needed, restore volatile contents from external memory. |
| Shutdown | On – None<br>Off – All power supplies<br>Applicable to all ProASIC3 nano devices, cold-sparing and hot-insertion allow the device to be powered down without bringing down the system. LAPU enables immediate operation when power returns. | Need to turn on VCC, VCCI. |

# Static (Idle) Mode

In Static (Idle) mode, the clock inputs are not switching and the static power consumption is the minimum power required to keep the device powered up. In this mode, I/Os are only drawing the minimum leakage current specified in the datasheet. Also, in Static (Idle) mode, embedded SRAM, I/Os, and registers retain their values, so the device can enter and exit this mode without any penalty.

If the embedded PLLs are used as the clock source, Static (Idle) mode can be entered easily by pulling LOW the PLL POWERDOWN pin (active-low). By pulling the PLL POWERDOWN pin to LOW, the PLL is turned off. Refer to Figure 2-1 on page 23 for more information.

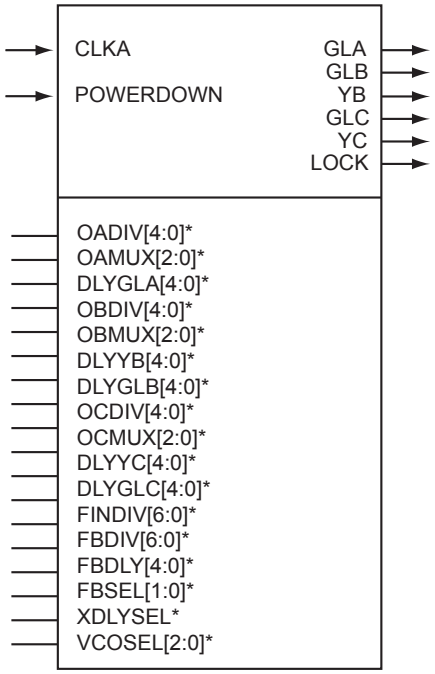


***Figure 2-1* • CCC/PLL Macro**

# User Low Static (Idle) Mode

User Low Static (Idle) mode is an advanced feature supported by ProASIC3/E devices to reduce static (idle) power consumption. Entering and exiting this mode is made possible using the ULSICC macro by setting its value to disable/enable the User Low Static (Idle) mode. Under typical operating conditions, characterization results show up to 25% reduction of the static (idle) power consumption. The greatest power savings in terms of percentage are seen in the smaller members of the ProASIC3 family. The active-high control signal for User Low Static (Idle) mode can be generated by internal or external logic. When the device is operating in User Low Static (Idle) mode, FlashROM functionality is temporarily disabled to save power. If FlashROM functionality is needed, the device can exit User Low Static mode temporarily and re-enter the mode once the functionality is no longer needed.

To utilize User Low Static (Idle) mode, simply instantiate the ULSICC macro (Table 2-2 on page 24) in your design, and connect the input port to either an internal logic signal or a device package pin, as illustrated in Figure 2-2 on page 24 or Figure 2-3 on page 25, respectively. The attribute is used so the Synplify® synthesis tool will not optimize the instance with no output port.

This mode can be used to lower standard static (idle) power consumption when the FlashROM feature is not needed. Configuring the device to enter User Low Static (Idle) mode is beneficial when the FPGA enters and exits static mode frequently and lowering power consumption as much as possible is desired. The device is still functional, and data is retained in this state so the device can enter and exit this mode quickly, resulting in reduced total power consumption. The device can also stay in User Low Static mode when the FlashROM feature is not used in the device.

***Table 2-2* • Using ULSICC Macro***

| VHDL | Verilog |
|---|---|
| `COMPONENT ULSICC`<br>`  port (`<br>`  LSICC  : in  STD_ULOGIC);`<br>`END COMPONENT;`<br><br>Example:<br>`COMPONENT ULSICC`<br>`  port (`<br>`  LSICC  : in  STD_ULOGIC);`<br>`END COMPONENT;`<br><br>`attribute syn_noprune : boolean;`<br>`attribute syn_noprune of u1 : label is true;`<br>`u1: ULSICC port map(myInputSignal);` | `module ULSICC(LSICC);`<br>` input LSICC;`<br>`endmodule`<br><br>Example:<br>`ULSICC U1(.LSICC(myInputSignal))`<br>`/* synthesis syn_noprune=1 */;` |

*Note: *Supported in Libero® software v7.2 and newer versions.*

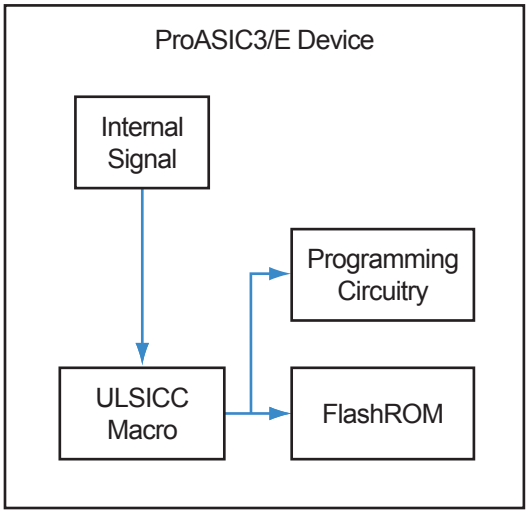


***Figure 2-2* • User Low Static (Idle) Mode Application—Internal Control Signal**

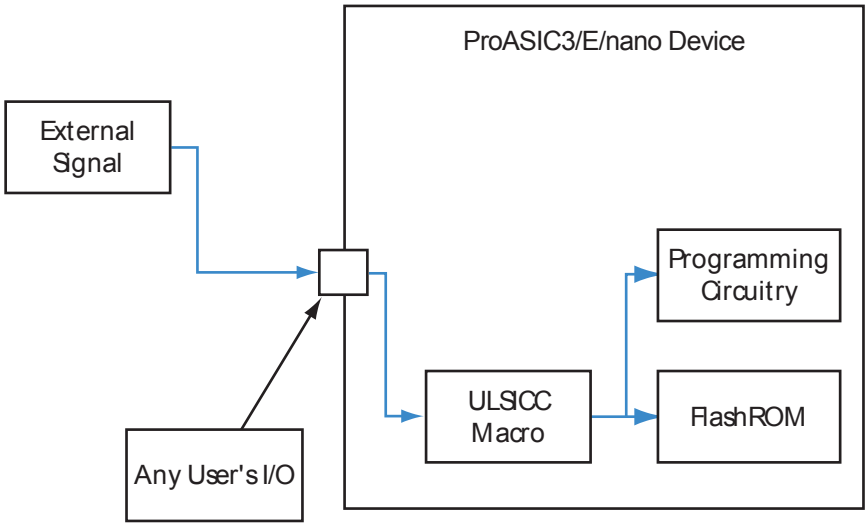


***Figure 2-3*** **• User Low Static (Idle) Mode Application—External Control Signal**

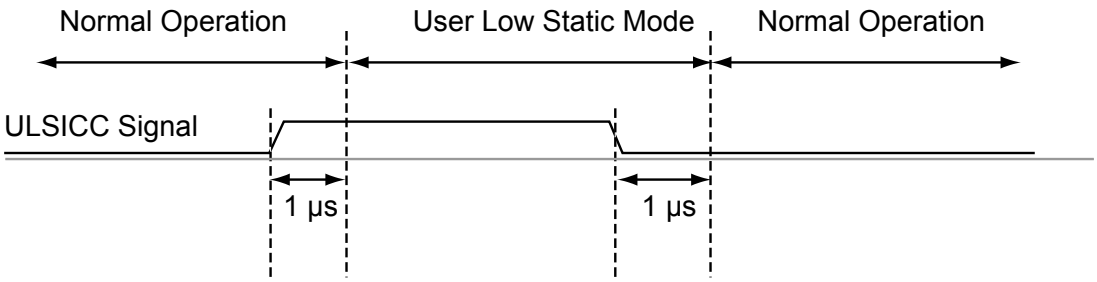


***Figure 2-4*** **• User Low Static (Idle) Mode Timing Diagram**

# Sleep Mode

ProASIC3/E and ProASIC3 nano FPGAs support Sleep mode when device functionality is not required. In Sleep mode, the VCC (core voltage), VJTAG (JTAG DC voltage), and VPUMP (programming voltage) are grounded, resulting in the FPGA core being turned off to reduce power consumption. While the ProASIC3/E device is in Sleep mode, the rest of the system is still operating and driving the input buffers of the ProASIC3/E device. The driven inputs do not pull up power planes, and the current draw is limited to a minimal leakage current.

Table 2-3 shows the status of the power supplies in Sleep mode. When a power supply is powered off, the corresponding power pin can be left floating or grounded.

***Table 2-3*** **• Sleep Mode—Power Supply Requirements for ProASIC3/E/nano Devices**

| Power Supplies | ProASIC3/E/nano Device |
|---|---|
| VCC | Powered off |
| VCCI = VMV | Powered on |
| VJTAG | Powered off |
| VPUMP | Powered off |

Table 2-4 shows the current draw in Sleep mode for an A3P250 device with the following test conditions: VCCI = VMV; VCC = VJTAG = VPUMP = GND.

***Table 2-4* • A3P250 Current Draw in Sleep Mode**

| Typical Conditions | A3P250 | |
|---|---|---|
| | $I_{CCI}$ (µA) | $I_{CCI}$ (µA) per Bank |
| VCCI = 3.3 V | 31.57 | 7.89 |
| VCCI = 2.5 V | 23.96 | 5.99 |
| VCCI = 1.8 V | 17.32 | 4.33 |
| VCCI = 1.5 V | 14.46 | 3.62 |
| $I_{CC}$ FPGA Core | 0.0 | 0.0 |
| Leakage Current per I/O | 0.1 | 0.1 |
| VPUMP | 0.0 | 0.0 |

*Note: The data in this table were taken under typical conditions and are based on characterization. The data is not guaranteed.*

Table 2-5 shows the current draw in Sleep mode for an A3PE600 device with the following test conditions: VCCI = VMV; VCC = VJTAG = VPUMP = GND.

***Table 2-5* • A3PE600 Current Draw in Sleep Mode**

| Typical Conditions | A3PE600 | |
|---|---|---|
| | $I_{CCI}$ (µA) | $I_{CCI}$ (µA) per Bank |
| VCCI = 3.3 V | 59.85 | 7.48 |
| VCCI = 2.5 V | 45.50 | 5.69 |
| VCCI = 1.8 V | 32.98 | 4.12 |
| VCCI = 1.5 V | 27.66 | 3.46 |
| VCCI = 0 V or Floating | 0.0 | 0.0 |
| $I_{CC}$ FPGA Core | 0.0 | 0.0 |
| Leakage Current per I/O | 0.1 | 0.1 |
| $I_{PUMP}$ | 0.0 | 0.0 |

*Note: The data in this table were taken under typical conditions and are based on characterization. The data is not guaranteed.*

ProASIC3/E and ProASIC3 nano devices were designed such that before device power-up, all I/Os are in tristate mode. The I/Os will remain tristated during power-up until the last voltage supply (VCC or VCCI) is powered to its functional level. After the last supply reaches the functional level, the outputs will exit the tristate mode and drive the logic at the input of the output buffer. The behavior of user I/Os is independent of the VCC and VCCI sequence or the state of other FPGA voltage supplies (VPUMP and VJTAG). During power-down, device I/Os become tristated once the first power supply (VCC or VCCI) drops below its brownout voltage level. The I/O behavior during power-down is also independent of voltage supply sequencing.

Figure 2-5 on page 27 shows a timing diagram for the FPGA core entering the activation and deactivation trip points for a typical application when the VCC power supply ramp rate is 100 µs (ramping from 0 V to 1.5 V). This is, in fact, the timing diagram for the FPGA entering and exiting Sleep mode, as it is dependent on powering down or powering up VCC. Depending on the ramp rate of the power supply and board-level configurations, the user can easily calculate how long it takes for the core to become active or inactive. For more information, refer to the "Power-Up/-Down Behavior of Low Power Flash Devices" section on page 307.

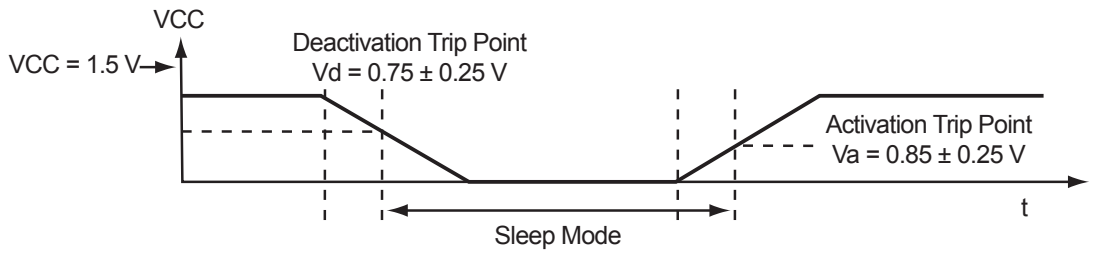


***Figure 2-5*** **• Entering and Exiting Sleep Mode—Typical Timing Diagram**

# Shutdown Mode

For all ProASIC3/E and ProASIC3 nano devices, shutdown mode can be entered by turning off all power supplies when device functionality is not needed. Cold-sparing and hot-insertion features in ProASIC3 nano devices enable the device to be powered down without turning off the entire system. When power returns, the live at power-up feature enables immediate operation of the device.

## Using Sleep Mode or Shutdown Mode in the System

Depending on the power supply and components used in an application, there are many ways to turn the power supplies connected to the device on or off. For example, Figure 2-6 shows how a microprocessor is used to control a power FET. It is recommended that power FETs with low on resistance be used to perform the switching action.

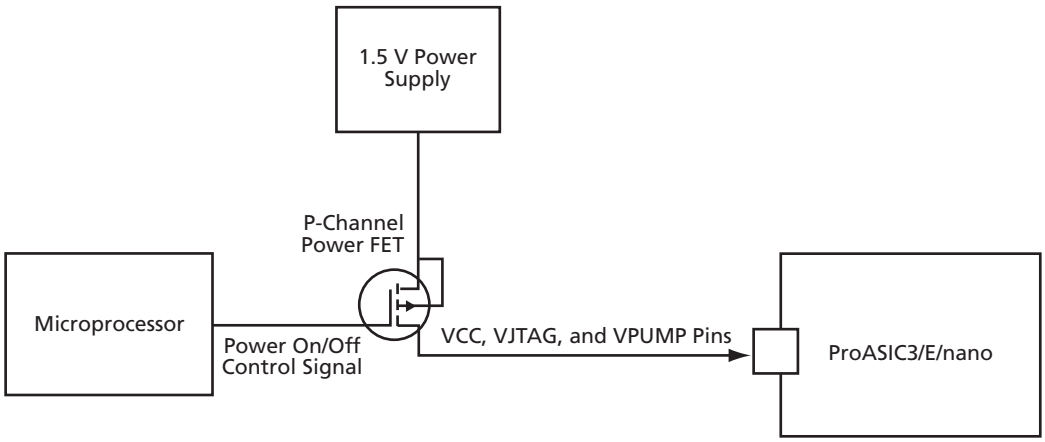


***Figure 2-6*** **• Controlling Power On/Off State Using Microprocessor and Power FET**

Alternatively, Figure 2-7 shows how a microprocessor can be used with a voltage regulator's shutdown pin to turn the power supplies connected to the device on or off.

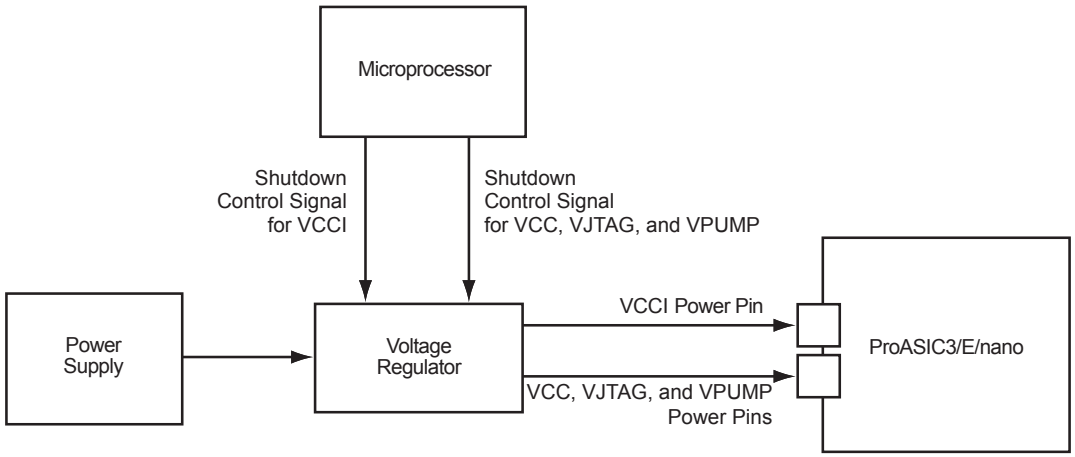


***Figure 2-7* • Controlling Power On/Off State Using Microprocessor and Voltage Regulator**

Though Sleep mode or Shutdown mode can be used to save power, the content of the SRAM and the state of the registers is lost when power is turned off if no other measure is taken. To keep the original contents of the device, a low-cost external serial EEPROM can be used to save and restore the device contents when entering and exiting Sleep mode. In the *Embedded SRAM Initialization Using External Serial EEPROM* application note, detailed information and a reference design are provided to initialize the embedded SRAM using an external serial EEPROM. The user can easily customize the reference design to save and restore the FPGA state when entering and exiting Sleep mode. The microcontroller will need to manage this activity, so before powering down VCC, the data must be read from the FPGA and stored externally. Similarly, after the FPGA is powered up, the microcontroller must allow the FPGA to load the data from external memory and restore its original state.

# Conclusion

Microsemi ProASIC3/E and ProASIC3 nano FPGAs inherit low power consumption capability from their nonvolatile and live-at-power-up flash-based technology. Power consumption can be reduced further using the Static (Idle), User Low Static (Idle), Sleep, or Shutdown power modes. All these features result in a low-power, cost-effective, single-chip solution designed specifically for power-sensitive electronics applications.

# Related Documents

## Application Notes

*Embedded SRAM Initialization Using External Serial EEPROM*

http://www.microsemi.com/soc/documents/EmbeddedSRAMInit_AN.pdf

# List of Changes

The following table lists critical changes that were made in each revision of the chapter.

| Date | Changes | Page |
|---|---|---|
| June 2011 | Table 2-1 • ProASIC3/E/nano Low Power Modes Summary and the "Shutdown Mode" section were revised to remove reference to ProASIC3/E devices (SAR 24526). | 22, 27 |
| July 2010 | This chapter is no longer published separately with its own part number and version but is now part of several FPGA fabric user's guides. | N/A |
| v1.2 (August 2008) | References to ProASIC3 nano devices were added to the document where appropriate. | N/A |
| | VJTAG and VPUMP were noted as "Off" in the Sleep Mode section of Table 2-1 • ProASIC3/E/nano Low Power Modes Summary. | 22 |
| | The "Sleep Mode" section, including Table 2-3 • Sleep Mode—Power Supply Requirements for ProASIC3/E/nano Devices, was revised to state that VJTAG and VPUMP are powered off during Sleep mode. | 25 |
| | The text above Table 2-4 • A3P250 Current Draw in Sleep Mode and Table 2-5 • A3PE600 Current Draw in Sleep Mode was revised to state "VCC = VJTAG = VPUMP = GND." | 26 |
| | Figure 2-6 • Controlling Power On/Off State Using Microprocessor and Power FET and Figure 2-7 • Controlling Power On/Off State Using Microprocessor and Voltage Regulator were revised to show shutdown of VJTAG and VPUMP during Sleep mode. | 27, 28 |
| v1.1 (March 2008) | The part number for this document was changed from 51700094-002-0 to 51700094-003-1. | N/A |
| v1.0 (January 2008) | The Power Supplies / Clock Status description was updated for Static (Idle) in Table 2-1 • ProASIC3/E/nano Low Power Modes Summary. | 22 |
| | Programming information was updated in the "User Low Static (Idle) Mode" section. | 23 |
| 51900138-2/10.06 | The "User Low Static (Idle) Mode" section was updated to include information about allowing programming in the ULSICC mode. | 23 |
| | Figure 2-2 • User Low Static (Idle) Mode Application—Internal Control Signal was updated. | 24 |
| | Figure 2-3 • User Low Static (Idle) Mode Application—External Control Signal was updated. | 25 |
| 51900138-1/6.06 | In Table 2-4 • A3P250 Current Draw in Sleep Mode, "VCCI = 1.5 V" was changed from 3.6158 to 3.62. | 26 |
| | In Table 2-5 • A3PE600 Current Draw in Sleep Mode, "VCCI = 2.5 V" was changed from 5.6875 to 3.69. | 26 |

# 3 – Global Resources in Low Power Flash Devices

## Introduction

IGLOO, Fusion, and ProASIC3 FPGA devices offer a powerful, low-delay VersaNet global network scheme and have extensive support for multiple clock domains. In addition to the Clock Conditioning Circuits (CCCs) and phase-locked loops (PLLs), there is a comprehensive global clock distribution network called a VersaNet global network. Each logical element (VersaTile) input and output port has access to these global networks. The VersaNet global networks can be used to distribute low-skew clock signals or high-fanout nets. In addition, these highly segmented VersaNet global networks contain spines (the vertical branches of the global network tree) and ribs that can reach all the VersaTiles inside their region. This allows users the flexibility to create low-skew local clock networks using spines. This document describes VersaNet global networks and discusses how to assign signals to these global networks and spines in a design flow. Details concerning low power flash device PLLs are described in the "Clock Conditioning Circuits in Low Power Flash Devices and Mixed Signal FPGAs" section on page 61. This chapter describes the low power flash devices' global architecture and uses of these global networks in designs.

## Global Architecture

Low power flash devices offer powerful and flexible control of circuit timing through the use of global circuitry. Each chip has up to six CCCs, some with PLLs.

- In IGLOOe, ProASIC3EL, and ProASIC3E devices, all CCCs have PLLs—hence, 6 PLLs per device (except the PQ208 package, which has only 2 PLLs).
- In IGLOO, IGLOO nano, IGLOO PLUS, ProASIC3, and ProASIC3L devices, the west CCC contains a PLL core (except in 10 k through 30 k devices).
- In Fusion devices, the west CCC also contains a PLL core. In the two larger devices (AFS600 and AFS1500), the west and east CCCs each contain a PLL.

Refer to Table 4-6 on page 84 for details. Each PLL includes delay lines, a phase shifter (0°, 90°, 180°, 270°), and clock multipliers/dividers. Each CCC has all the circuitry needed for the selection and interconnection of inputs to the VersaNet global network. The east and west CCCs each have access to three chip global lines on each side of the chip (six chip global lines total). The CCCs at the four corners each have access to three quadrant global lines in each quadrant of the chip (except in 10 k through 30 k gate devices).

The nano 10 k, 15 k, and 20 k devices support four VersaNet global resources, and 30 k devices support six global resources. The 10 k through 30 k devices have simplified CCCs called CCC-GLs.

The flexible use of the VersaNet global network allows the designer to address several design requirements. User applications that are clock-resource-intensive can easily route external or gated internal clocks using VersaNet global routing networks. Designers can also drastically reduce delay penalties and minimize resource usage by mapping critical, high-fanout nets to the VersaNet global network.

Note: Microsemi recommends that you choose the appropriate global pin and use the appropriate global resource so you can realize these benefits.

The following sections give an overview of the VersaNet global network, the structure of the global network, access point for the global networks, and the clock aggregation feature that enables a design to have very low clock skew using spines.

# Global Resource Support in Flash-Based Devices

The flash FPGAs listed in Table 3-1 support the global resources and the functions described in this document.

***Table 3-1* • Flash-Based FPGAs**

| Series | Family* | Description |
|---|---|---|
| IGLOO | IGLOO | Ultra-low power 1.2 V to 1.5 V FPGAs with Flash*Freeze technology |
| | IGLOOe | Higher density IGLOO FPGAs with six PLLs and additional I/O standards |
| | IGLOO PLUS | IGLOO FPGAs with enhanced I/O capabilities |
| | IGLOO nano | The industry's lowest-power, smallest-size solution |
| ProASIC3 | ProASIC3 | Low power, high-performance 1.5 V FPGAs |
| | ProASIC3E | Higher density ProASIC3 FPGAs with six PLLs and additional I/O standards |
| | ProASIC3 nano | Lowest-cost solution with enhanced I/O capabilities |
| | ProASIC3L | ProASIC3 FPGAs supporting 1.2 V to 1.5 V with Flash*Freeze technology |
| | RT ProASIC3 | Radiation-tolerant RT3PE600L and RT3PE3000L |
| | Military ProASIC3/EL | Military temperature A3PE600L, A3P1000, and A3PE3000L |
| | Automotive ProASIC3 | ProASIC3 FPGAs qualified for automotive applications |
| Fusion | Fusion | Mixed signal FPGA integrating ProASIC3 FPGA fabric, programmable analog block, support for ARM® Cortex™-M1 soft processors, and flash memory into a monolithic device |

*Note: *The device names link to the appropriate datasheet, including product brief, DC and switching characteristics, and packaging information.*

## *IGLOO Terminology*

In documentation, the terms IGLOO series and IGLOO devices refer to all of the IGLOO products as listed in Table 3-1. Where the information applies to only one product line or limited devices, these exclusions will be explicitly stated.

## *ProASIC3 Terminology*

In documentation, the terms ProASIC3 series and ProASIC3 devices refer to all of the ProASIC3 devices as listed in Table 3-1. Where the information applies to only one product line or limited devices, these exclusions will be explicitly stated.

To further understand the differences between the IGLOO and ProASIC3 devices, refer to the *Industry's Lowest Power FPGAs Portfolio*.

# VersaNet Global Network Distribution

One of the architectural benefits of low power flash architecture is the set of powerful, low-delay VersaNet global networks that can access the VersaTiles, SRAM, and I/O tiles of the device. Each device offers a chip global network with six global lines (except for nano 10 k, 15 k, and 20 k gate devices) that are distributed from the center of the FPGA array. In addition, each device (except the 10 k through 30 k gate device) has four quadrant global networks, each consisting of three quadrant global net resources. These quadrant global networks can only drive a signal inside their own quadrant. Each VersaTile has access to nine global line resources—three quadrant and six chip-wide (main) global networks—and a total of 18 globals are available on the device (3 × 4 regional from each quadrant and 6 global).

Figure 3-1 shows an overview of the VersaNet global network and device architecture for devices 60 k and above. Figure 3-2 and Figure 3-3 on page 34 show simplified VersaNet global networks.

The VersaNet global networks are segmented and consist of spines, global ribs, and global multiplexers (MUXes), as shown in Figure 3-1. The global networks are driven from the global rib at the center of the die or quadrant global networks at the north or south side of the die. The global network uses the MUX trees to access the spine, and the spine uses the clock ribs to access the VersaTile. Access is available to the chip or quadrant global networks and the spines through the global MUXes. Access to the spine using the global MUXes is explained in the "Spine Architecture" section on page 41.

These VersaNet global networks offer fast, low-skew routing resources for high-fanout nets, including clock signals. In addition, these highly segmented global networks offer users the flexibility to create low-skew local clock networks using spines for up to 252 internal/external clocks or other high-fanout nets in low power flash devices. Optimal usage of these low-skew networks can result in significant improvement in design performance.

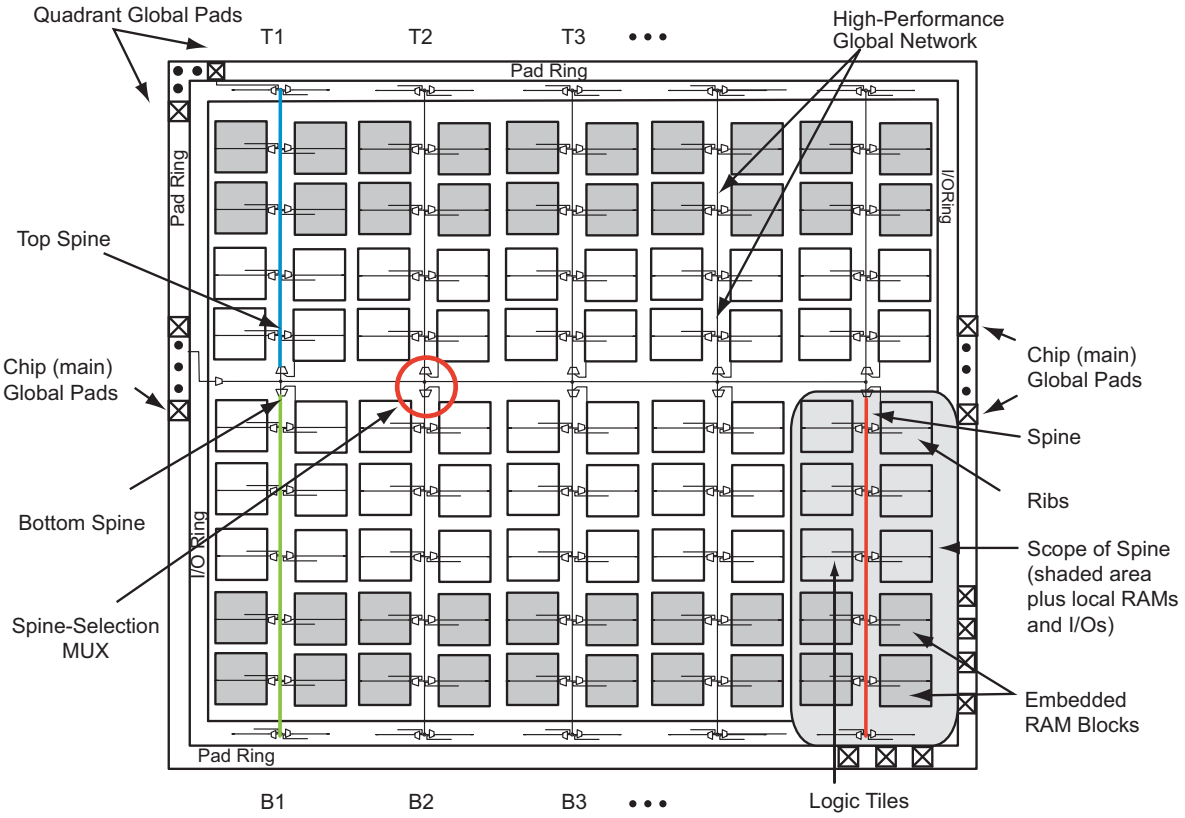


*Note: Not applicable to 10 k through 30 k gate devices*

***Figure 3-1* • Overview of VersaNet Global Network and Device Architecture**

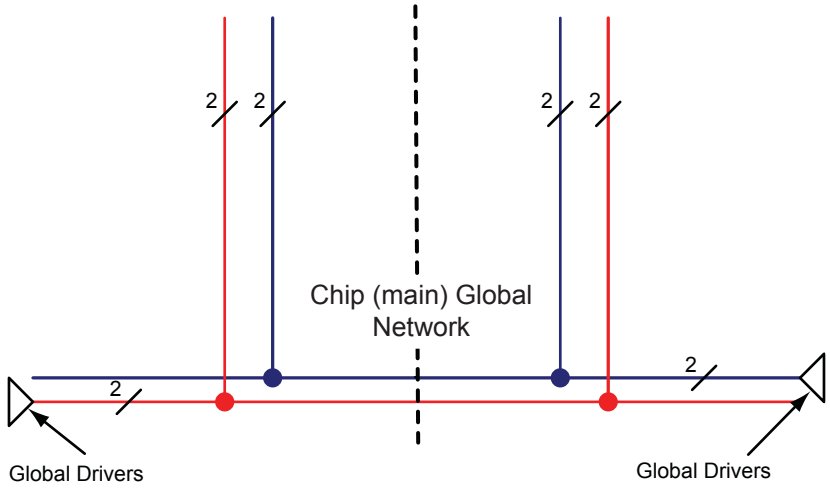


***Figure 3-2*** **• Simplified VersaNet Global Network (30 k gates and below)**

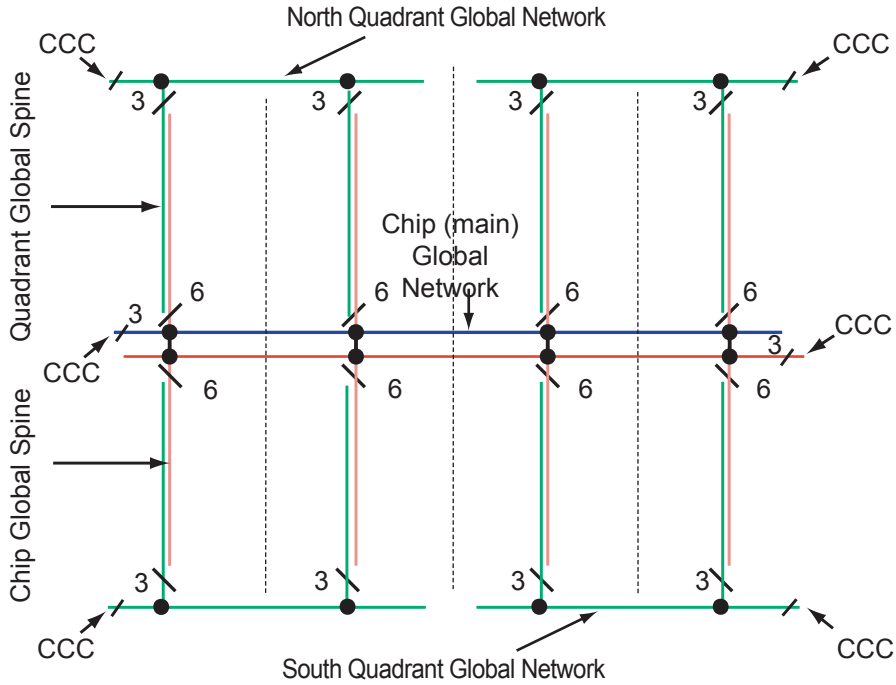


***Figure 3-3*** **• Simplified VersaNet Global Network (60 k gates and above)**

# Chip and Quadrant Global I/Os

The following sections give an overview of naming conventions and other related I/O information.

## Naming of Global I/Os

In low power flash devices, the global I/Os have access to certain clock conditioning circuitry and have direct access to the global network. Additionally, the global I/Os can be used as regular I/Os, since they have identical capabilities to those of regular I/Os. Due to the comprehensive and flexible nature of the I/Os in low power flash devices, a naming scheme is used to show the details of the I/O. The global I/O uses the generic name Gmn/IOuxwByVz. Note that Gmn refers to a global input pin and IOuxwByVz refers to a regular I/O Pin, as these I/Os can be used as either global or regular I/Os. Refer to the I/O Structures chapter of the user's guide for the device that you are using for more information on this naming convention.

Figure 3-4 represents the global input pins connection. It shows all 54 global pins available to access the 18 global networks in ProASIC3E families.

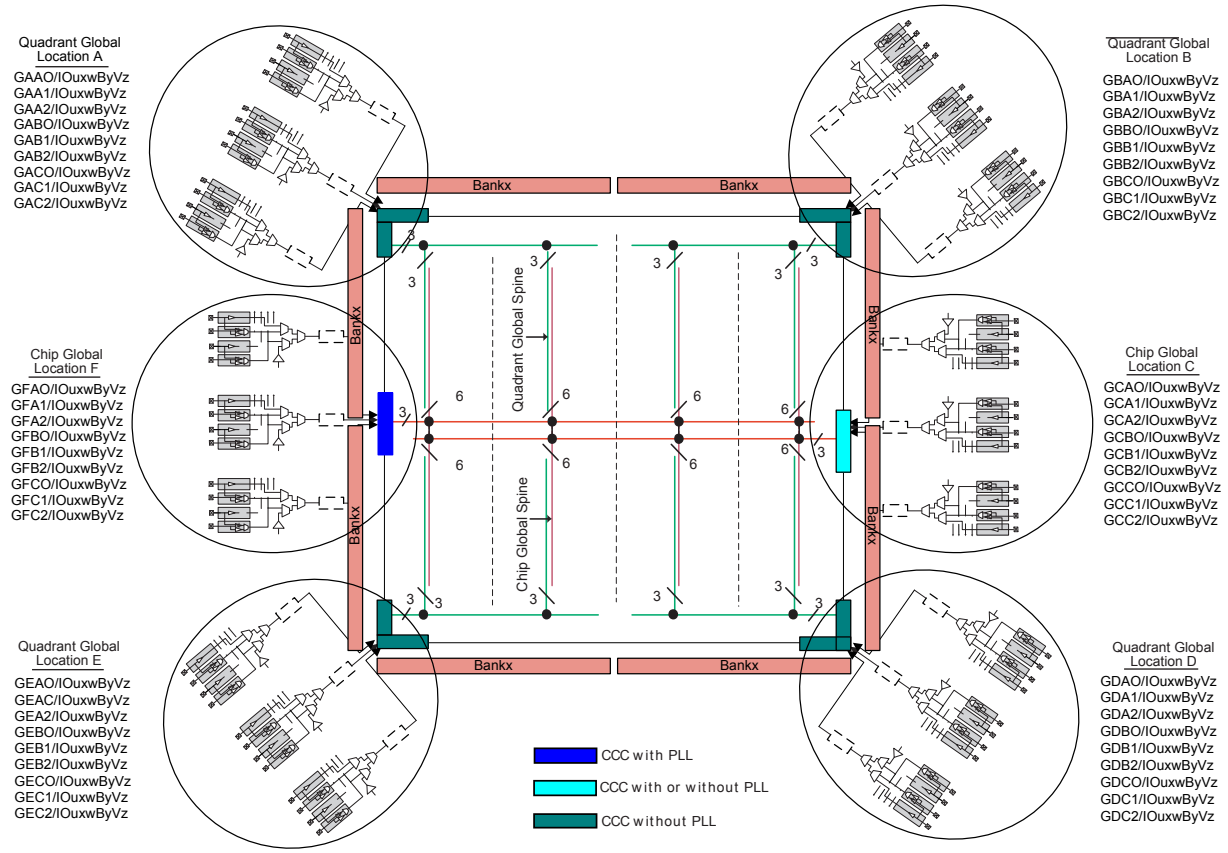


***Figure 3-4* • Global Connections Details**

Figure 3-5 shows more detailed global input connections. It shows the global input pins connection to the northwest quadrant global networks. Each global buffer, as well as the PLL reference clock, can be driven from one of the following:

- 3 dedicated single-ended I/Os using a hardwired connection
- 2 dedicated differential I/Os using a hardwired connection (not supported for IGLOO nano or ProASIC3 nano devices)
- The FPGA core

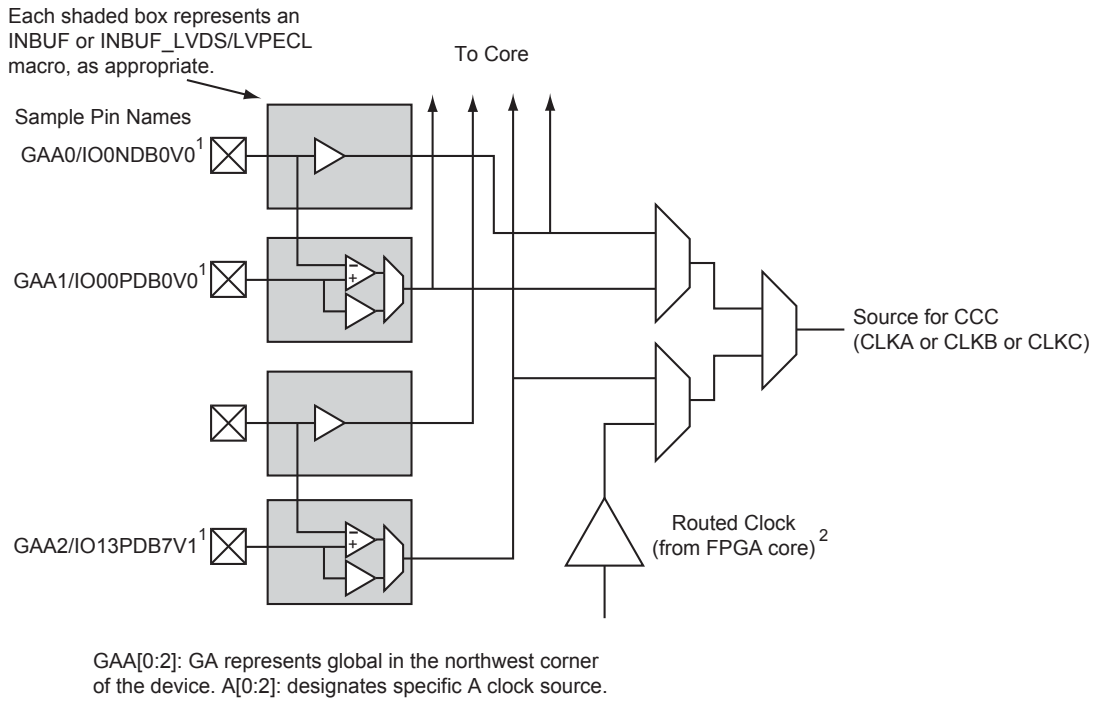


*Note: Differential inputs are not supported for IGLOO nano or ProASIC3 nano devices.*

***Figure 3-5* • Global I/O Overview**

Figure 3-6 shows all nine global inputs for the location A connected to the top left quadrant global network via CCC.

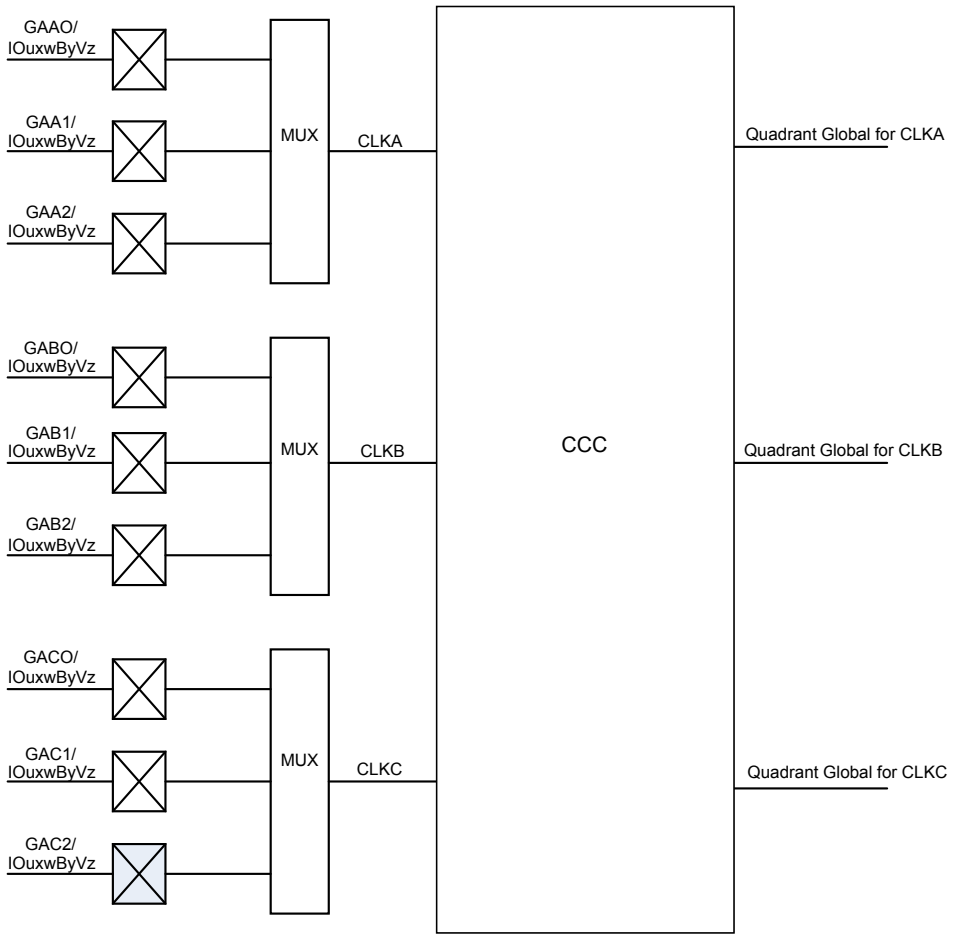


***Figure 3-6* • Global Inputs**

Since each bank can have a different I/O standard, the user should be careful to choose the correct global I/O for the design. There are 54 global pins available to access 18 global networks. For the single-ended and voltage-referenced I/O standards, you can use any of these three available I/Os to access the global network. For differential I/O standards such as LVDS and LVPECL, the I/O macro needs to be placed on (A0, A1), (B0, B1), (C0, C1), or a similar location. The unassigned global I/Os can be used as regular I/Os. Note that pin names starting with GF and GC are associated with the chip global networks, and GA, GB, GD, and GE are used for quadrant global networks. Table 3-2 on page 38 and Table 3-3 on page 39 show the general chip and quadrant global pin names.

***Table 3-2* • Chip Global Pin Name**

| I/O Type | Beginning of I/O Name | Notes |
|---|---|---|
| Single-Ended | GFAO/IOuxwByVz<br>GFA1/IOuxwByVz<br>GFA2/IOuxwByVz | Only one of the I/Os can be directly connected to a chip global at a time. |
| | GFBO/IOuxwByVz<br>GFB1/IOuxwByVz<br>GFB2/IOuxwByVz | Only one of the I/Os can be directly connected to a chip global at a time. |
| | GFC0/IOuxwByVz<br>GFC1/IOuxwByVz<br>GFC2/IOuxwByVz | Only one of the I/Os can be directly connected to a chip global at a time. |
| | GCAO/IOuxwByVz<br>GCA1/IOuxwByVz<br>GCA2/IOuxwByVz | Only one of the I/Os can be directly connected to a chip global at a time. |
| | GCBO/IOuxwByVz<br>GCB1/IOuxwByVz<br>GCB2/IOuxwByVz | Only one of the I/Os can be directly connected to a chip global at a time. |
| | GCC0/IOuxwByVz<br>GCC1/IOuxwByVz<br>GCC2/IOuxwByVz | Only one of the I/Os can be directly connected to a chip global at a time. |
| Differential I/O Pairs | GFAO/IOuxwByVz<br>GFA1/IOuxwByVz | The output of the different pair will drive the chip global. |
| | GFBO/IOuxwByVz<br>GFB1/IOuxwByVz | The output of the different pair will drive the chip global. |
| | GFCO/IOuxwByVz<br>GFC1/IOuxwByVz | The output of the different pair will drive the chip global. |
| | GCAO/IOuxwByVz<br>GCA1/IOuxwByVz | The output of the different pair will drive the chip global. |
| | GCBO/IOuxwByVz<br>GCB1/IOuxwByVz | The output of the different pair will drive the chip global. |
| | GCCO/IOuxwByVz<br>GCC1/IOuxwByVz | The output of the different pair will drive the chip global. |

*Note: Only one of the I/Os can be directly connected to a quadrant at a time.*

***Table 3-3* • Quadrant Global Pin Name**

| I/O Type | Beginning of I/O Name | Notes |
|---|---|---|
| Single-Ended | GAAO/IOuxwByVz<br>GAA1/IOuxwByVz<br>GAA2/IOuxwByVz | Only one of the I/Os can be directly connected to a quadrant global at a time |
| | GABO/IOuxwByVz<br>GAB1/IOuxwByVz<br>GAB2/IOuxwByVz | Only one of the I/Os can be directly connected to a quadrant global at a time. |
| | GAC0/IOuxwByVz<br>GAC1/IOuxwByVz<br>GAC2/IOuxwByVz | Only one of the I/Os can be directly connected to a quadrant global at a time. |
| | GBAO/IOuxwByVz<br>GBA1/IOuxwByVz<br>GBA2/IOuxwByVz | Only one of the I/Os can be directly connected to a global at a time. |
| | GBBO/IOuxwByVz<br>GBB1/IOuxwByVz<br>GBB2/IOuxwByVz | Only one of the I/Os can be directly connected to a global at a time. |
| | GBC0/IOuxwByVz<br>GBC1/IOuxwByVz<br>GBC2/IOuxwByVz | Only one of the I/Os can be directly connected to a global at a time. |
| | GDAO/IOuxwByVz<br>GDA1/IOuxwByVz<br>GDA2/IOuxwByVz | Only one of the I/Os can be directly connected to a global at a time. |
| | GDBO/IOuxwByVz<br>GDB1/IOuxwByVz<br>GDB2/IOuxwByVz | Only one of the I/Os can be directly connected to a global at a time. |
| | GDC0/IOuxwByVz<br>GDC1/IOuxwByVz<br>GDC2/IOuxwByVz | Only one of the I/Os can be directly connected to a global at a time. |
| | GEAO/IOuxwByVz<br>GEA1/IOuxwByVz<br>GEA2/IOuxwByVz | Only one of the I/Os can be directly connected to a global at a time. |
| | GEBO/IOuxwByVz<br>GEB1/IOuxwByVz<br>GEB2/IOuxwByVz | Only one of the I/Os can be directly connected to a global at a time. |
| | GEC0/IOuxwByVz<br>GEC1/IOuxwByVz<br>GEC2/IOuxwByVz | Only one of the I/Os can be directly connected to a global at a time. |

*Note: Only one of the I/Os can be directly connected to a quadrant at a time.*

***Table 3-3* • Quadrant Global Pin Name (continued)**

| | | |
|---|---|---|
| Differential I/O Pairs | GAAO/IOuxwByVz<br>GAA1/IOuxwByVz | The output of the different pair will drive the global. |
| | GABO/IOuxwByVz<br>GAB1/IOuxwByVz | The output of the different pair will drive the global. |
| | GACO/IOuxwByVz<br>GAC1/IOuxwByVz | The output of the different pair will drive the global. |
| | GBAO/IOuxwByVz<br>GBA1/IOuxwByVz | The output of the different pair will drive the global. |
| | GBBO/IOuxwByVz<br>GBB1/IOuxwByVz | The output of the different pair will drive the global. |
| | GBCO/IOuxwByVz<br>GBC1/IOuxwByVz | The output of the different pair will drive the global. |
| | GDAO/IOuxwByVz<br>GDA1/IOuxwByVz | The output of the different pair will drive the global. |
| | GDBO/IOuxwByVz<br>GDB1/IOuxwByVz | The output of the different pair will drive the global. |
| | GDCO/IOuxwByVz<br>GDC1/IOuxwByVz | The output of the different pair will drive the global. |
| | GEAO/IOuxwByVz<br>GEA1/IOuxwByVz | The output of the different pair will drive the global. |
| | GEBO/IOuxwByVz<br>GEB1/IOuxwByVz | The output of the different pair will drive the global. |
| | GECO/IOuxwByVz<br>GEC1/IOuxwByVz | The output of the different pair will drive the global. |

*Note: Only one of the I/Os can be directly connected to a quadrant at a time.*

## Unused Global I/O Configuration

The unused clock inputs behave similarly to the unused Pro I/Os. The Microsemi Designer software automatically configures the unused global pins as inputs with pull-up resistors if they are not used as regular I/O.

## I/O Banks and Global I/O Standards

In low power flash devices, any I/O or internal logic can be used to drive the global network. However, only the global macro placed at the global pins will use the hardwired connection between the I/O and global network. Global signal (signal driving a global macro) assignment to I/O banks is no different from regular I/O assignment to I/O banks with the exception that you are limited to the pin placement location available. Only global signals compatible with both the VCCI and VREF standards can be assigned to the same bank.

# Spine Architecture

The low power flash device architecture allows the VersaNet global networks to be segmented. Each of these networks contains spines (the vertical branches of the global network tree) and ribs that can reach all the VersaTiles inside its region. The nine spines available in a vertical column reside in global networks with two separate regions of scope: the quadrant global network, which has three spines, and the chip (main) global network, which has six spines. Note that the number of quadrant globals and globals/spines per tree varies depending on the specific device. Refer to Table 3-4 for the clocking resources available for each device. The spines are the vertical branches of the global network tree, shown in Figure 3-3 on page 34. Each spine in a vertical column of a chip (main) global network is further divided into two spine segments of equal lengths: one in the top and one in the bottom half of the die (except in 10 k through 30 k gate devices).

Top and bottom spine segments radiating from the center of a device have the same height. However, just as in the ProASIC$^{PLUS®}$ family, signals assigned only to the top and bottom spine cannot access the middle two rows of the die. The spines for quadrant clock networks do not cross the middle of the die and cannot access the middle two rows of the architecture.

Each spine and its associated ribs cover a certain area of the device (the "scope" of the spine; see Figure 3-3 on page 34). Each spine is accessed by the dedicated global network MUX tree architecture, which defines how a particular spine is driven—either by the signal on the global network from a CCC, for example, or by another net defined by the user. Details of the chip (main) global network spine-selection MUX are presented in Figure 3-8 on page 44. The spine drivers for each spine are located in the middle of the die.

Quadrant spines can be driven from user I/Os or an internal signal from the north and south sides of the die. The ability to drive spines in the quadrant global networks can have a significant effect on system performance for high-fanout inputs to a design. Access to the top quadrant spine regions is from the top of the die, and access to the bottom quadrant spine regions is from the bottom of the die. The A3PE3000 device has 28 clock trees and each tree has nine spines; this flexible global network architecture enables users to map up to 252 different internal/external clocks in an A3PE3000 device.

***Table 3-4* • Globals/Spines/Rows for IGLOO and ProASIC3 Devices**

| ProASIC3/ ProASIC3L Devices | IGLOO Devices | Chip Globals | Quadrant Globals (4×3) | Clock Trees | Globals/ Spines per Tree | Total Spines per Device | VersaTiles in Each Tree | Total VersaTiles | Rows in Each Spine |
|---|---|---|---|---|---|---|---|---|---|
| A3PN010 | AGLN010 | 4 | 0 | 1 | 0 | 0 | 260 | 260 | 4 |
| A3PN015 | AGLN015 | 4 | 0 | 1 | 0 | 0 | 384 | 384 | 6 |
| A3PN020 | AGLN020 | 4 | 0 | 1 | 0 | 0 | 520 | 520 | 6 |
| A3PN060 | AGLN060 | 6 | 12 | 4 | 9 | 36 | 384 | 1,536 | 12 |
| A3PN125 | AGLN125 | 6 | 12 | 8 | 9 | 72 | 384 | 3,072 | 12 |
| A3PN250 | AGLN250 | 6 | 12 | 8 | 9 | 72 | 768 | 6,144 | 24 |
| A3P015 | AGL015 | 6 | 0 | 1 | 9 | 9 | 384 | 384 | 12 |
| A3P030 | AGL030 | 6 | 0 | 2 | 9 | 18 | 384 | 768 | 12 |
| A3P060 | AGL060 | 6 | 12 | 4 | 9 | 36 | 384 | 1,536 | 12 |
| A3P125 | AGL125 | 6 | 12 | 8 | 9 | 72 | 384 | 3,072 | 12 |
| A3P250/L | AGL250 | 6 | 12 | 8 | 9 | 72 | 768 | 6,144 | 24 |
| A3P400 | AGL400 | 6 | 12 | 12 | 9 | 108 | 768 | 9,216 | 24 |
| A3P600/L | AGL600 | 6 | 12 | 12 | 9 | 108 | 1,152 | 13,824 | 36 |
| A3P1000/L | AGL1000 | 6 | 12 | 16 | 9 | 144 | 1,536 | 24,576 | 48 |
| A3PE600/L | AGLE600 | 6 | 12 | 12 | 9 | 108 | 1,120 | 13,440 | 35 |
| A3PE1500 | | 6 | 12 | 20 | 9 | 180 | 1,888 | 37,760 | 59 |
| A3PE3000/L | AGLE3000 | 6 | 12 | 28 | 9 | 252 | 2,656 | 74,368 | 83 |

***Table 3-5* • Globals/Spines/Rows for IGLOO PLUS Devices**

| IGLOO PLUS Devices | Chip Globals | Quadrant Globals (4×3) | Clock Trees | Globals/ Spines per Tree | Total Spines per Device | VersaTiles in Each Tree | Total VersaTiles | Rows in Each Spine |
|---|---|---|---|---|---|---|---|---|
| AGLP030 | 6 | 0 | 2 | 9 | 18 | 384* | 792 | 12 |
| AGLP060 | 6 | 12 | 4 | 9 | 36 | 384* | 1,584 | 12 |
| AGLP125 | 6 | 12 | 8 | 9 | 72 | 384* | 3,120 | 12 |

*Note: *Clock trees that are located at far left and far right will support more VersaTiles.*

***Table 3-6* • Globals/Spines/Rows for Fusion Devices**

| Fusion Device | Chip Globals | Quadrant Globals (4×3) | Clock Trees | Globals/ Spines per Tree | Total Spines per Device | VersaTiles in Each Tree | Total VersaTiles | Rows in Each Spine |
|---|---|---|---|---|---|---|---|---|
| AFS090 | 6 | 12 | 6 | 9 | 54 | 384 | 2,304 | 12 |
| AFS250 | 6 | 12 | 8 | 9 | 72 | 768 | 6,144 | 24 |
| AFS600 | 6 | 12 | 12 | 9 | 108 | 1,152 | 13,824 | 36 |
| AFS1500 | 6 | 12 | 20 | 9 | 180 | 1,920 | 38,400 | 60 |

## Spine Access

The physical location of each spine is identified by the letter T (top) or B (bottom) and an accompanying number (T*n* or B*n*). The number *n* indicates the horizontal location of the spine; 1 refers to the first spine on the left side of the die. Since there are six chip spines in each spine tree, there are up to six spines available for each combination of T (or B) and *n* (for example, six T1 spines). Similarly, there are three quadrant spines available for each combination of T (or B) and *n* (for example, four T1 spines), as shown in Figure 3-7.

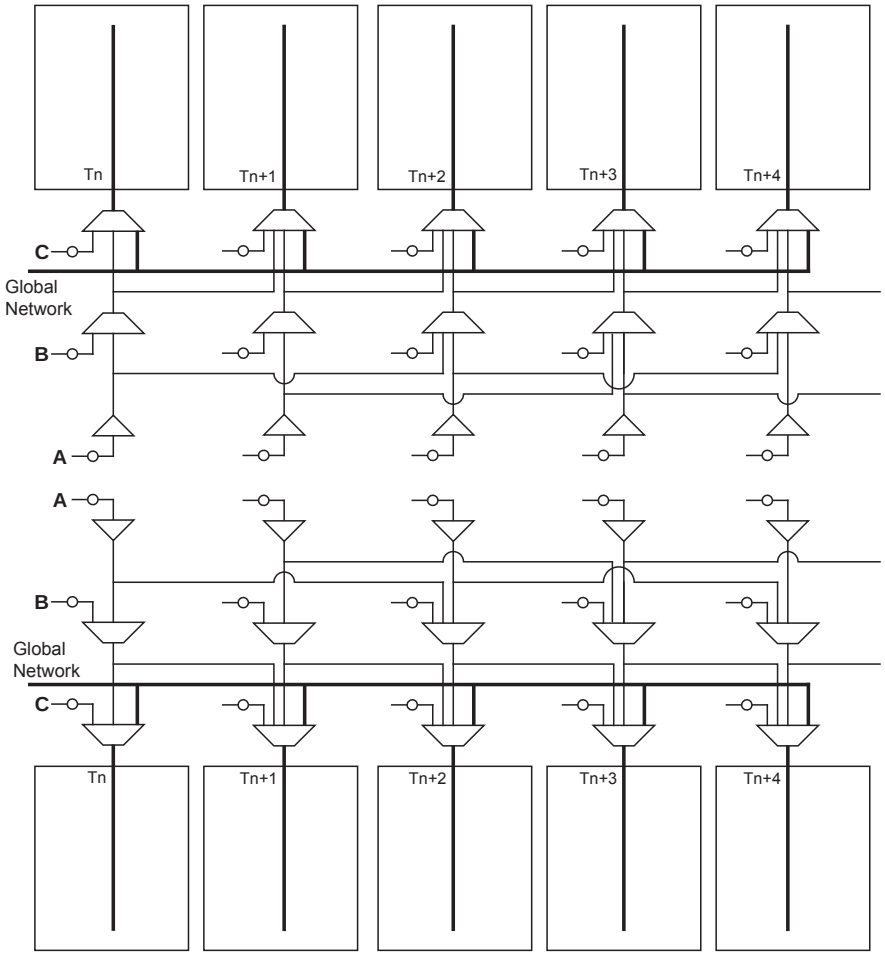


***Figure 3-7*** **• Chip Global Aggregation**

A spine is also called a local clock network, and is accessed by the dedicated global MUX architecture. These MUXes define how a particular spine is driven. Refer to Figure 3-8 on page 44 for the global MUX architecture. The MUXes for each chip global spine are located in the middle of the die. Access to the top and bottom chip global spine is available from the middle of the die. There is no control dependency between the top and bottom spines. If a top spine, T1, of a chip global network is assigned to a net, B1 is not wasted and can be used by the global clock network. The signal assigned only to the top or bottom spine cannot access the middle two rows of the architecture. However, if a spine is using the top and bottom at the same time (T1 and B1, for instance), the previous restriction is lifted.

The MUXes for each quadrant global spine are located in the north and south sides of the die. Access to the top and bottom quadrant global spines is available from the north and south sides of the die. Since the MUXes for quadrant spines are located in the north and south sides of the die, you should not try to drive T1 and B1 quadrant spines from the same signal.

# Using Clock Aggregation

Clock aggregation allows for multi-spine clock domains to be assigned using hardwired connections, without adding any extra skew. A MUX tree, shown in Figure 3-8, provides the necessary flexibility to allow long lines, local resources, or I/Os to access domains of one, two, or four global spines. Signal access to the clock aggregation system is achieved through long-line resources in the central rib in the center of the die, and also through local resources in the north and south ribs, allowing I/Os to feed directly into the clock system. As Figure 3-9 indicates, this access system is contiguous.

There is no break in the middle of the chip for the north and south I/O VersaNet access. This is different from the quadrant clocks located in these ribs, which only reach the middle of the rib.

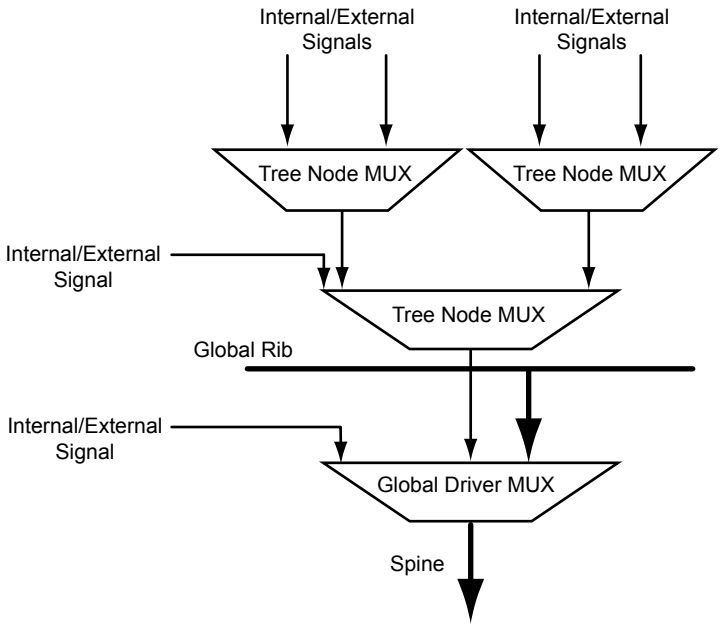


***Figure 3-8*** **• Spine Selection MUX of Global Tree**

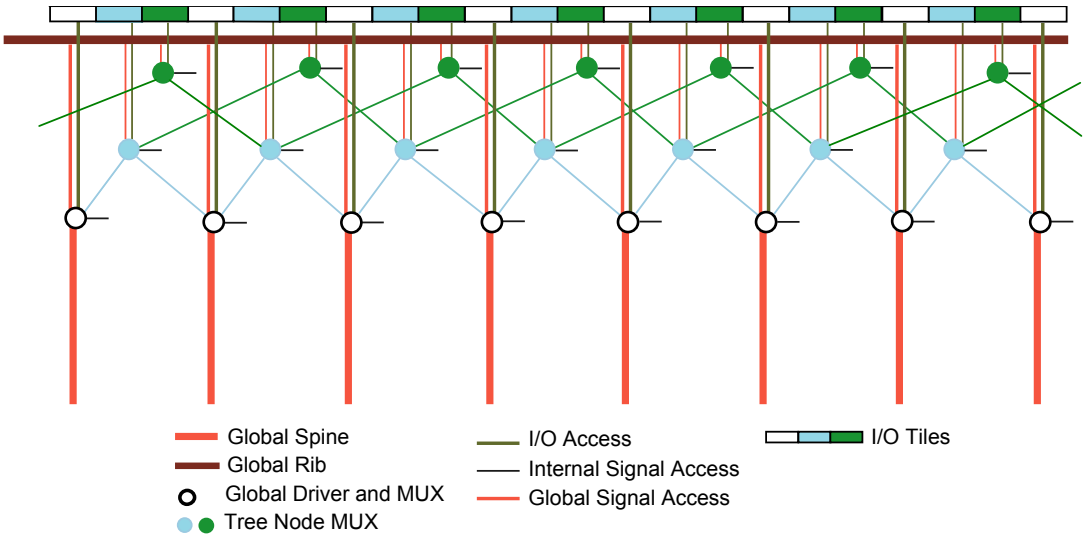


***Figure 3-9*** **• Clock Aggregation Tree Architecture**

## Clock Aggregation Architecture

This clock aggregation feature allows a balanced clock tree, which improves clock skew. The physical regions for clock aggregation are defined from left to right and shift by one spine. For chip global networks, there are three types of clock aggregation available, as shown in Figure 3-10:

- Long lines that can drive up to four adjacent spines (A)
- Long lines that can drive up to two adjacent spines (B)
- Long lines that can drive one spine (C)

There are three types of clock aggregation available for the quadrant spines, as shown in Figure 3-10:

- I/Os or local resources that can drive up to four adjacent spines
- I/Os or local resources that can drive up to two adjacent spines
- I/Os or local resources that can drive one spine

As an example, A3PE600 and AFS600 devices have twelve spine locations: T1, T2, T3, T4, T5, T6, B1, B2, B3, B4, B5, and B6. Table 3-7 shows the clock aggregation you can have in A3PE600 and AFS600.

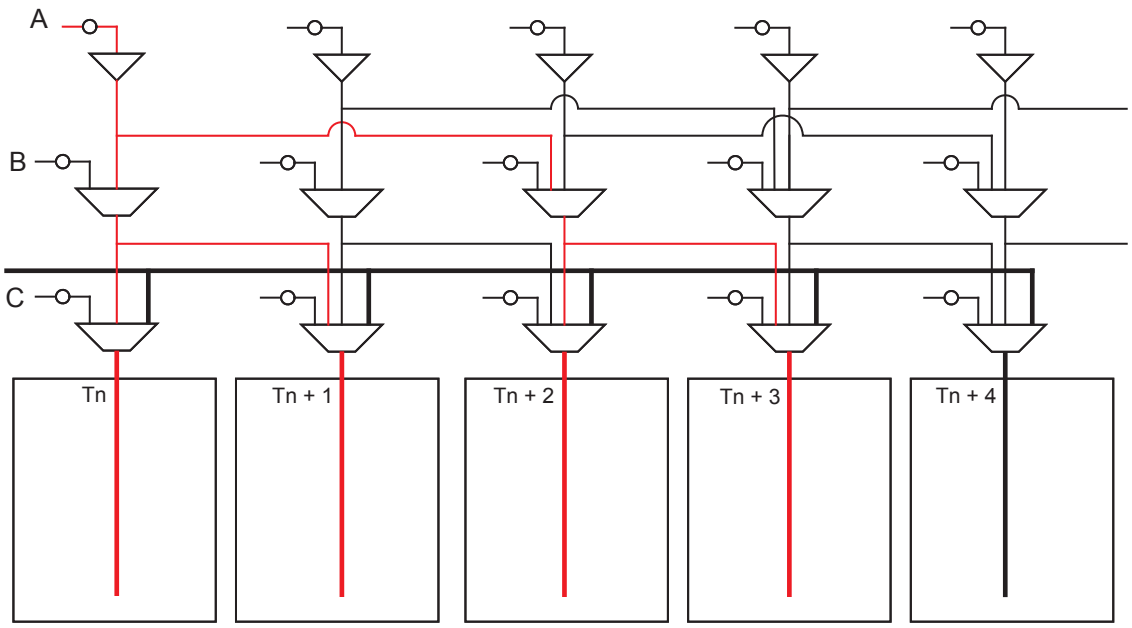


***Figure 3-10*** **• Four Spines Aggregation**

***Table 3-7*** **• Spine Aggregation in A3PE600 or AFS600**

| Clock Aggregation | Spine |
|---|---|
| 1 spine | T1, T2, T3, T4, T5, T6, B1, B2, B3, B4, B5, B6 |
| 2 spines | T1:T2, T2:T3, T3:T4, T4:T5, T5:T6, B1:B2, B2:B3, B3:B4, B4:B5, B5:B6 |
| 4 spines | B1:B4, B2:B5, B3:B6, T1:T4, T2:T5, T3:T6 |

The clock aggregation for the quadrant spines can cross over from the left to right quadrant, but not from top to bottom. The quadrant spine assignment T1:T4 is legal, but the quadrant spine assignment T1:B1 is not legal. Note that this clock aggregation is hardwired. You can always assign signals to spine T1 and B2 by instantiating a buffer, but this may add skew in the signal.

# Design Recommendations

The following sections provide design flow recommendations for using a global network in a design.


- "Global Macros and I/O Standards"
- "Global Macro and Placement Selections" on page 48
- "Using Global Macros in Synplicity" on page 50
- "Global Promotion and Demotion Using PDC" on page 51
- "Spine Assignment" on page 52
- "Designer Flow for Global Assignment" on page 53
- "Simple Design Example" on page 55
- "Global Management in PLL Design" on page 57
- "Using Spines of Occupied Global Networks" on page 58


## Global Macros and I/O Standards

The larger low power flash devices have six chip global networks and four quadrant global networks. However, the same clock macros are used for assigning signals to chip globals and quadrant globals. Depending on the clock macro placement or assignment in the Physical Design Constraint (PDC) file or MultiView Navigator (MVN), the signal will use the chip global network or quadrant network. Table 3-8 lists the clock macros available for low power flash devices. Refer to the *IGLOO, ProASIC3, SmartFusion, and Fusion Macro Library Guide* for details.

***Table 3-8* • Clock Macros**

| Macro Name | Description | Symbol |
|---|---|---|
| CLKBUF | Input macro for Clock Network | 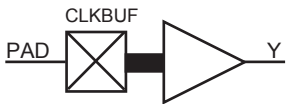 |
| CLKBUF_x | Input macro for Clock Network with specific I/O standard | 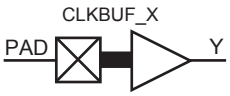 |
| CLKBUF_LVDS/LVPECL | LVDS or LVPECL input macro for Clock Network (not supported for IGLOO nano or ProASIC3 nano devices) | 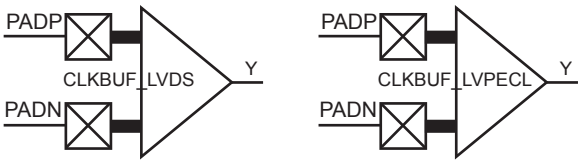 |
| CLKINT | Macro for internal clock interface | |
| CLKBIBUF | Bidirectional macro with input dedicated to routed Clock Network | |

Use these available macros to assign a signal to the global network. In addition to these global macros, PLL and CLKDLY macros can also drive the global networks. Use I/O–standard–specific clock macros (CLKBUF_x) to instantiate a specific I/O standard for the global signals. Table 3-9 on page 47 shows the list of these I/O–standard–specific macros. Note that if you use these I/O–standard–specific clock macros, you cannot change the I/O standard later in the design stage. If you use the regular CLKBUF macro, you can use MVN or the PDC file in Designer to change the I/O standard. The default I/O

standard for CLKBUF is LVTTL in the current Microsemi Libero® System-on-Chip (SoC) and Designer software.

***Table 3-9* • I/O Standards within CLKBUF**

| Name | Description |
|---|---|
| CLKBUF_LVCMOS5 | LVCMOS clock buffer with 5.0 V CMOS voltage level |
| CLKBUF_LVCMOS33 | LVCMOS clock buffer with 3.3 V CMOS voltage level |
| CLKBUF_LVCMOS25 | LVCMOS clock buffer with 2.5 V CMOS voltage level[1] |
| CLKBUF_LVCMOS18 | LVCMOS clock buffer with 1.8 V CMOS voltage level |
| CLKBUF_LVCMOS15 | LVCMOS clock buffer with 1.5 V CMOS voltage level |
| CLKBUF_LVCMOS12 | LVCMOS clock buffer with 1.2 V CMOS voltage level |
| CLKBUF_PCI | PCI clock buffer |
| CLKBUF_PCIX | PCIX clock buffer |
| CLKBUF_GTL25 | GTL clock buffer with 2.5 V CMOS voltage level[1] |
| CLKBUF_GTL33 | GTL clock buffer with 3.3 V CMOS voltage level[1] |
| CLKBUF_GTLP25 | GTL+ clock buffer with 2.5 V CMOS voltage level[1] |
| CLKBUF_GTLP33 | GTL+ clock buffer with 3.3 V CMOS voltage level[1] |
| CLKBUF_ HSTL _I | HSTL Class I clock buffer[1] |
| CLKBUF_ HSTL _II | HSTL Class II clock buffer[1] |
| CLKBUF_SSTL2_I | SSTL2 Class I clock buffer[1] |
| CLKBUF_SSTL2_II | SSTL2 Class II clock buffer[1] |
| CLKBUF_SSTL3_I | SSTL3 Class I clock buffer[1] |
| CLKBUF_SSTL3_II | SSTL3 Class II clock buffer[1] |

*Notes:*

1. *Supported in only the IGLOOe, ProASIC3E, AFS600, and AFS1500 devices*
2. *By default, the CLKBUF macro uses the 3.3 V LVTTL I/O technology.*

The current synthesis tool libraries only infer the CLKBUF or CLKINT macros in the netlist. All other global macros must be instantiated manually into your HDL code. The following is an example of CLKBUF_LVCMOS25 global macro instantiations that you can copy and paste into your code:

## VHDL

```
component clkbuf_lvcmos25
  port (pad : in std_logic; y : out std_logic);
end component

begin
-- concurrent statements
u2 : clkbuf_lvcmos25 port map (pad =>  ext_clk, y => int_clk);
end
```

## Verilog

```
module design (______);

input _____;
output ______;

clkbuf_lvcmos25 u2 (.y(int_clk), .pad(ext_clk);

endmodule
```

## Global Macro and Placement Selections

Low power flash devices provide the flexibility of choosing one of the three global input pad locations available to connect to a global / quadrant global network. For 60K gate devices and above, if the single-ended I/O standard is chosen, there is flexibility to choose one of the global input pads (the first, second, and fourth input). Once chosen, the other I/O locations are used as regular I/Os. If the differential I/O standard is chosen, the first and second inputs are considered as paired, and the third input is paired with a regular I/O. The user then has the choice of selecting one of the two sets to be used as the global input source. There is also the option to allow an internal clock signal to feed the global network. A multiplexer tree selects the appropriate global input for routing to the desired location. Note that the global I/O pads do not need to feed the global network; they can also be used as regular I/O pads.

### *Hardwired I/O Clock Source*

Hardwired I/O refers to global input pins that are hardwired to the multiplexer tree, which directly accesses the global network. These global input pins have designated pin locations and are indicated with the I/O naming convention Gmn (m refers to any one of the positions where the global buffers is available, and n refers to any one of the three global input MUXes and the pin number of the associated global location, m). Choosing this option provides the benefit of directly connecting to the global buffers, which provides less delay. See Figure 3-11 for an example illustration of the connections, shown in red. If a CLKBUF macro is initiated, the clock input can be placed at one of nine dedicated global input pin locations: GmA0, GmA1, GmA2, GmB0, GmB1, GmB2, GmC0, GmC1, or GmC2. Note that the placement of the global will determine whether you are using chip global or quadrant global. For example, if the CLKBIF is placed in one of the GF pin locations, it will use the chip global network; if the CLKBIF is placed in one of the GA pin locations, it will use quadrant global network. This is shown in Figure 3-12 on page 49 and Figure 3-13 on page 49.

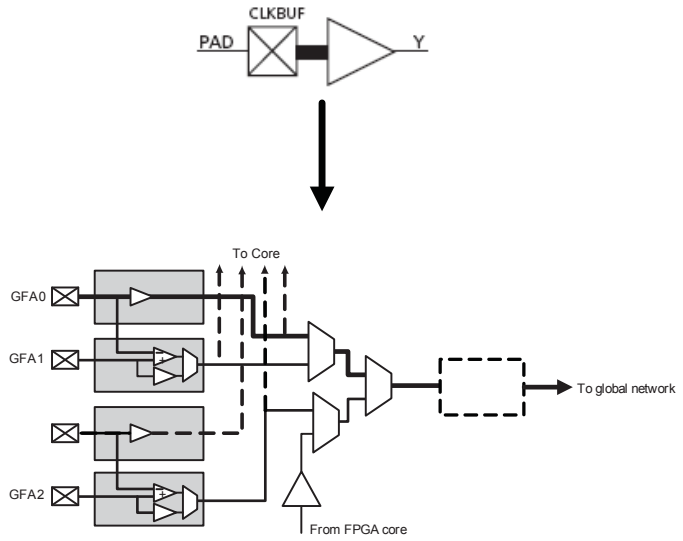


***Figure 3-11*** **• CLKBUF Macro**

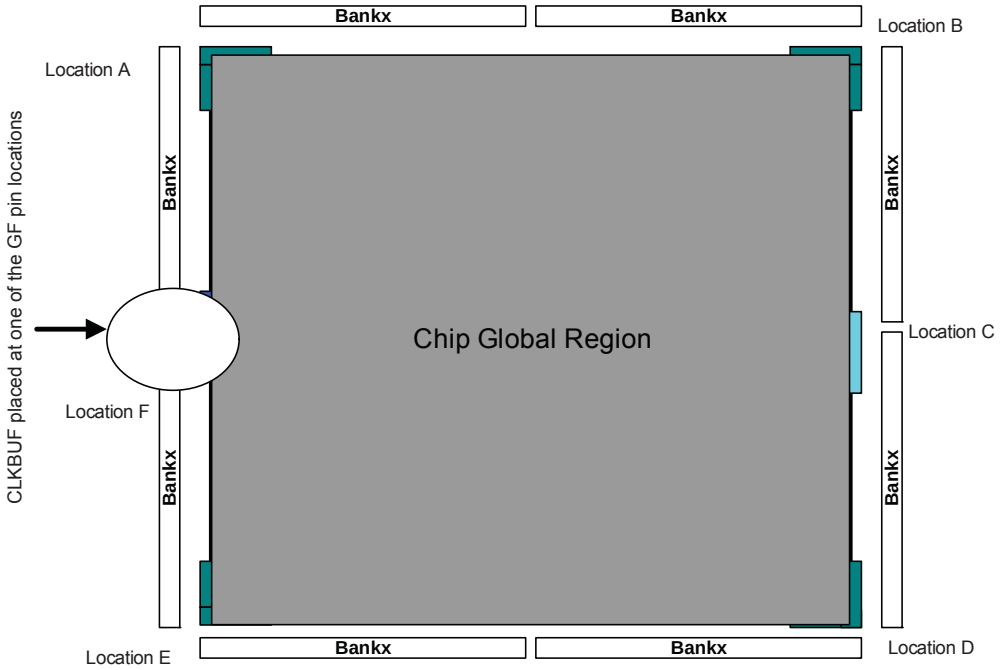


***Figure 3-12*** **• Chip Global Region**

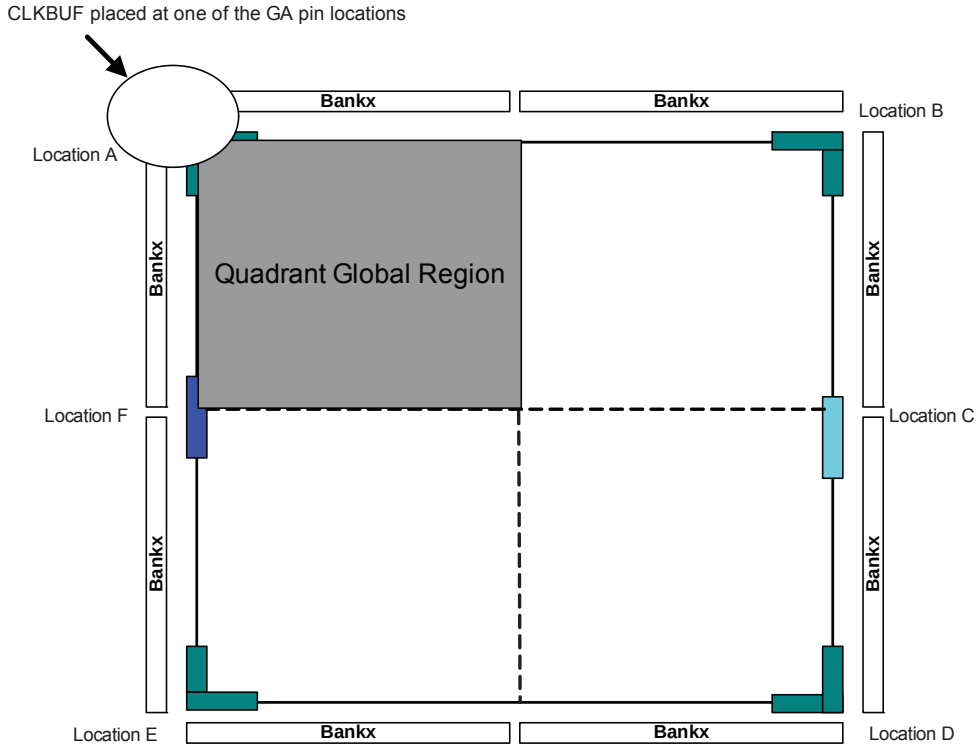


***Figure 3-13*** **• Quadrant Global Region**

### External I/O or Local signal as Clock Source

External I/O refers to regular I/O pins are labeled with the I/O convention IOuxwByVz. You can allow the external I/O or internal signal to access the global. To allow the external I/O or internal signal to access the global network, you need to instantiate the CLKINT macro. Refer to Figure 3-4 on page 35 for an example illustration of the connections. Instead of using CLKINT, you can also use PDC to promote signals from external I/O or internal signal to the global network. However, it may cause layout issues because of synthesis logic replication. Refer to the "Global Promotion and Demotion Using PDC" section on page 51 for details.

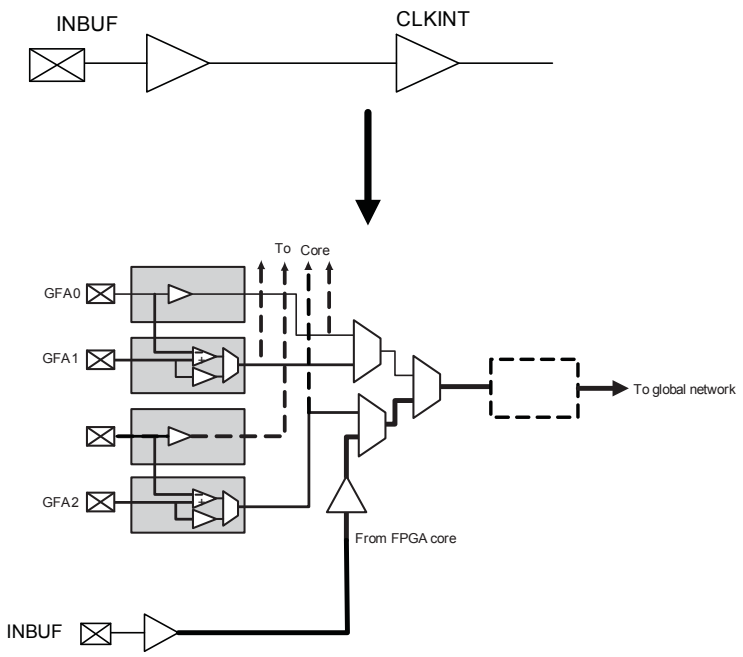


***Figure 3-14* • CLKINT Macro**

## Using Global Macros in Synplicity

The Synplify® synthesis tool automatically inserts global buffers for nets with high fanout during synthesis. By default, Synplicity® puts six global macros (CLKBUF or CLKINT) in the netlist, including any global instantiation or PLL macro. Synplify always honors your global macro instantiation. If you have a PLL (only primary output is used) in the design, Synplify adds five more global buffers in the netlist. Synplify uses the following global counting rule to add global macros in the netlist:

1. CLKBUF: 1 global buffer
2. CLKINT: 1 global buffer
3. CLKDLY: 1 global buffer
4. PLL: 1 to 3 global buffers
   - GLA, GLB, GLC, YB, and YC are counted as 1 buffer.
   - GLB or YB is used or both are counted as 1 buffer.
   - GLC or YC is used or both are counted as 1 buffer.

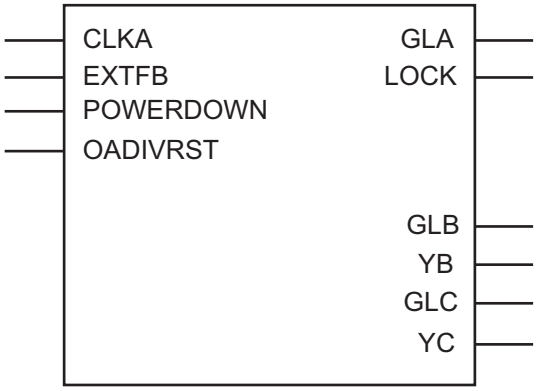


*Note: OAVDIVRST exists only in the Fusion PLL.*

***Figure 3-15* • PLLs in Low Power Flash Devices**

You can use the syn_global_buffers attribute in Synplify to specify a maximum number of global macros to be inserted in the netlist. This can also be used to restrict the number of global buffers inserted. In the Synplicity 8.1 version or newer, a new attribute, syn_global_minfanout, has been added for low power flash devices. This enables you to promote only the high-fanout signal to global. However, be aware that you can only have six signals assigned to chip global networks, and the rest of the global signals should be assigned to quadrant global networks. So, if the netlist has 18 global macros, the remaining 12 global macros should have fanout that allows the instances driven by these globals to be placed inside a quadrant.

## Global Promotion and Demotion Using PDC

The HDL source file or schematic is the preferred place for defining which signals should be assigned to a clock network using clock macro instantiation. This method is preferred because it is guaranteed to be honored by the synthesis tools and Designer software and stop any replication on this net by the synthesis tool. Note that a signal with fanout may have logic replication if it is not promoted to global during synthesis. In that case, the user cannot promote that signal to global using PDC. See Synplicity Help for details on using this attribute. To help you with global management, Designer allows you to promote a signal to a global network or demote a global macro to a regular macro from the user netlist using the compile options and/or PDC commands.

The following are the PDC constraints you can use to promote a signal to a global network:

1. PDC syntax to promote a regular net to a chip global clock:

   ```
   assign_global_clock –net netname
   ```

   The following will happen during promotion of a regular signal to a global network:

   – If the net is external, the net will be driven by a CLKINT inserted automatically by Compile.

   – The I/O macro will not be changed to CLKBUF macros.

   – If the net is an internal net, the net will be driven by a CLKINT inserted automatically by Compile.

2. PDC syntax to promote a net to a quadrant clock:

   ```
   assign_local_clock –net netname –type quadrant UR|UL|LR|LL
   ```

   This follows the same rule as the chip global clock network.

The following PDC command demotes the clock nets to regular nets.

```
unassign_global_clock -net netname
```

The following will happen during demotion of a global signal to regular nets:

- CLKBUF_x becomes INBUF_x; CLKINT is removed from the netlist.
- The essential global macro, such as the output of the Clock Conditioning Circuit, cannot be demoted.
- No automatic buffering will happen.

Since no automatic buffering happens when a signal is demoted, this net may have a high delay due to large fanout. This may have a negative effect on the quality of the results. Microsemi recommends that the automatic global demotion only be used on small-fanout nets. Use clock networks for high-fanout nets to improve timing and routability.

## Spine Assignment

The low power flash device architecture allows the global networks to be segmented and used as clock spines. These spines, also called local clock networks, enable the use of PDC or MVN to assign a signal to a spine.

PDC syntax to promote a net to a spine/local clock:

```
assign_local_clock –net netname –type [quadrant|chip] Tn|Bn|Tn:Bm
```

If the net is driven by a clock macro, Designer automatically demotes the clock net to a regular net before it is assigned to a spine. Nets driven by a PLL or CLKDLY macro cannot be assigned to a local clock.

When assigning a signal to a spine or quadrant global network using PDC (pre-compile), the Designer software will legalize the shared instances. The number of shared instances to be legalized can be controlled by compile options. If these networks are created in MVN (only quadrant globals can be created), no legalization is done (as it is post-compile). Designer does not do legalization between non-clock nets.

As an example, consider two nets, net_clk and net_reset, driving the same flip-flop. The following PDC constraints are used:

```
assign_local_clock –net net_clk –type chip T3
assign_local_clock –net net_reset –type chip T1:T2
```

During Compile, Designer adds a buffer in the reset net and places it in the T1 or T2 region, and places the flip-flop in the T3 spine region (Figure 3-16).

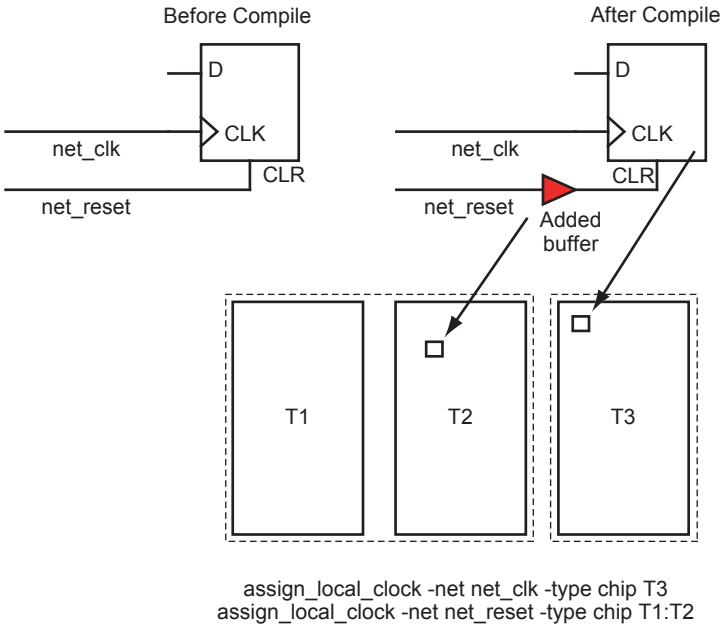


***Figure 3-16*** **• Adding a Buffer for Shared Instances**

You can control the maximum number of shared instances allowed for the legalization to take place using the Compile Option dialog box shown in Figure 3-17. Refer to Libero SoC / Designer online help for details on the Compile Option dialog box. A large number of shared instances most likely indicates a floorplanning problem that you should address.

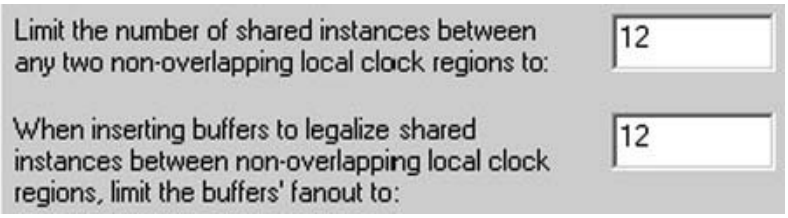


***Figure 3-17* • Shared Instances in the Compile Option Dialog Box**

## Designer Flow for Global Assignment

To achieve the desired result, pay special attention to global management during synthesis and place-and-route. The current Synplify tool does not insert more than six global buffers in the netlist by default. Thus, the default flow will not assign any signal to the quadrant global network. However, you can use attributes in Synplify and increase the default global macro assignment in the netlist. Designer v6.2 supports automatic quadrant global assignment, which was not available in Designer v6.1. Layout will make the choice to assign the correct signals to global. However, you can also utilize PDC and perform manual global assignment to overwrite any automatic assignment. The following step-by-step suggestions guide you in the layout of your design and help you improve timing in Designer:

1. Run Compile and check the Compile report. The Compile report has global information in the "Device Utilization" section that describes the number of chip and quadrant signals in the design. A "Net Report" section describes chip global nets, quadrant global nets, local clock nets, a list of nets listed by fanout, and net candidates for local clock assignment. Review this information. Note that YB or YC are counted as global only when they are used in isolation; if you use YB only and not GLB, this net is not shown in the global/quadrant nets report. Instead, it appears in the Global Utilization report.
2. If some signals have a very high fanout and are candidates for global promotion, promote those signals to global using the compile options or PDC commands. Figure 3-18 on page 54 shows the Globals Management section of the compile options. Select **Promote regular nets whose fanout is greater than** and enter a reasonable value for fanouts.

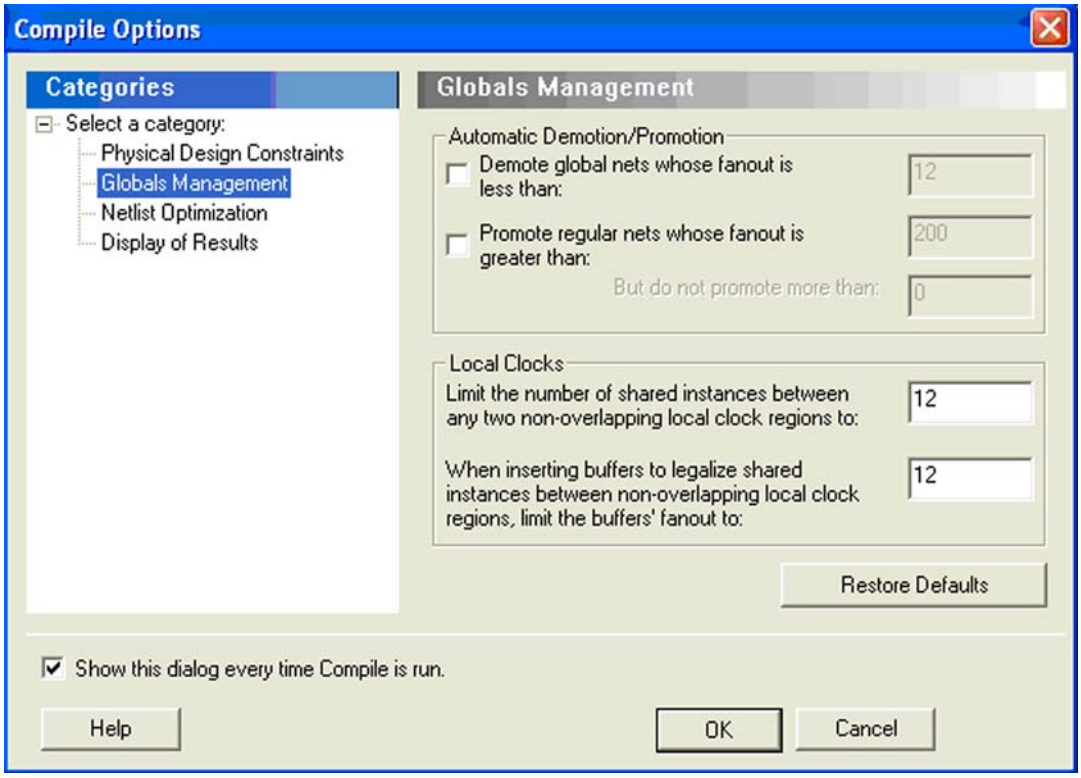


***Figure 3-18*** **• Globals Management GUI in Designer**

3. Occasionally, the synthesis tool assigns a global macro to clock nets, even though the fanout is significantly less than other asynchronous signals. Select **Demote global nets whose fanout is less than** and enter a reasonable value for fanouts. This frees up some global networks from the signals that have very low fanouts. This can also be done using PDC.
4. Use a local clock network for the signals that do not need to go to the whole chip but should have low skew. This local clock network assignment can only be done using PDC.
5. Assign the I/O buffer using MVN if you have fixed I/O assignment. As shown in Figure 3-10 on page 45, there are three sets of global pins that have a hardwired connection to each global network. Do not try to put multiple CLKBUF macros in these three sets of global pins. For example, do not assign two CLKBUFs to GAA0x and GAA2x pins.
6. You must click **Commit** at the end of MVN assignment. This runs the pre-layout checker and checks the validity of global assignment.
7. Always run Compile with the **Keep existing physical constraints** option on. This uses the quadrant clock network assignment in the MVN assignment and checks if you have the desired signals on the global networks.
8. Run Layout and check the timing.

## Simple Design Example

Consider a design consisting of six building blocks (shift registers) and targeted for an A3PE600-PQ208 (Figure 3-16 on page 52). The example design consists of two PLLs (PLL1 has GLA only; PLL2 has both GLA and GLB), a global reset (ACLR), an enable (EN_ALL), and three external clock domains (QCLK1, QCLK2, and QCLK3) driving the different blocks of the design. Note that the PQ208 package only has two PLLs (which access the chip global network). Because of fanout, the global reset and enable signals need to be assigned to the chip global resources. There is only one free chip global for the remaining global (QCLK1, QCLK2, QCLK3). Place two of these signals on the quadrant global resource. The design example demonstrates manually assignment of QCLK1 and QCLK2 to the quadrant global using the PDC command.

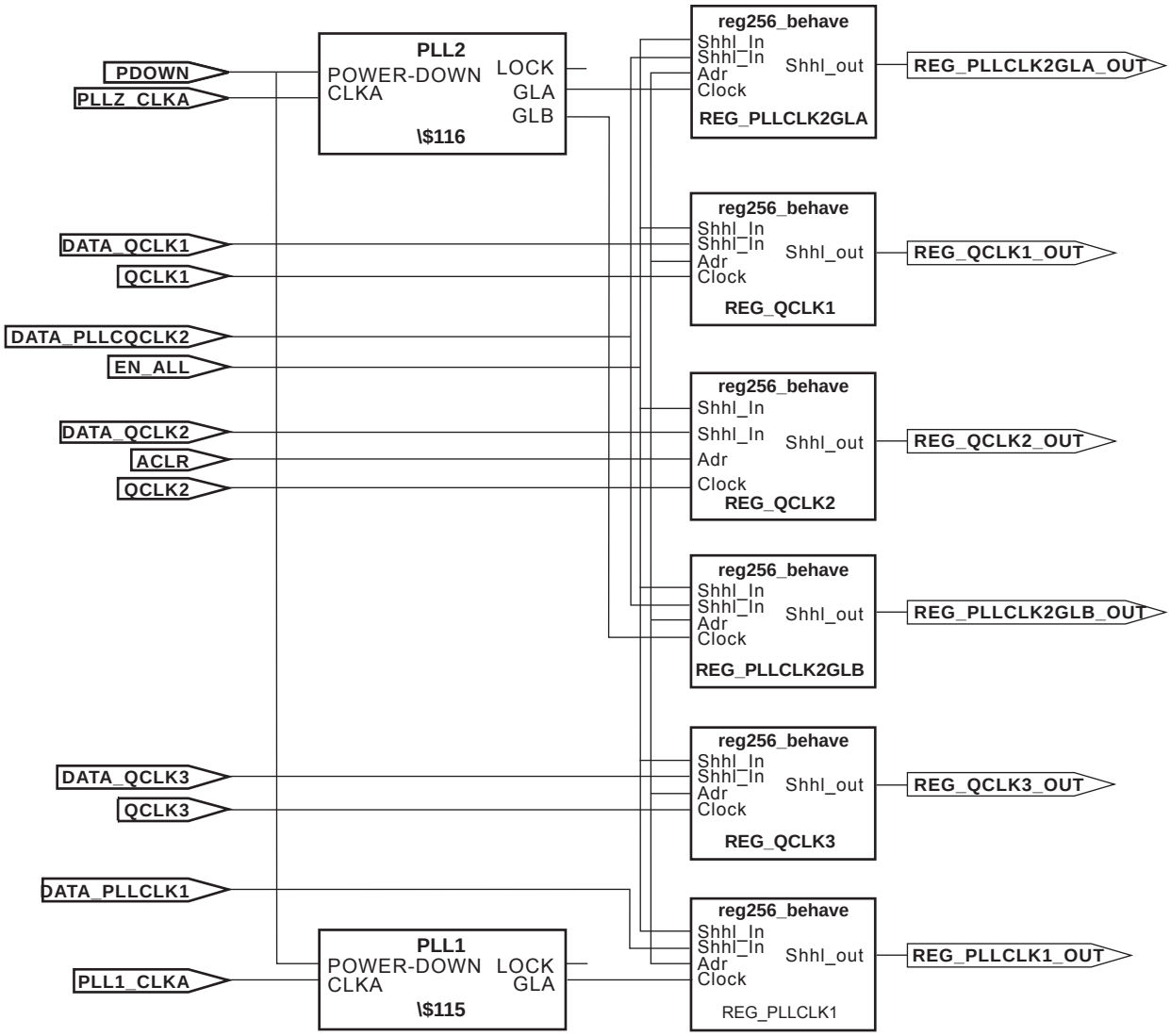


***Figure 3-19*** **• Block Diagram of the Global Management Example Design**

### Step 1

Run Synthesis with default options. The Synplicity log shows the following device utilization:

Cell usage:

| | cell count | area | count*area |
|---|---|---|---|
| DFN1E1C1 | 1536 | 2.0 | 3072.0 |
| BUFF | 278 | 1.0 | 278.0 |
| INBUF | 10 | 0.0 | 0.0 |
| VCC | 9 | 0.0 | 0.0 |
| GND | 9 | 0.0 | 0.0 |
| OUTBUF | 6 | 0.0 | 0.0 |
| CLKBUF | 3 | 0.0 | 0.0 |
| PLL | 2 | 0.0 | 0.0 |
| TOTAL | 1853 | | 3350.0 |

### Step 2

Run Compile with the **Promote regular nets whose fanout is greater than** option selected in Designer; you will see the following in the Compile report:

```
Device utilization report:
==========================
CORE               Used:   1536  Total:  13824   (11.11%)
IO (W/ clocks)     Used:     19  Total:    147   (12.93%)
Differential IO    Used:      0  Total:     65    (0.00%)
GLOBAL             Used:      8  Total:     18   (44.44%)
PLL                Used:      2  Total:      2  (100.00%)
RAM/FIFO           Used:      0  Total:     24    (0.00%)
FlashROM           Used:      0  Total:      1    (0.00%)
……————————————————
The following nets have been assigned to a global resource:
Fanout  Type           Name
---------------------------
1536    INT_NET        Net    : EN_ALL_c
                       Driver: EN_ALL_pad_CLKINT
                       Source: AUTO PROMOTED
1536    SET/RESET_NET  Net    : ACLR_c
                       Driver: ACLR_pad_CLKINT
                       Source: AUTO PROMOTED
256     CLK_NET        Net    : QCLK1_c
                       Driver: QCLK1_pad_CLKINT
                       Source: AUTO PROMOTED
256     CLK_NET        Net    : QCLK2_c
                       Driver: QCLK2_pad_CLKINT
                       Source: AUTO PROMOTED
256     CLK_NET        Net    : QCLK3_c
                       Driver: QCLK3_pad_CLKINT
                       Source: AUTO PROMOTED
256     CLK_NET        Net    : $1N14
                       Driver: $1I5/Core
                       Source: ESSENTIAL
256     CLK_NET        Net    : $1N12
                       Driver: $1I6/Core
                       Source: ESSENTIAL
256     CLK_NET        Net    : $1N10
                       Driver: $1I6/Core
                       Source: ESSENTIAL
```

Designer will promote five more signals to global due to high fanout. There are eight signals assigned to global networks.

During Layout, Designer will assign two of the signals to quadrant global locations.

### Step 3 (optional)

You can also assign the QCLK1_c and QCLK2_c nets to quadrant regions using the following PDC commands:

```
assign_local_clock –net QCLK1_c  –type quadrant UL
assign_local_clock –net QCLK2_c  –type quadrant LL
```

### Step 4

Import this PDC with the netlist and run Compile again. You will see the following in the Compile report:

```
The following nets have been assigned to a global resource:
Fanout  Type          Name
--------------------------
1536    INT_NET       Net   : EN_ALL_c
                      Driver: EN_ALL_pad_CLKINT
                      Source: AUTO PROMOTED
1536    SET/RESET_NET Net   : ACLR_c
                      Driver: ACLR_pad_CLKINT
                      Source: AUTO PROMOTED
256     CLK_NET       Net   : QCLK3_c
                      Driver: QCLK3_pad_CLKINT
                      Source: AUTO PROMOTED
256     CLK_NET       Net   : $1N14
                      Driver: $1I5/Core
                      Source: ESSENTIAL
256     CLK_NET       Net   : $1N12
                      Driver: $1I6/Core
                      Source: ESSENTIAL
256     CLK_NET       Net   : $1N10
                      Driver: $1I6/Core
                      Source: ESSENTIAL
The following nets have been assigned to a quadrant clock resource using PDC:
Fanout  Type          Name
--------------------------
256     CLK_NET       Net   : QCLK1_c
                      Driver: QCLK1_pad_CLKINT
                      Region: quadrant_UL
256     CLK_NET       Net   : QCLK2_c
                      Driver: QCLK2_pad_CLKINT
                      Region: quadrant_LL
```

### Step 5

Run Layout.

## Global Management in PLL Design

This section describes the legal global network connections to PLLs in the low power flash devices. For detailed information on using PLLs, refer to "Clock Conditioning Circuits in Low Power Flash Devices and Mixed Signal FPGAs" section on page 61. Microsemi recommends that you use the dedicated global pins to directly drive the reference clock input of the associated PLL for reduced propagation delays and clock distortion. However, low power flash devices offer the flexibility to connect other signals to reference clock inputs. Each PLL is associated with three global networks (Figure 3-5 on page 36). There are some limitations, such as when trying to use the global and PLL at the same time:

- If you use a PLL with only primary output, you can still use the remaining two free global networks.
- If you use three globals associated with a PLL location, you cannot use the PLL on that location.
- If the YB or YC output is used standalone, it will occupy one global, even though this signal does not go to the global network.

### Using Spines of Occupied Global Networks

When a signal is assigned to a global network, the flash switches are programmed to set the MUX select lines (explained in the "Clock Aggregation Architecture" section on page 45) to drive the spines of that network with the global net. However, if the global net is restricted from reaching into the scope of a spine, the MUX drivers of that spine are available for other high-fanout or critical signals (Figure 3-20).

For example, if you want to limit the CLK1_c signal to the left half of the chip and want to use the right side of the same global network for CLK2_c, you can add the following PDC commands:

```
define_region -name region1 -type inclusive 0 0 34 29
assign_net_macros region1 CLK1_c
assign_local_clock –net CLK2_c –type chip B2
```

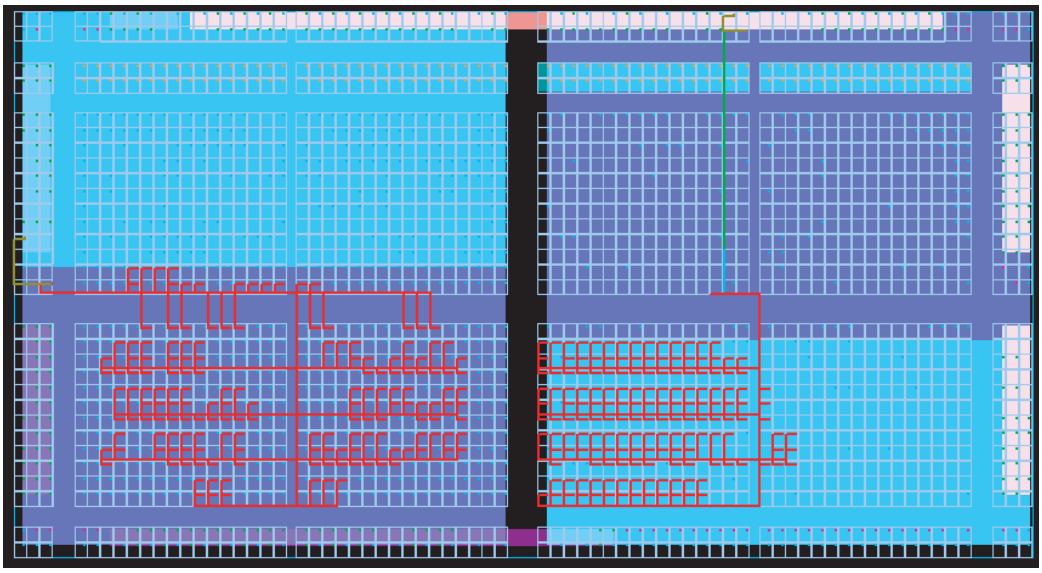

***Figure 3-20*** **• Design Example Using Spines of Occupied Global Networks**

## Conclusion

IGLOO, Fusion, and ProASIC3 devices contain 18 global networks: 6 chip global networks and 12 quadrant global networks. These global networks can be segmented into local low-skew networks called spines. The spines provide low-skew networks for the high-fanout signals of a design. These allow you up to 252 different internal/external clocks in an A3PE3000 device. This document describes the architecture for the global network, plus guidelines and methodologies in assigning signals to globals and spines.

## Related Documents

### User's Guides

*IGLOO, ProASIC3, SmartFusion, and Fusion Macro Library Guide*

http://www.microsemi.com/soc/documents/pa3_libguide_ug.pdf

# List of Changes

The following table lists critical changes that were made in each revision of the chapter.

| Date | Changes | Page |
|---|---|---|
| July 2010 | This chapter is no longer published separately with its own part number and version but is now part of several FPGA fabric user's guides. | N/A |
| | Notes were added where appropriate to point out that IGLOO nano and ProASIC3 nano devices do not support differential inputs (SAR 21449). | N/A |
| | The "Global Architecture" section and "VersaNet Global Network Distribution" section were revised for clarity (SARs 20646, 24779). | 31, 33 |
| | The "I/O Banks and Global I/Os" section was moved earlier in the document, renamed to "Chip and Quadrant Global I/Os", and revised for clarity. Figure 3-4 • Global Connections Details, Figure 3-6 • Global Inputs, Table 3-2 • Chip Global Pin Name, and Table 3-3 • Quadrant Global Pin Name are new (SARs 20646, 24779). | 35 |
| | The "Clock Aggregation Architecture" section was revised (SARs 20646, 24779). | 41 |
| | Figure 3-7 • Chip Global Aggregation was revised (SARs 20646, 24779). | 43 |
| | The "Global Macro and Placement Selections" section is new (SARs 20646, 24779). | 48 |
| v1.4<br>(December 2008) | The "Global Architecture" section was updated to include 10 k devices, and to include information about VersaNet global support for IGLOO nano devices. | 31 |
| | The Table 3-1 • Flash-Based FPGAs was updated to include IGLOO nano and ProASIC3 nano devices. | 32 |
| | The "VersaNet Global Network Distribution" section was updated to include 10 k devices and to note an exception in global lines for nano devices. | 33 |
| | Figure 3-2 • Simplified VersaNet Global Network (30 k gates and below) is new. | 34 |
| | The "Spine Architecture" section was updated to clarify support for 10 k and nano devices. | 41 |
| | Table 3-4 • Globals/Spines/Rows for IGLOO and ProASIC3 Devices was updated to include IGLOO nano and ProASIC3 nano devices. | 41 |
| | The figure in the CLKBUF_LVDS/LVPECL row of Table 3-8 • Clock Macros was updated to change CLKBIBUF to CLKBUF. | 46 |
| v1.3<br>(October 2008) | A third bullet was added to the beginning of the "Global Architecture" section: In Fusion devices, the west CCC also contains a PLL core. In the two larger devices (AFS600 and AFS1500), the west and east CCCs each contain a PLL. | 31 |
| | The "Global Resource Support in Flash-Based Devices" section was revised to include new families and make the information more concise. | 32 |
| | Table 3-4 • Globals/Spines/Rows for IGLOO and ProASIC3 Devices was updated to include A3PE600/L in the device column. | 41 |
| | Table note 1 was revised in Table 3-9 • I/O Standards within CLKBUF to include AFS600 and AFS1500. | 47 |
| v1.2<br>(June 2008) | The following changes were made to the family descriptions in Table 3-1 • Flash-Based FPGAs:<br>• ProASIC3L was updated to include 1.5 V.<br>• The number of PLLs for ProASIC3E was changed from five to six. | 32 |

| Date | Changes | Page |
|---|---|---|
| v1.1<br>(March 2008) | The "Global Architecture" section was updated to include the IGLOO PLUS family. The bullet was revised to include that the west CCC does not contain a PLL core in 15 k and 30 k devices. Instances of "A3P030 and AGL030 devices" were replaced with "15 k and 30 k gate devices." | 31 |
| v1.1<br>(continued) | Table 3-1 • Flash-Based FPGAs and the accompanying text was updated to include the IGLOO PLUS family. The "IGLOO Terminology" section and "ProASIC3 Terminology" section are new. | 32 |
| | The "VersaNet Global Network Distribution" section, "Spine Architecture" section, the note in Figure 3-1 • Overview of VersaNet Global Network and Device Architecture, and the note in Figure 3-3 • Simplified VersaNet Global Network (60 k gates and above) were updated to include mention of 15 k gate devices. | 33, 34 |
| | Table 3-4 • Globals/Spines/Rows for IGLOO and ProASIC3 Devices was updated to add the A3P015 device, and to revise the values for clock trees, globals/spines per tree, and globals/spines per device for the A3P030 and AGL030 devices. | 41 |
| | Table 3-5 • Globals/Spines/Rows for IGLOO PLUS Devices is new. | 42 |
| | CLKBUF_LVCMOS12 was added to Table 3-9 • I/O Standards within CLKBUF. | 47 |
| | The "User's Guides" section was updated to include the three different I/O Structures chapters for ProASIC3 and IGLOO device families. | 58 |
| v1.0<br>(January 2008) | Figure 3-3 • Simplified VersaNet Global Network (60 k gates and above) was updated. | 34 |
| | The "Naming of Global I/Os" section was updated. | 35 |
| | The "Using Global Macros in Synplicity" section was updated. | 50 |
| | The "Global Promotion and Demotion Using PDC" section was updated. | 51 |
| | The "Designer Flow for Global Assignment" section was updated. | 53 |
| | The "Simple Design Example" section was updated. | 55 |
| 51900087-0/1.05<br>(January 2005) | Table 3-4 • Globals/Spines/Rows for IGLOO and ProASIC3 Devices was updated. | 41 |

# 4 – Clock Conditioning Circuits in Low Power Flash Devices and Mixed Signal FPGAs

## Introduction

This document outlines the following device information: Clock Conditioning Circuit (CCC) features, PLL core specifications, functional descriptions, software configuration information, detailed usage information, recommended board-level considerations, and other considerations concerning clock conditioning circuits and global networks in low power flash devices or mixed signal FPGAs.

## Overview of Clock Conditioning Circuitry

In Fusion, IGLOO, and ProASIC3 devices, the CCCs are used to implement frequency division, frequency multiplication, phase shifting, and delay operations. The CCCs are available in six chip locations—each of the four chip corners and the middle of the east and west chip sides. For device-specific variations, refer to the "Device-Specific Layout" section on page 78.

The CCC is composed of the following:

- PLL core
- 3 phase selectors
- 6 programmable delays and 1 fixed delay that advances/delays phase
- 5 programmable frequency dividers that provide frequency multiplication/division (not shown in Figure 4-6 on page 71 because they are automatically configured based on the user's required frequencies)
- 1 dynamic shift register that provides CCC dynamic reconfiguration capability

Figure 4-1 provides a simplified block diagram of the physical implementation of the building blocks in each of the CCCs.

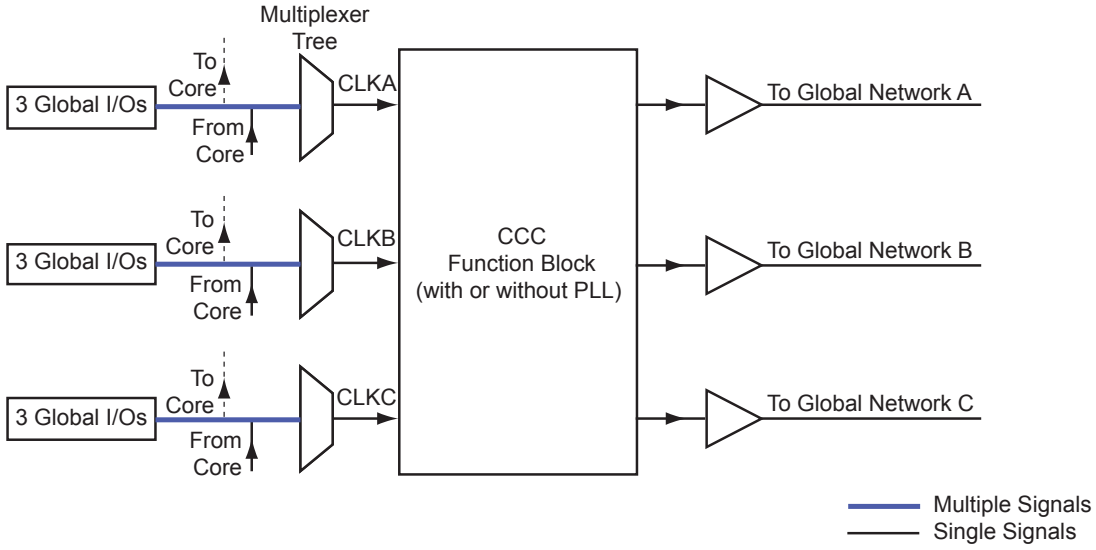


***Figure 4-1*** **• Overview of the CCCs Offered in Fusion, IGLOO, and ProASIC3**

Each CCC can implement up to three independent global buffers (with or without programmable delay) or a PLL function (programmable frequency division/multiplication, phase shift, and delays) with up to three global outputs. Unused global outputs of a PLL can be used to implement independent global buffers, up to a maximum of three global outputs for a given CCC.

## CCC Programming

The CCC block is fully configurable, either via flash configuration bits set in the programming bitstream or through an asynchronous interface. This asynchronous dedicated shift register interface is dynamically accessible from inside the low power flash devices to permit parameter changes, such as PLL divide ratios and delays, during device operation.

To increase the versatility and flexibility of the clock conditioning system, the CCC configuration is determined either by the user during the design process, with configuration data being stored in flash memory as part of the device programming procedure, or by writing data into a dedicated shift register during normal device operation.

This latter mode allows the user to dynamically reconfigure the CCC without the need for core programming. The shift register is accessed through a simple serial interface. Refer to the "UJTAG Applications in Microsemi's Low Power Flash Devices" section on page 297 or the application note *Using Global Resources in Actel Fusion Devices*.

## Global Resources

Low power flash and mixed signal devices provide three global routing networks (GLA, GLB, and GLC) for each of the CCC locations. There are potentially many I/O locations; each global I/O location can be chosen from only one of three possibilities. This is controlled by the multiplexer tree circuitry in each global network. Once the I/O location is selected, the user has the option to utilize the CCCs before the signals are connected to the global networks. The CCC in each location (up to six) has the same structure, so generating the CCC macros is always done with an identical software GUI. The CCCs in the corner locations drive the quadrant global networks, and the CCCs in the middle of the east and west chip sides drive the chip global networks. The quadrant global networks span only a quarter of the device, while the chip global networks span the entire device. For more details on global resources offered in low power flash devices, refer to the "Global Resources in Low Power Flash Devices" section on page 31.

A global buffer can be placed in any of the three global locations (CLKA-GLA, CLKB-GLB, or CLKC-GLC) of a given CCC. A PLL macro uses the CLKA CCC input to drive its reference clock. It uses the GLA and, optionally, the GLB and GLC global outputs to drive the global networks. A PLL macro can also drive the YB and YC regular core outputs. The GLB (or GLC) global output cannot be reused if the YB (or YC) output is used. Refer to the "PLL Macro Signal Descriptions" section on page 68 for more information.

Each global buffer, as well as the PLL reference clock, can be driven from one of the following:

- 3 dedicated single-ended I/Os using a hardwired connection
- 2 dedicated differential I/Os using a hardwired connection (not supported for IGLOO nano or ProASIC3 nano devices)
- The FPGA core

# CCC Support in Microsemi's Flash Devices

The flash FPGAs listed in Table 4-1 support the CCC feature and the functions described in this document.

***Table 4-1* • Flash-Based FPGAs**

| Series | Family* | Description |
|---|---|---|
| IGLOO | IGLOO | Ultra-low power 1.2 V to 1.5 V FPGAs with Flash*Freeze technology |
| | IGLOOe | Higher density IGLOO FPGAs with six PLLs and additional I/O standards |
| | IGLOO PLUS | IGLOO FPGAs with enhanced I/O capabilities |
| | IGLOO nano | The industry's lowest-power, smallest-size solution |
| ProASIC3 | ProASIC3 | Low power, high-performance 1.5 V FPGAs |
| | ProASIC3E | Higher density ProASIC3 FPGAs with six PLLs and additional I/O standards |
| | ProASIC3 nano | Lowest-cost solution with enhanced I/O capabilities |
| | ProASIC3L | ProASIC3 FPGAs supporting 1.2 V to 1.5 V with Flash*Freeze technology |
| | RT ProASIC3 | Radiation-tolerant RT3PE600L and RT3PE3000L |
| | Military ProASIC3/EL | Military temperature A3PE600L, A3P1000, and A3PE3000L |
| | Automotive ProASIC3 | ProASIC3 FPGAs qualified for automotive applications |
| Fusion | Fusion | Mixed signal FPGA integrating ProASIC3 FPGA fabric, programmable analog block, support for ARM® Cortex™-M1 soft processors, and flash memory into a monolithic device |

*Note: *The device names link to the appropriate datasheet, including product brief, DC and switching characteristics, and packaging information.*

## *IGLOO Terminology*

In documentation, the terms IGLOO series and IGLOO devices refer to all of the IGLOO devices as listed in Table 4-1. Where the information applies to only one product line or limited devices, these exclusions will be explicitly stated.

## *ProASIC3 Terminology*

In documentation, the terms ProASIC3 series and ProASIC3 devices refer to all of the ProASIC3 devices as listed in Table 4-1. Where the information applies to only one product line or limited devices, these exclusions will be explicitly stated.

To further understand the differences between the IGLOO and ProASIC3 devices, refer to the *Industry's Lowest Power FPGAs Portfolio*.

# Global Buffers with No Programmable Delays

Access to the global / quadrant global networks can be configured directly from the global I/O buffer, bypassing the CCC functional block (as indicated by the dotted lines in Figure 4-1 on page 61). Internal signals driven by the FPGA core can use the global / quadrant global networks by connecting via the routed clock input of the multiplexer tree.

There are many specific CLKBUF macros supporting the wide variety of single-ended I/O inputs (CLKBUF) and differential I/O standards (CLKBUF_LVDS/LVPECL) in the low power flash families. They are used when connecting global I/Os directly to the global/quadrant networks.

Note: IGLOO nano and ProASIC nano devices do not support differential inputs.

When an internal signal needs to be connected to the global/quadrant network, the CLKINT macro is used to connect the signal to the routed clock input of the network's MUX tree.

To utilize direct connection from global I/Os or from internal signals to the global/quadrant networks, CLKBUF, CLKBUF_LVPECL/LVDS, and CLKINT macros are used (Figure 4-2).

- The CLKBUF and CLKBUF_LVPECL/LVDS[1] macros are composite macros that include an I/O macro driving a global buffer, which uses a hardwired connection.
- The CLKBUF, CLKBUF_LVPECL/LVDS[1] and CLKINT macros are pass-through clock sources and do not use the PLL or provide any programmable delay functionality.
- The CLKINT macro provides a global buffer function driven internally by the FPGA core.

The available CLKBUF macros are described in the *IGLOO, ProASIC3, SmartFusion, and Fusion Macro Library Guide*.

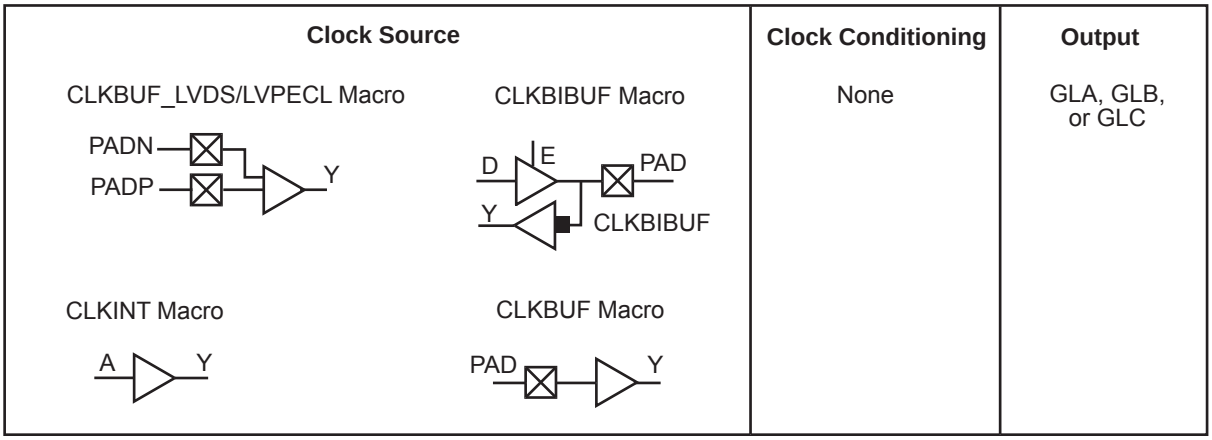


*Note: IGLOO nano and ProASIC nano devices do not support differential inputs.*

***Figure 4-2* • CCC Options: Global Buffers with No Programmable Delay**

# Global Buffer with Programmable Delay

Clocks requiring clock adjustments can utilize the programmable delay cores before connecting to the global / quadrant global networks. A maximum of 18 CCC global buffers can be instantiated in a device—three per CCC and up to six CCCs per device.

Each CCC functional block contains a programmable delay element for each of the global networks (up to three), and users can utilize these features by using the corresponding macro (Figure 4-3 on page 65).

1. *B-LVDS and M-LVDS are supported with the LVDS macro.*

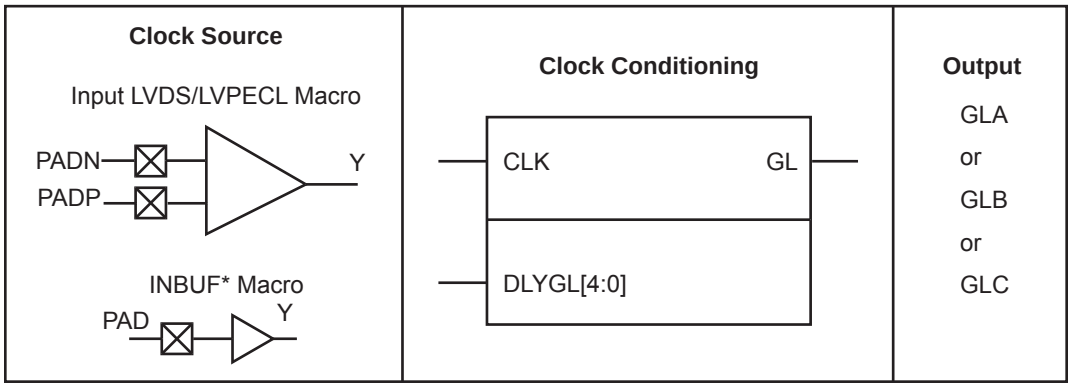


*Notes:*

1. *For INBUF* driving a PLL macro or CLKDLY macro, the I/O will be hard-routed to the CCC; i.e., will be placed by software to a dedicated Global I/O.*
2. *IGLOO nano and ProASIC3 nano devices do not support differential inputs.*

***Figure 4-3* • CCC Options: Global Buffers with Programmable Delay**

The CLKDLY macro is a pass-through clock source that does not use the PLL, but provides the ability to delay the clock input using a programmable delay. The CLKDLY macro takes the selected clock input and adds a user-defined delay element. This macro generates an output clock phase shift from the input clock.

The CLKDLY macro can be driven by an INBUF* macro to create a composite macro, where the I/O macro drives the global buffer (with programmable delay) using a hardwired connection. In this case, the software will automatically place the dedicated global I/O in the appropriate locations. Many specific INBUF macros support the wide variety of single-ended and differential I/O standards supported by the low power flash family. The available INBUF macros are described in the *IGLOO, ProASIC3, SmartFusion, and Fusion Macro Library Guide.*

The CLKDLY macro can be driven directly from the FPGA core. The CLKDLY macro can also be driven from an I/O that is routed through the FPGA regular routing fabric. In this case, users must instantiate a special macro, PLLINT, to differentiate the clock input driven by the hardwired I/O connection.

The visual CLKDLY configuration in the SmartGen area of the Microsemi Libero System-on-Chip (SoC) and Designer tools allows the user to select the desired amount of delay and configures the delay elements appropriately. SmartGen also allows the user to select the input clock source. SmartGen will automatically instantiate the special macro, PLLINT, when needed.

## CLKDLY Macro Signal Descriptions

The CLKDLY macro supports one input and one output. Each signal is described in Table 4-2.

***Table 4-2* • Input and Output Description of the CLKDLY Macro**

| Signal | Name | I/O | Description |
|---|---|---|---|
| CLK | Reference Clock | Input | Reference clock input |
| GL | Global Output | Output | Primary output clock to respective global/quadrant clock networks |

## CLKDLY Macro Usage

When a CLKDLY macro is used in a CCC location, the programmable delay element is used to allow the clock delays to go to the global network. In addition, the user can bypass the PLL in a CCC location integrated with a PLL, but use the programmable delay that is associated with the global network by instantiating the CLKDLY macro. The same is true when using programmable delay elements in a CCC location with no PLLs (the user needs to instantiate the CLKDLY macro). There is no difference between the programmable delay elements used for the PLL and the CLKDLY macro. The CCC will be configured to use the programmable delay elements in accordance with the macro instantiated by the user.

As an example, if the PLL is not used in a particular CCC location, the designer is free to specify up to three CLKDLY macros in the CCC, each of which can have its own input frequency and delay adjustment options. If the PLL core is used, assuming output to only one global clock network, the other two global clock networks are free to be used by either connecting directly from the global inputs or connecting from one or two CLKDLY macros for programmable delay.

The programmable delay elements are shown in the block diagram of the PLL block shown in Figure 4-6 on page 71. Note that any CCC locations with no PLL present contain only the programmable delay blocks going to the global networks (labeled "Programmable Delay Type 2"). Refer to the "Clock Delay Adjustment" section on page 86 for a description of the programmable delay types used for the PLL. Also refer to Table 4-14 on page 94 for Programmable Delay Type 1 step delay values, and Table 4-15 on page 94 for Programmable Delay Type 2 step delay values. CCC locations with a PLL present can be configured to utilize only the programmable delay blocks (Programmable Delay Type 2) going to the global networks A, B, and C.

Global network A can be configured to use only the programmable delay element (bypassing the PLL) if the PLL is not used in the design. Figure 4-6 on page 71 shows a block diagram of the PLL, where the programmable delay elements are used for the global networks (Programmable Delay Type 2).

# Global Buffers with PLL Function

Clocks requiring frequency synthesis or clock adjustments can utilize the PLL core before connecting to the global / quadrant global networks. A maximum of 18 CCC global buffers can be instantiated in a device—three per CCC and up to six CCCs per device. Each PLL core can generate up to three global/quadrant clocks, while a clock delay element provides one.

The PLL functionality of the clock conditioning block is supported by the PLL macro.

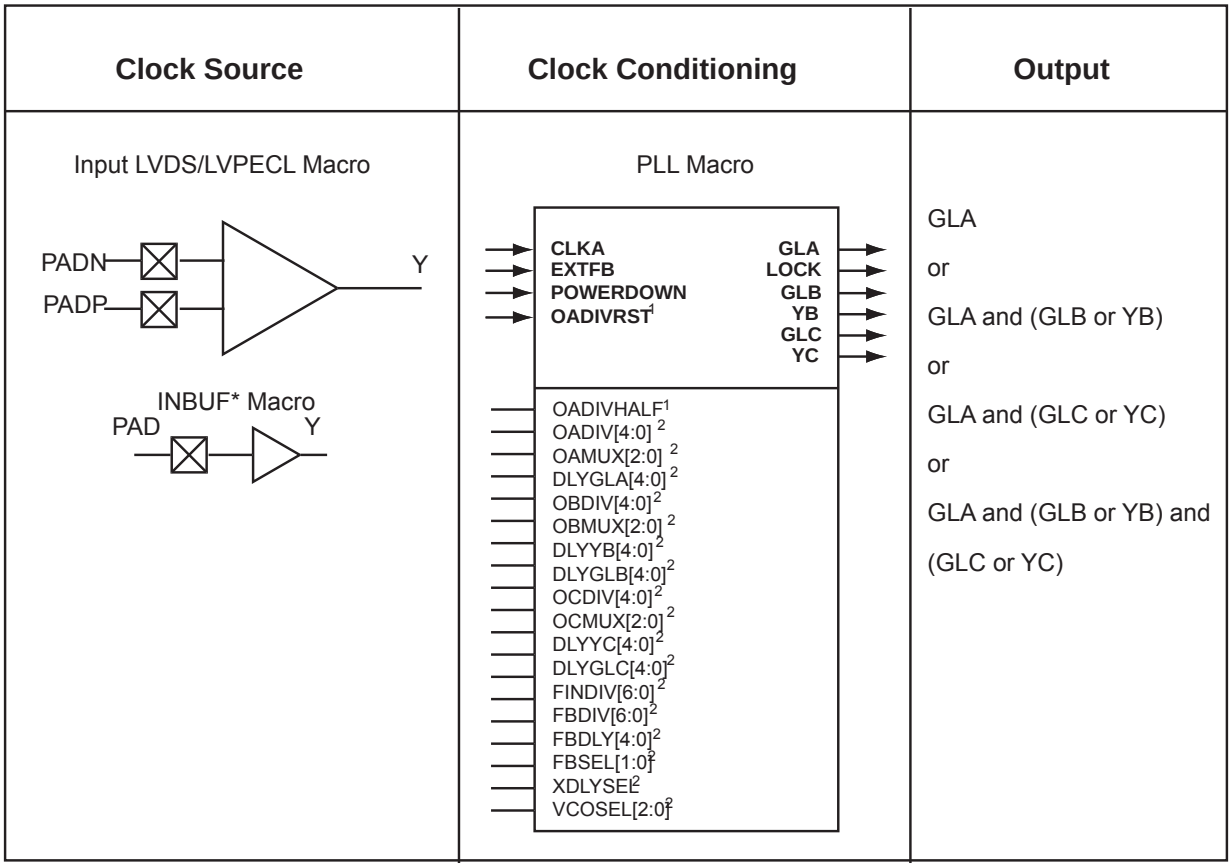


*Notes:*

1. *For Fusion only.*
2. *Refer to the* IGLOO, ProASIC3, SmartFusion, and Fusion Macro Library Guide *for more information.*
3. *For INBUF* driving a PLL macro or CLKDLY macro, the I/O will be hard-routed to the CCC; i.e., will be placed by software to a dedicated Global I/O.*
4. *IGLOO nano and ProASIC3 nano devices do not support differential inputs.*

***Figure 4-4* • CCC Options: Global Buffers with PLL**

The PLL macro provides five derived clocks (three independent) from a single reference clock. The PLL macro also provides power-down input and lock output signals. The additional inputs shown on the macro are configuration settings, which are configured through the use of SmartGen. For manual setting of these bits refer to the *IGLOO, ProASIC3, SmartFusion, and Fusion Macro Library Guide* for details.

Figure 4-6 on page 71 illustrates the various clock output options and delay elements.

## PLL Macro Signal Descriptions

The PLL macro supports two inputs and up to six outputs. Table 4-3 gives a description of each signal.

***Table 4-3* • Input and Output Signals of the PLL Block**

| Signal | Name | I/O | Description |
|---|---|---|---|
| CLKA | Reference Clock | Input | Reference clock input for PLL core; input clock for primary output clock, GLA |
| OADIVRST | Reset Signal for the Output Divider A | Input | For Fusion only. OADIVRST can be used when you bypass the PLL core (i.e., OAMUX = 001). The purpose of the OADIVRST signals is to reset the output of the final clock divider to synchronize it with the input to that divider when the PLL is bypassed. The signal is active on a low to high transition. The signal must be low for at least one divider input. If PLL core is used, this signal is "don't care" and the internal circuitry will generate the reset signal for the synchronization purpose. |
| OADIVHALF | Output A Division by Half | Input | For Fusion only. Active high. Division by half feature. This feature can only be used when users bypass the PLL core (i.e., OAMUX = 001) and the RC Oscillator (RCOSC) drives the CLKA input. This can be used to divide the 100 MHz RC oscillator by a factor of 1.5, 2.5, 3.5, 4.5 ... 14.5). Refer to Table 4-18 on page 95 for more information. |
| EXTFB | External Feedback | Input | Allows an external signal to be compared to a reference clock in the PLL core's phase detector. |
| POWERDOWN | Power Down | Input | Active low input that selects power-down mode and disables the PLL. With the POWERDOWN signal asserted, the PLL core sends 0 V signals on all of the outputs. |
| GLA | Primary Output | Output | Primary output clock to respective global/quadrant clock networks |
| GLB | Secondary 1 Output | Output | Secondary 1 output clock to respective global/quadrant clock networks |
| YB | Core 1 Output | Output | Core 1 output clock to local routing network |
| GLC | Secondary 2 Output | Output | Secondary 2 output clock to respective global/quadrant clock networks |
| YC | Core 2 Output | Output | Core 2 output clock to local routing network |
| LOCK | PLL Lock Indicator | Output | Active high signal indicating that steady-state lock has been achieved between CLKA and the PLL feedback signal |

### *Input Clock*

The inputs to the input reference clock (CLKA) of the PLL can come from global input pins, regular I/O pins, or internally from the core. For Fusion families, the input reference clock can also be from the embedded RC oscillator or crystal oscillator.

### *Global Output Clocks*

GLA (Primary), GLB (Secondary 1), and GLC (Secondary 2) are the outputs of Global Multiplexer 1, Global Multiplexer 2, and Global Multiplexer 3, respectively. These signals (GLx) can be used to drive the high-speed global and quadrant networks of the low power flash devices.

A global multiplexer block consists of the input routing for selecting the input signal for the GLx clock and the output multiplexer, as well as delay elements associated with that clock.

### *Core Output Clocks*

YB and YC are known as Core Outputs and can be used to drive internal logic without using global network resources. This is especially helpful when global network resources must be conserved and utilized for other timing-critical paths.

YB and YC are identical to GLB and GLC, respectively, with the exception of a higher selectable final output delay. The SmartGen PLL Wizard will configure these outputs according to user specifications and can enable these signals with or without the enabling of Global Output Clocks.

The above signals can be enabled in the following output groupings in both internal and external feedback configurations of the static PLL:

- One output – GLA only
- Two outputs – GLA + (GLB and/or YB)
- Three outputs – GLA + (GLB and/or YB) + (GLC and/or YC)

## PLL Macro Block Diagram

As illustrated, the PLL supports three distinct output frequencies from a given input clock. Two of these (GLB and GLC) can be routed to the B and C global network access, respectively, and/or routed to the device core (YB and YC).

There are five delay elements to support phase control on all five outputs (GLA, GLB, GLC, YB, and YC).

There are delay elements in the feedback loop that can be used to advance the clock relative to the reference clock.

The PLL macro reference clock can be driven in the following ways:

1. By an INBUF* macro to create a composite macro, where the I/O macro drives the global buffer (with programmable delay) using a hardwired connection. In this case, the I/O must be placed in one of the dedicated global I/O locations.
2. Directly from the FPGA core.
3. From an I/O that is routed through the FPGA regular routing fabric. In this case, users must instantiate a special macro, PLLINT, to differentiate from the hardwired I/O connection described earlier.

During power-up, the PLL outputs will toggle around the maximum frequency of the voltage-controlled oscillator (VCO) gear selected. Toggle frequencies can range from 40 MHz to 250 MHz. This will continue as long as the clock input (CLKA) is constant (HIGH or LOW). This can be prevented by LOW assertion of the POWERDOWN signal.

The visual PLL configuration in SmartGen, a component of the Libero SoC and Designer tools, will derive the necessary internal divider ratios based on the input frequency and desired output frequencies selected by the user.

## Implementing EXTFB in ProASIC3/E Devices

When the external feedback (EXTFB) signal of the PLL in the ProASIC3/E devices is implemented, the phase detector of the PLL core receives the reference clock (CLKA) and EXTFB as inputs. EXTFB must be sourced as an INBUF macro and located at the global/chip clock location associated with the target PLL by Designer software. EXTFB cannot be sourced from the FPGA fabric.

The following example shows CLKA and EXTFB signals assigned to two global I/Os in the same global area of ProASIC3E device.

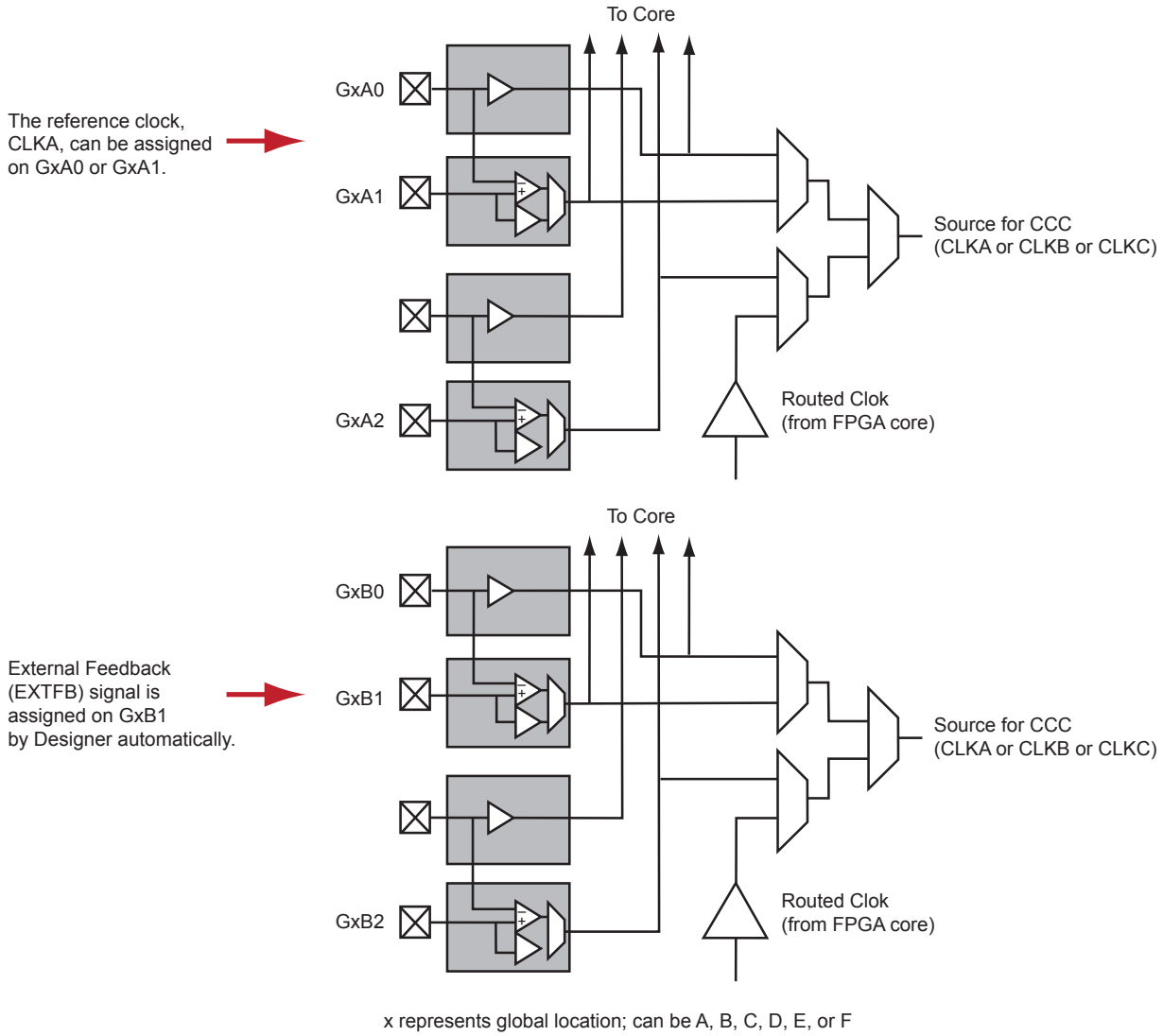


***Figure 4-5*** **• CLKA and EXTFB Assigned to Global I/Os**

SmartGen also allows the user to select the various delays and phase shift values necessary to adjust the phases between the reference clock (CLKA) and the derived clocks (GLA, GLB, GLC, YB, and YC). SmartGen allows the user to select the input clock source. SmartGen automatically instantiates the special macro, PLLINT, when needed.

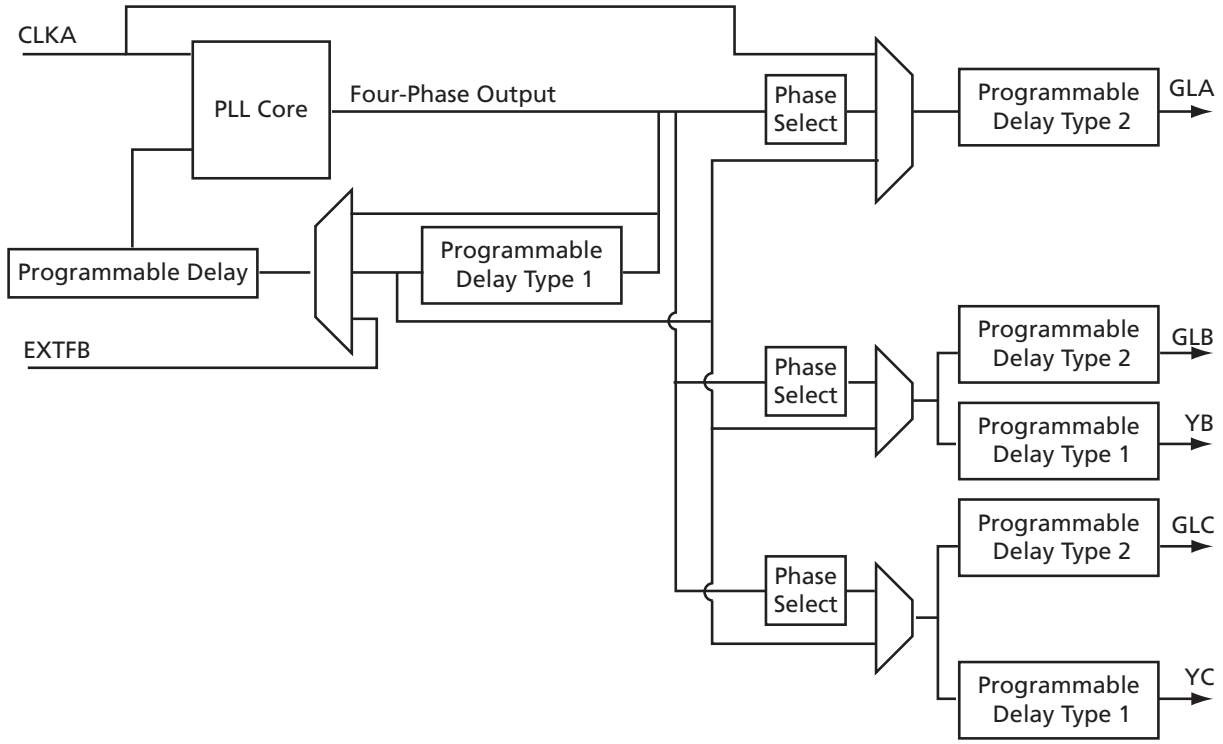


*Note: Clock divider and clock multiplier blocks are not shown in this figure or in SmartGen. They are automatically configured based on the user's required frequencies.*

***Figure 4-6* • CCC with PLL Block**

# Global Input Selections

Low power flash devices provide the flexibility of choosing one of the three global input pad locations available to connect to a CCC functional block or to a global / quadrant global network. Figure 4-7 on page 72 and Figure 4-8 on page 72 show the detailed architecture of each global input structure for 30 k gate devices and below, as well as 60 k gate devices and above, respectively. For 60 k gate devices and above (Figure 4-7 on page 72), if the single-ended I/O standard is chosen, there is flexibility to choose one of the global input pads (the first, second, and fourth input). Once chosen, the other I/O locations are used as regular I/Os. If the differential I/O standard is chosen (not applicable for IGLOO nano and ProASIC3 nano devices), the first and second inputs are considered as paired, and the third input is paired with a regular I/O.

The user then has the choice of selecting one of the two sets to be used as the clock input source to the CCC functional block. There is also the option to allow an internal clock signal to feed the global network or the CCC functional block. A multiplexer tree selects the appropriate global input for routing to the desired location. Note that the global I/O pads do not need to feed the global network; they can also be used as regular I/O pads.

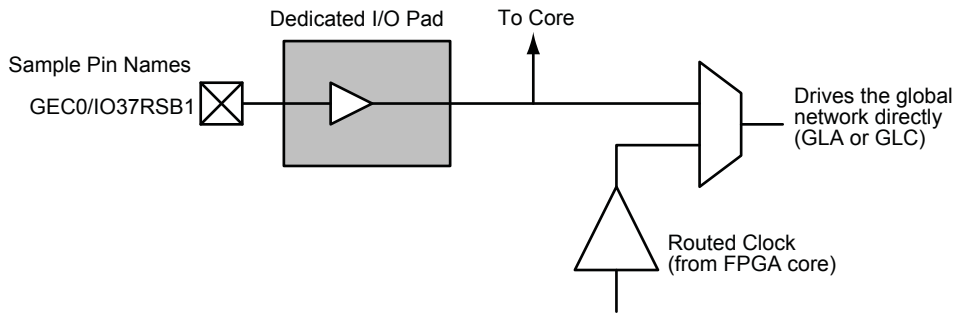


***Figure 4-7*** **• Clock Input Sources (30 k gates devices and below)**

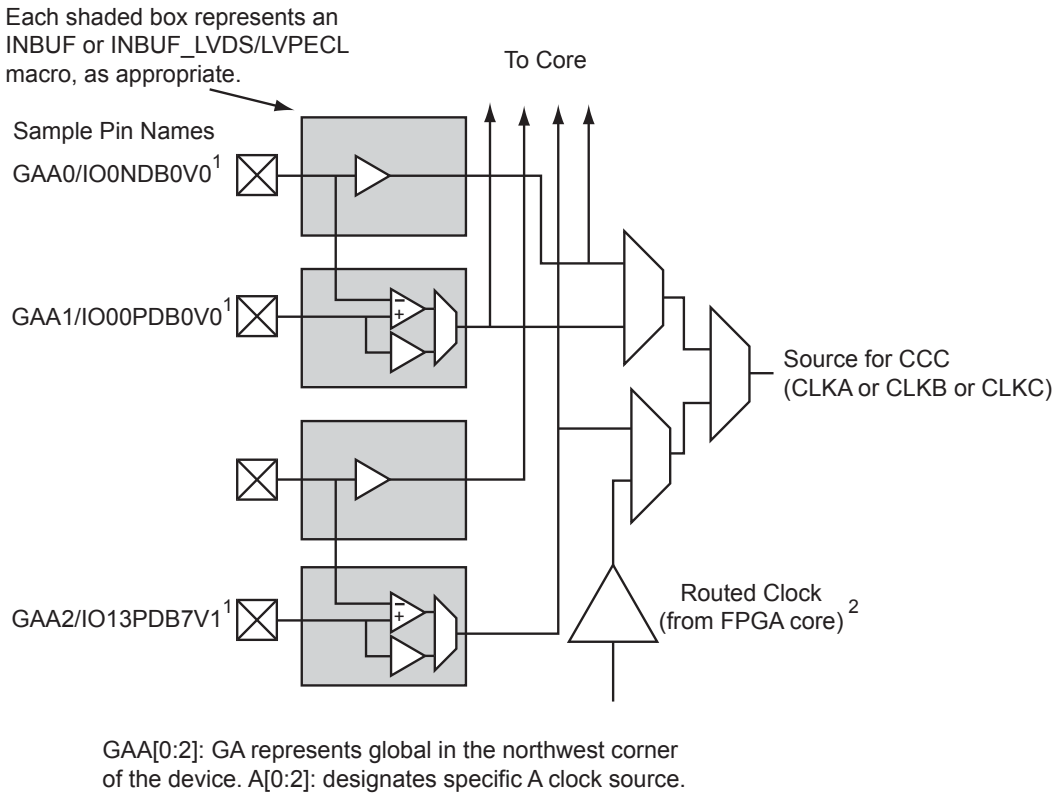


*Notes:*

1. *Represents the global input pins. Globals have direct access to the clock conditioning block and are not routed via the FPGA fabric. Refer to the "User I/O Naming Conventions in I/O Structures" chapter of the appropriate device user's guide.*
2. *Instantiate the routed clock source input as follows:*
   a) *Connect the output of a logic element to the clock input of a PLL, CLKDLY, or CLKINT macro.*
   b) *Do not place a clock source I/O (INBUF or INBUF_LVPECL/LVDS/B-LVDS/M-LVDS/DDR) in a relevant global pin location.*
3. *IGLOO nano and ProASIC3 nano devices do not support differential inputs.*

***Figure 4-8*** **• Clock Input Sources Including CLKBUF, CLKBUF_LVDS/LVPECL, and CLKINT (60 k gates devices and above)**

Each global buffer, as well as the PLL reference clock, can be driven from one of the following:

- 3 dedicated single-ended I/Os using a hardwired connection
- 2 dedicated differential I/Os using a hardwired connection (not applicable for IGLOO nano and ProASIC3 nano devices)
- The FPGA core

Since the architecture of the devices varies as size increases, the following list details I/O types supported for globals:

### IGLOO and ProASIC3

- LVDS-based clock sources are available only on 250 k gate devices and above (IGLOO nano and ProASIC3 nano devices do not support differential inputs).
- 60 k and 125 k gate devices support single-ended clock sources only.
- 15 k and 30 k gate devices support these inputs for CCC only and do not contain a PLL.
- nano devices:
  - 10 k, 15 k, and 20 k devices do not contain PLLs in the CCCs, and support only CLKBUF and CLKINT.
  - 60 k, 125 k, and 250 k devices support one PLL in the middle left CCC position. In the absence of the PLL, this CCC can be used by CLKBUF, CLKINT, and CLKDLY macros. The corner CCCs support CLKBUF, CLKINT, and CLKDLY.

### Fusion

- AFS600 and AFS1500: All single-ended, differential, and voltage-referenced I/O standards (Pro I/O).
- AFS090 and AFS250: All single-ended and differential I/O standards.

## Clock Sources for PLL and CLKDLY Macros

The input reference clock (CLKA for a PLL macro, CLK for a CLKDLY macro) can be accessed from different sources via the associated clock multiplexer tree. Each CCC has the option of choosing the source of the input clock from one of the following:

- Hardwired I/O
- External I/O
- Core Logic
- RC Oscillator (Fusion only)
- Crystal Oscillator (Fusion only)

The SmartGen macro builder tool allows users to easily create the PLL and CLKDLY macros with the desired settings. Microsemi strongly recommends using SmartGen to generate the CCC macros.

### Hardwired I/O Clock Source

Hardwired I/O refers to global input pins that are hardwired to the multiplexer tree, which directly accesses the CCC global buffers. These global input pins have designated pin locations and are indicated with the I/O naming convention *Gmn* (*m* refers to any one of the positions where the PLL core is available, and *n* refers to any one of the three global input MUXes and the pin number of the associated global location, *m*). Choosing this option provides the benefit of directly connecting to the CCC reference clock input, which provides less delay. See Figure 4-9 on page 74 for an example illustration of the connections, shown in red. If a CLKDLY macro is initiated to utilize the programmable delay element of the CCC, the clock input can be placed at one of nine dedicated global input pin locations. In other words, if Hardwired I/O is chosen as the input source, the user can decide to place the input pin in one of the GmA0, GmA1, GmA2, GmB0, GmB1, GmB2, GmC0, GmC1, or GmC2 locations of the low power flash devices. When a PLL macro is used to utilize the PLL core in a CCC location, the clock input of the PLL can only be connected to one of three GmA* global pin locations: GmA0, GmA1, or GmA2.

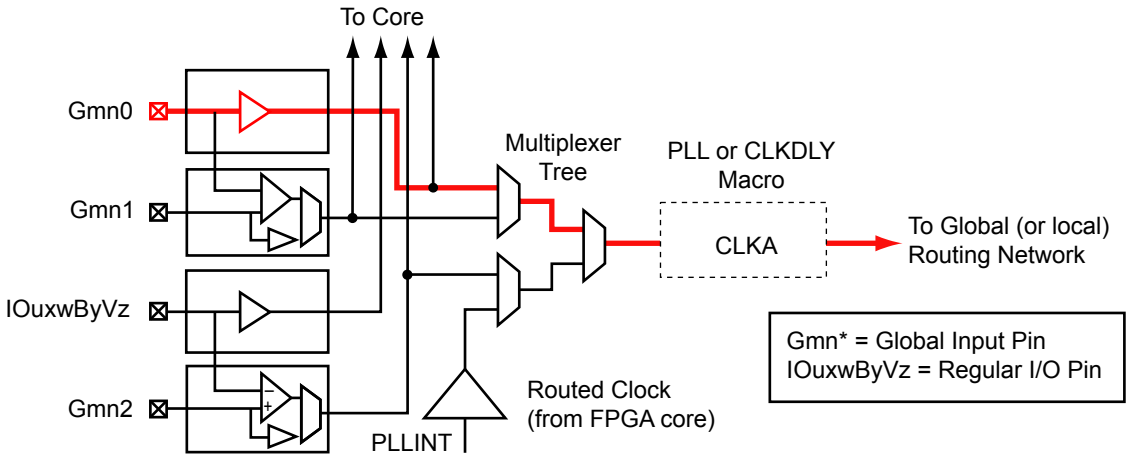


*Note: Fusion CCCs have additional source selections (RCOSC, XTAL).*

***Figure 4-9*** **• Illustration of Hardwired I/O (global input pins) Usage for IGLOO and ProASIC3 devices 60 k Gates and Larger**

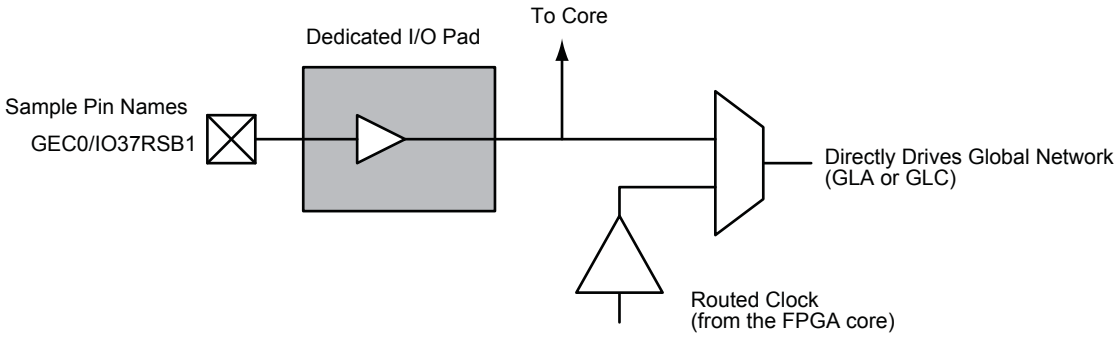


***Figure 4-10*** **• Illustration of Hardwired I/O (global input pins) Usage for IGLOO and ProASIC3 devices 30 k Gates and Smaller**

### External I/O Clock Source

*External I/O* refers to regular I/O pins. The clock source is instantiated with one of the various INBUF options and accesses the CCCs via internal routing. The user has the option of assigning this input to any of the I/Os labeled with the I/O convention *IOuxwByVz*. Refer to the "User I/O Naming Conventions in I/O Structures" chapter of the appropriate device user's guide, and for Fusion, refer to the *Fusion Family of Mixed Signal FPGAs* datasheet for more information. Figure 4-11 gives a brief explanation of external I/O usage. Choosing this option provides the freedom of selecting any user I/O location but introduces additional delay because the signal connects to the routed clock input through internal routing before connecting to the CCC reference clock input.

For the External I/O option, the routed signal would be instantiated with a PLLINT macro before connecting to the CCC reference clock input. This instantiation is conveniently done automatically by SmartGen when this option is selected. Microsemi recommends using the SmartGen tool to generate the CCC macro. The instantiation of the PLLINT macro results in the use of the routed clock input of the I/O to connect to the PLL clock input. If not using SmartGen, manually instantiate a PLLINT macro before the PLL reference clock to indicate that the regular I/O driving the PLL reference clock should be used (see Figure 4-11 for an example illustration of the connections, shown in red).

In the above two options, the clock source must be instantiated with one of the various INBUF macros. The reference clock pins of the CCC functional block core macros must be driven by regular input macros (INBUFs), not clock input macros.

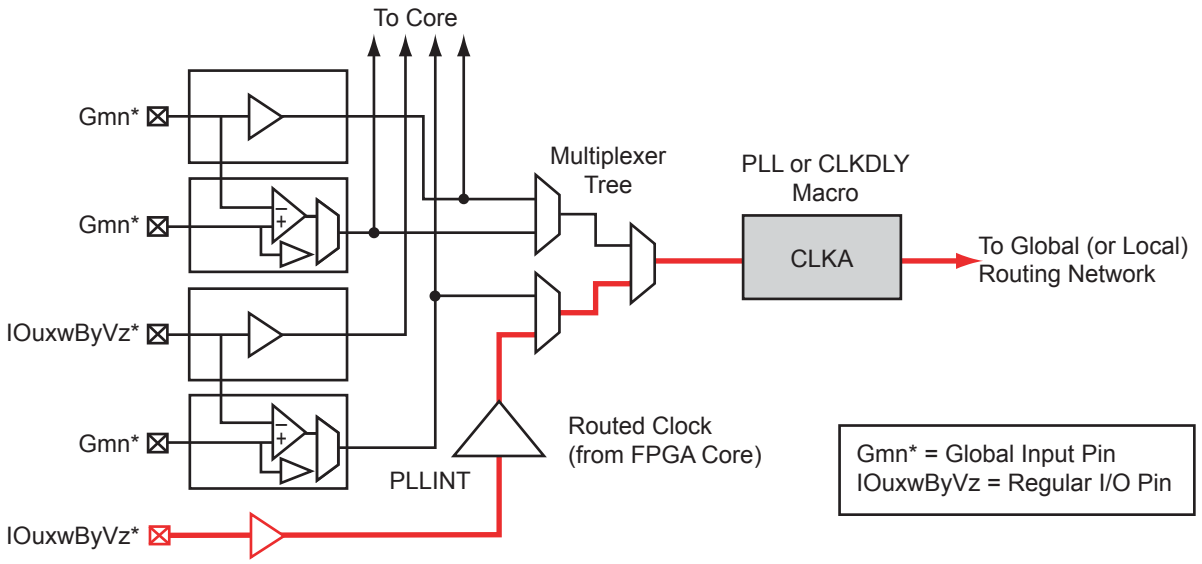


***Figure 4-11* • Illustration of External I/O Usage**

For Fusion devices, the input reference clock can also be from the embedded RC oscillator and crystal oscillator. In this case, the CCC configuration is the same as the hardwired I/O clock source, and users are required to instantiate the RC oscillator or crystal oscillator macro and connect its output to the input reference clock of the CCC block.

## Core Logic Clock Source

*Core logic* refers to internal routed nets. Internal routed signals access the CCC via the FPGA Core Fabric. Similar to the External I/O option, whenever the clock source comes internally from the core itself, the routed signal is instantiated with a PLLINT macro before connecting to the CCC clock input (see Figure 4-12 for an example illustration of the connections, shown in red).

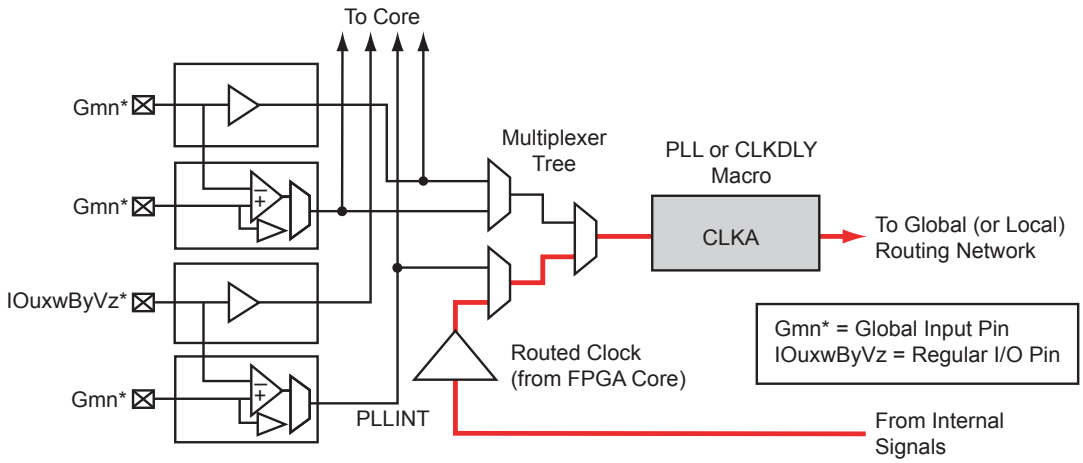


***Figure 4-12* • Illustration of Core Logic Usage**

For Fusion devices, the input reference clock can also be from the embedded RC oscillator and crystal oscillator. In this case, the CCC configuration is the same as the hardwired I/O clock source, and users are required to instantiate the RC oscillator or crystal oscillator macro and connect its output to the input reference clock of the CCC block.

## Available I/O Standards

***Table 4-4*** **• Available I/O Standards within CLKBUF and CLKBUF_LVDS/LVPECL Macros**

| |
|---|
| CLKBUF_LVCMOS5 |
| CLKBUF_LVCMOS33 [1] |
| CLKBUF_LVCMOS25 [2] |
| CLKBUF_LVCMOS18 |
| CLKBUF_LVCMOS15 |
| CLKBUF_PCI |
| CLKBUF_PCIX [3] |
| CLKBUF_GTL25 [2,3] |
| CLKBUF_GTL33 [2,3] |
| CLKBUF_GTLP25 [2,3] |
| CLKBUF_GTLP33 [2,3] |
| CLKBUF_HSTL_I [2,3] |
| CLKBUF_HSTL_II [2,3] |
| CLKBUF_SSTL3_I [2,3] |
| CLKBUF_SSTL3_II [2,3] |
| CLKBUF_SSTL2_I [2,3] |
| CLKBUF_SSTL2_II [2,3] |
| CLKBUF_LVDS [4,5] |
| CLKBUF_LVPECL[5] |

*Notes:*

1. *By default, the CLKBUF macro uses 3.3 V LVTTL I/O technology. For more details, refer to the IGLOO, ProASIC3, SmartFusion, and Fusion Macro Library Guide.*
2. *I/O standards only supported in ProASIC3E and IGLOOe families.*
3. *I/O standards only supported in the following Fusion devices: AFS600 and AFS1500.*
4. *B-LVDS and M-LVDS standards are supported by CLKBUF_LVDS.*
5. *Not supported for IGLOO nano and ProASIC3 nano devices.*

## Global Synthesis Constraints

The Synplify® synthesis tool, by default, allows six clocks in a design for Fusion, IGLOO, and ProASIC3. When more than six clocks are needed in the design, a user synthesis constraint attribute, syn_global_buffers, can be used to control the maximum number of clocks (up to 18) that can be inferred by the synthesis engine.

High-fanout nets will be inferred with clock buffers and/or internal clock buffers. If the design consists of CCC global buffers, they are included in the count of clocks in the design.

The subsections below discuss the clock input source (global buffers with no programmable delays) and the clock conditioning functional block (global buffers with programmable delays and/or PLL function) in detail.

# Device-Specific Layout

Two kinds of CCCs are offered in low power flash devices: CCCs with integrated PLLs, and CCCs without integrated PLLs (simplified CCCs). Table 4-5 lists the number of CCCs in various devices.

***Table 4-5* • Number of CCCs by Device Size and Package**

| Device | | Package | CCCs with Integrated PLLs | CCCs without Integrated PLLs (simplified CCC) |
|---|---|---|---|---|
| **ProASIC3** | **IGLOO** | | | |
| A3PN010 | AGLN010 | All | 0 | 2 |
| A3PN015 | AGLN015 | All | 0 | 2 |
| A3PN020 | AGLN020 | All | 0 | 2 |
| | AGLN060 | CS81 | 0 | 6 |
| A3PN060 | AGLN060 | All other packages | 1 | 5 |
| | AGLN125 | CS81 | 0 | 6 |
| A3PN125 | AGLN125 | All other packages | 1 | 5 |
| | AGLN250 | CS81 | 0 | 6 |
| A3PN250 | AGLN250 | All other packages | 1 | 5 |
| A3P015 | AGL015 | All | 0 | 2 |
| A3P030 | AGL030/AGLP030 | All | 0 | 2 |
| | AGL060/AGLP060 | CS121/CS201 | 0 | 6 |
| A3P060 | AGL060/AGLP060 | All other packages | 1 | 5 |
| A3P125 | AGL125/AGLP125 | All | 1 | 5 |
| A3P250/L | AGL250 | All | 1 | 5 |
| A3P400 | AGL400 | All | 1 | 5 |
| A3P600/L | AGL600 | All | 1 | 5 |
| A3P1000/L | AGL1000 | All | 1 | 5 |
| A3PE600 | AGLE600 | PQ208 | 2 | 4 |
| A3PE600/L | | All other packages | 6 | 0 |
| A3PE1500 | | PQ208 | 2 | 4 |
| A3PE1500 | | All other packages | 6 | 0 |
| A3PE3000/L | | PQ208 | 2 | 4 |
| A3PE3000/L | AGLE3000 | All other packages | 6 | 0 |
| **Fusion Devices** | | | | |
| AFS090 | | All | 1 | 5 |
| AFS250, M1AFS250 | | All | 1 | 5 |
| AFS600, M7AFS600, M1AFS600 | | All | 2 | 4 |
| AFS1500, M1AFS1500 | | All | 2 | 4 |

Note: nano 10 k, 15 k, and 20 k offer 6 global MUXes instead of CCCs.

This section outlines the following device information: CCC features, PLL core specifications, functional descriptions, software configuration information, detailed usage information, recommended board-level considerations, and other considerations concerning global networks in low power flash devices.

## Clock Conditioning Circuits with Integrated PLLs

Each of the CCCs with integrated PLLs includes the following:

- 1 PLL core, which consists of a phase detector, a low-pass filter, and a four-phase voltage-controlled oscillator
- 3 global multiplexer blocks that steer signals from the global pads and the PLL core onto the global networks
- 6 programmable delays and 1 fixed delay for time advance/delay adjustments
- 5 programmable frequency divider blocks to provide frequency synthesis (automatically configured by the SmartGen macro builder tool)

## Clock Conditioning Circuits without Integrated PLLs

There are two types of simplified CCCs without integrated PLLs in low power flash devices.

1. The simplified CCC with programmable delays, which is composed of the following:
   - 3 global multiplexer blocks that steer signals from the global pads and the programmable delay elements onto the global networks
   - 3 programmable delay elements to provide time delay adjustments
2. The simplified CCC (referred to as CCC-GL) without programmable delay elements, which is composed of the following:
   - A global multiplexer block that steer signals from the global pads onto the global networks

## CCC Locations

CCCs located in the middle of the east and west sides of the device access the three VersaNet global networks on each side (six total networks), while the four CCCs located in the four corners access three quadrant global networks (twelve total networks). See Figure 4-13.

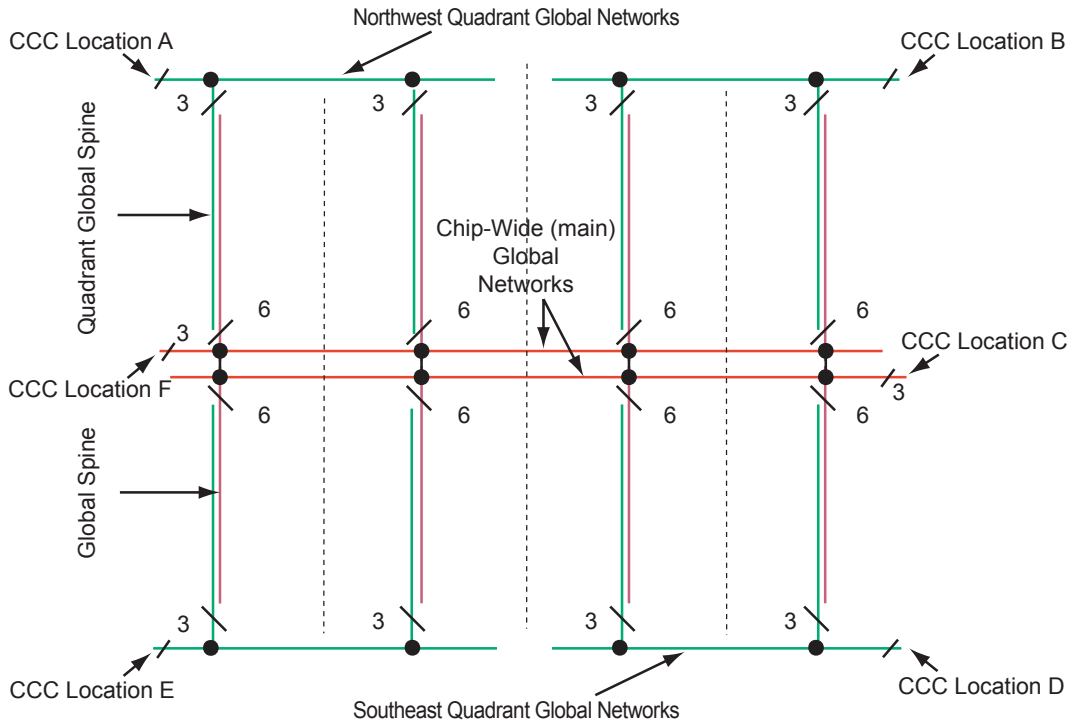


***Figure 4-13*** **• Global Network Architecture for 60 k Gate Devices and Above**

The following explains the locations of the CCCs in IGLOO and ProASIC3 devices:

In Figure 4-15 on page 82 through Figure 4-16 on page 82, CCCs with integrated PLLs are indicated in red, and simplified CCCs are indicated in yellow. There is a letter associated with each location of the CCC, in clockwise order. The upper left corner CCC is named "A," the upper right is named "B," and so on. These names finish up at the middle left with letter "F."

## IGLOO and ProASIC3 CCC Locations

In all IGLOO and ProASIC3 devices (except 10 k through 30 k gate devices, which do not contain PLLs), six CCCs are located in the same positions as the IGLOOe and ProASIC3E CCCs. Only one of the CCCs has an integrated PLL and is located in the middle of the west (middle left) side of the device. The other five CCCs are simplified CCCs and are located in the four corners and the middle of the east side of the device (Figure 4-14).

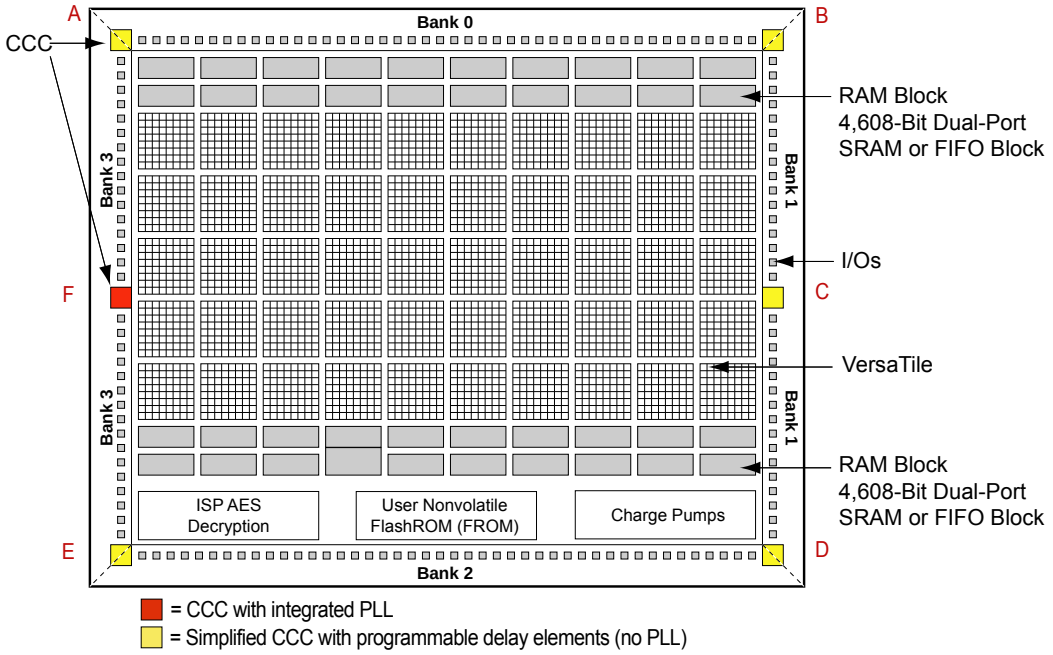


***Figure 4-14* • CCC Locations in IGLOO and ProASIC3 Family Devices (except 10 k through 30 k gate devices)**

Note: The number and architecture of the banks are different for some devices.

10 k through 30 k gate devices do not support PLL features. In these devices, there are two CCC-GLs at the lower corners (one at the lower right, and one at the lower left). These CCC-GLs do not have programmable delays.

## IGLOOe and ProASIC3E CCC Locations

IGLOOe and ProASIC3E devices have six CCCs—one in each of the four corners and one each in the middle of the east and west sides of the device (Figure 4-15).

All six CCCs are integrated with PLLs, except in PQFP-208 package devices. PQFP-208 package devices also have six CCCs, of which two include PLLs and four are simplified CCCs. The CCCs with PLLs are implemented in the middle of the east and west sides of the device (middle right and middle left). The simplified CCCs without PLLs are located in the four corners of the device (Figure 4-16).

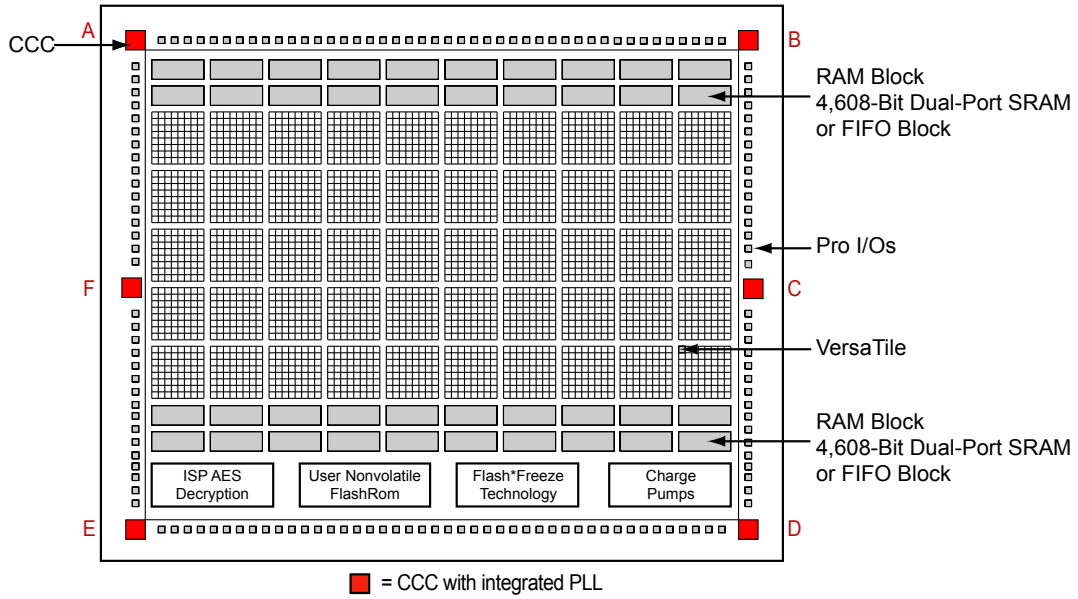


***Figure 4-15*** **• CCC Locations in IGLOOe and ProASIC3E Family Devices (except PQFP-208 package)**

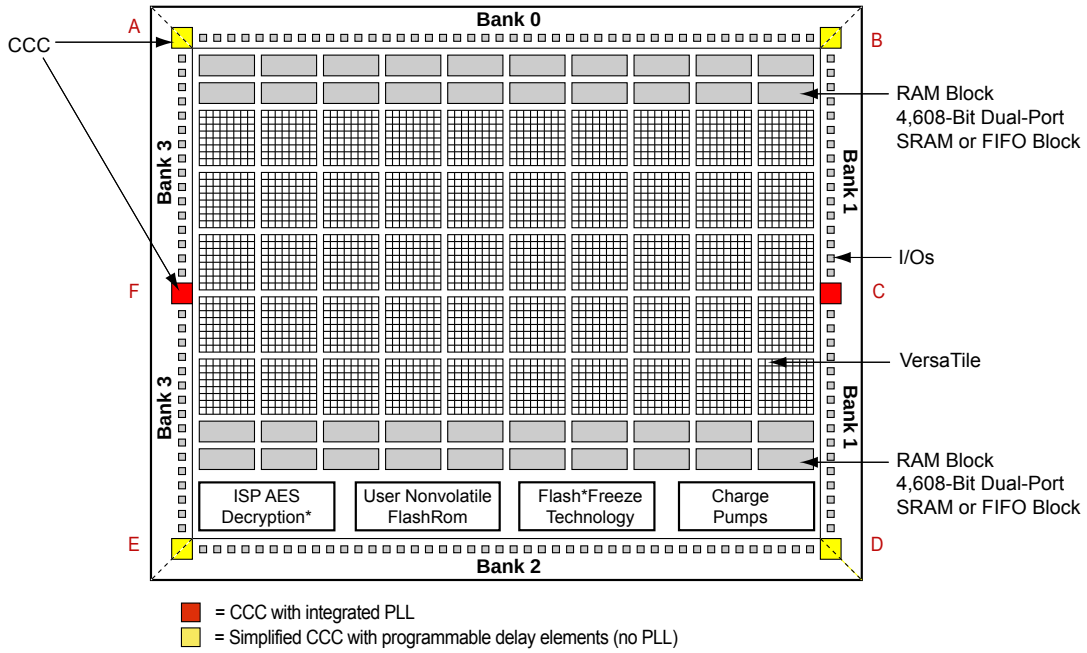


***Figure 4-16*** **• CCC Locations in ProASIC3E Family Devices (PQFP-208 package)**

## Fusion CCC Locations

Fusion devices have six CCCs: one in each of the four corners and one each in the middle of the east and west sides of the device (Figure 4-17 and Figure 4-18). The device can have one integrated PLL in the middle of the west side of the device or two integrated PLLs in the middle of the east and west sides of the device (middle right and middle left).

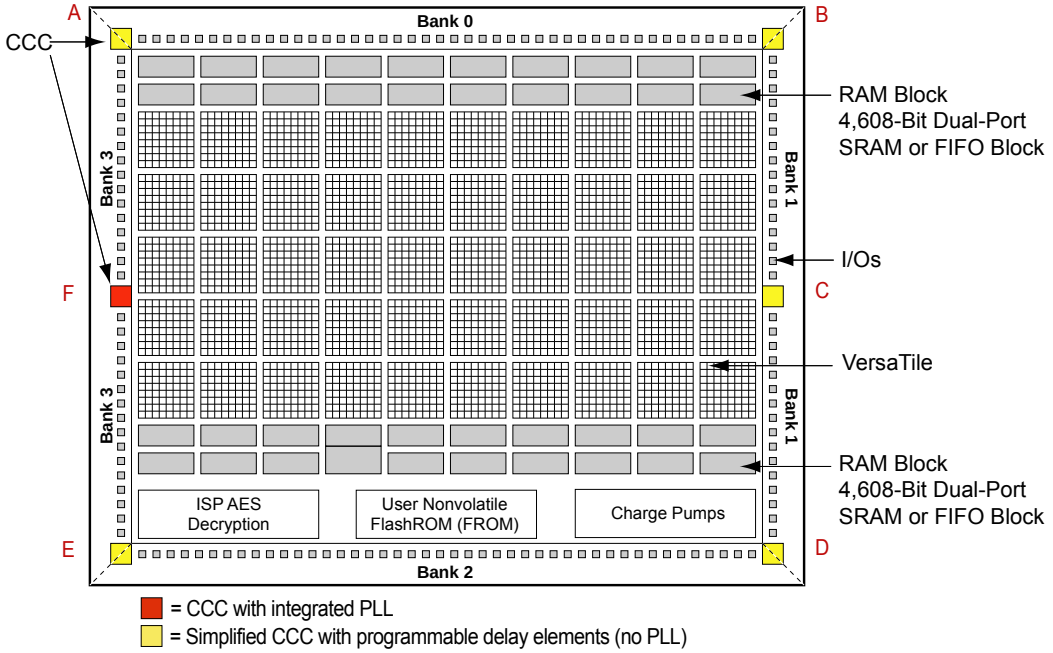


***Figure 4-17* • CCC Locations in Fusion Family Devices (AFS090, AFS250, M1AFS250)**

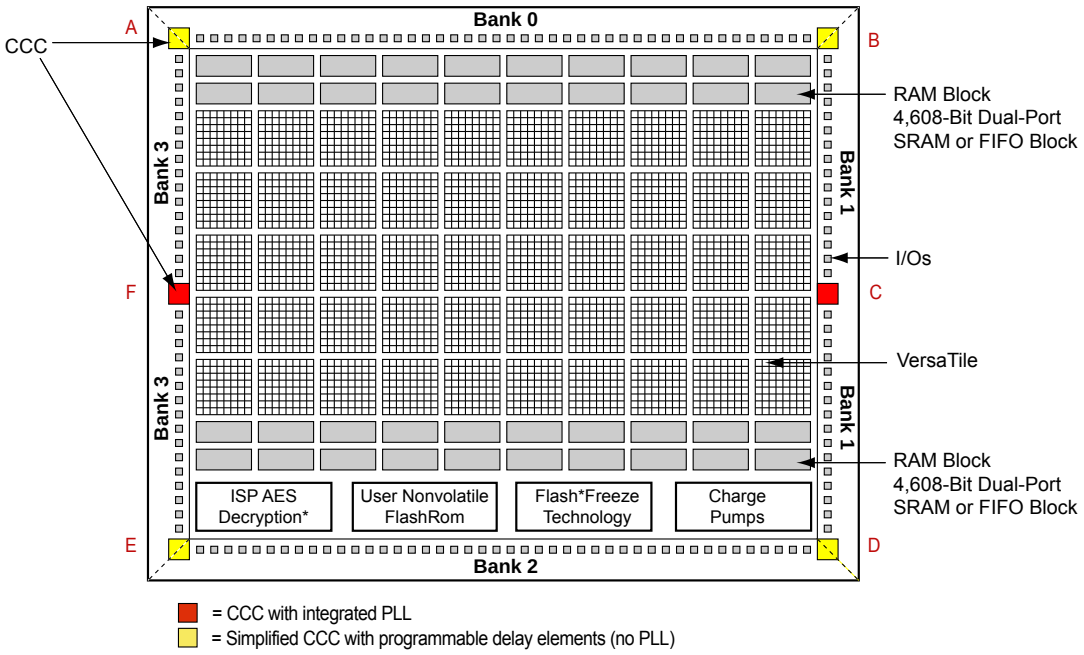


***Figure 4-18* • CCC Locations in Fusion Family Devices (except AFS090, AFS250, M1AFS250)**

# PLL Core Specifications

PLL core specifications can be found in the DC and Switching Characteristics chapter of the appropriate family datasheet.

## Loop Bandwidth

Common design practice for systems with a low-noise input clock is to have PLLs with small loop bandwidths to reduce the effects of noise sources at the output. Table 4-6 shows the PLL loop bandwidth, providing a measure of the PLL's ability to track the input clock and jitter.

***Table 4-6* • –3 dB Frequency of the PLL**

| | Minimum ($T_a$ = +125°C, VCCA = 1.4 V) | Typical ($T_a$ = +25°C, VCCA = 1.5 V) | Maximum ($T_a$ = –55°C, VCCA = 1.6 V) |
|---|---|---|---|
| **–3 dB Frequency** | 15 kHz | 25 kHz | 45 kHz |

## PLL Core Operating Principles

This section briefly describes the basic principles of PLL operation. The PLL core is composed of a phase detector (PD), a low-pass filter (LPF), and a four-phase voltage-controlled oscillator (VCO). Figure 4-19 illustrates a basic single-phase PLL core with a divider and delay in the feedback path.

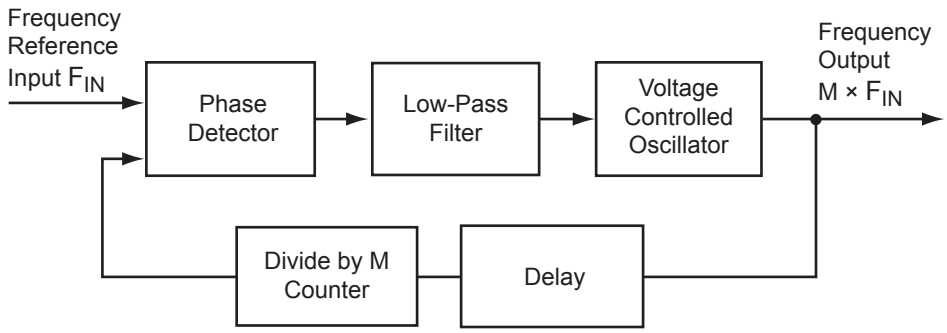


***Figure 4-19* • Simplified PLL Core with Feedback Divider and Delay**

The PLL is an electronic servo loop that phase-aligns the PD feedback signal with the reference input. To achieve this, the PLL dynamically adjusts the VCO output signal according to the average phase difference between the input and feedback signals.

The first element is the PD, which produces a voltage proportional to the phase difference between its inputs. A simple example of a digital phase detector is an Exclusive-OR gate. The second element, the LPF, extracts the average voltage from the phase detector and applies it to the VCO. This applied voltage alters the resonant frequency of the VCO, thus adjusting its output frequency.

Consider Figure 4-19 with the feedback path bypassing the divider and delay elements. If the LPF steadily applies a voltage to the VCO such that the output frequency is identical to the input frequency, this steady-state condition is known as lock. Note that the input and output phases are also identical. The PLL core sets a LOCK output signal HIGH to indicate this condition.

Should the input frequency increase slightly, the PD detects the frequency/phase difference between its reference and feedback input signals. Since the PD output is proportional to the phase difference, the change causes the output from the LPF to increase. This voltage change increases the resonant frequency of the VCO and increases the feedback frequency as a result. The PLL dynamically adjusts in this manner until the PD senses two phase-identical signals and steady-state lock is achieved. The opposite (decreasing PD output signal) occurs when the input frequency decreases.

Now suppose the feedback divider is inserted in the feedback path. As the division factor M (shown in Figure 4-20 on page 85) is increased, the average phase difference increases. The average phase

difference will cause the VCO to increase its frequency until the output signal is phase-identical to the input after undergoing division. In other words, lock in both frequency and phase is achieved when the output frequency is M times the input. Thus, clock division in the feedback path results in multiplication at the output.

A similar argument can be made when the delay element is inserted into the feedback path. To achieve steady-state lock, the VCO output signal will be delayed by the input period *less* the feedback delay. For periodic signals, this is equivalent to time-advancing the output clock by the feedback delay.

Another key parameter of a PLL system is the acquisition time. Acquisition time is the amount of time it takes for the PLL to achieve lock (i.e., phase-align the feedback signal with the input reference clock). For example, suppose there is no voltage applied to the VCO, allowing it to operate at its free-running frequency. Should an input reference clock suddenly appear, a lock would be established within the maximum acquisition time.

# Functional Description

This section provides detailed descriptions of PLL block functionality: clock dividers and multipliers, clock delay adjustment, phase adjustment, and dynamic PLL configuration.

## Clock Dividers and Multipliers

The PLL block contains five programmable dividers. Figure 4-20 shows a simplified PLL block.

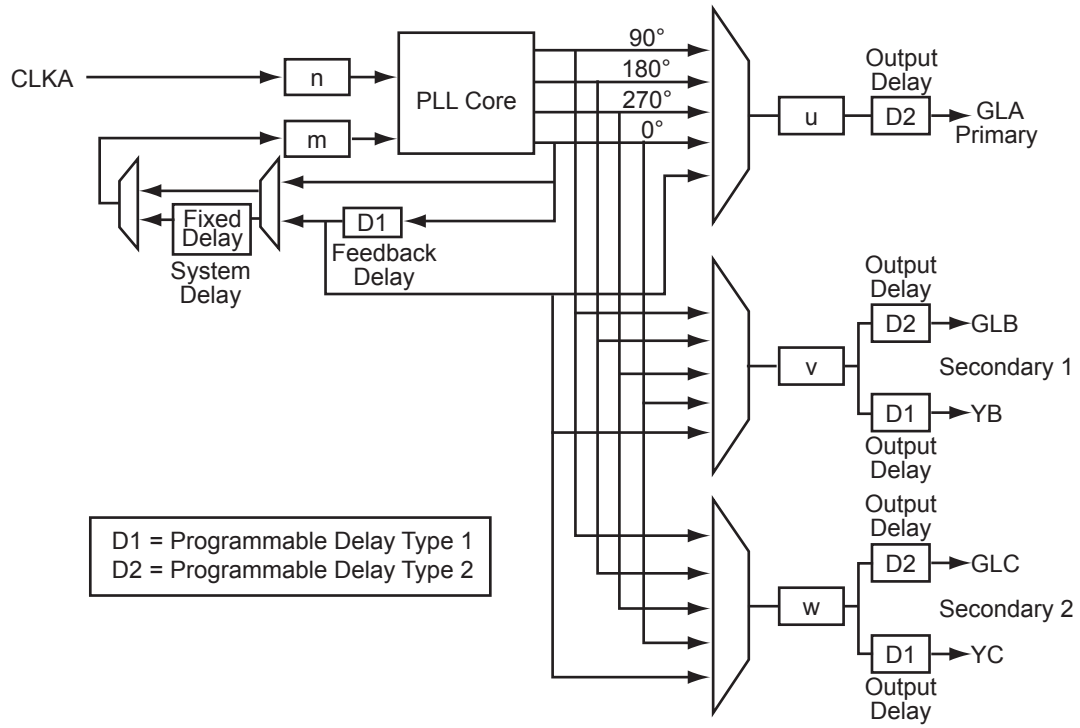


***Figure 4-20*** **• PLL Block Diagram**

Dividers *n* and *m* (the input divider and feedback divider, respectively) provide integer frequency division factors from 1 to 128. The output dividers *u*, *v*, and *w* provide integer division factors from 1 to 32. Frequency scaling of the reference clock CLKA is performed according to the following formulas:

$f_{GLA} = f_{CLKA} \times m / (n \times u)$ – GLA Primary PLL Output Clock

*EQ 4-1*

$f_{GLB} = f_{YB} = f_{CLKA} \times m / (n \times v)$ – GLB Secondary 1 PLL Output Clock(s)

*EQ 4-2*

$f_{GLC} = f_{YC} = f_{CLKA} \times m / (n \times w)$ – GLC Secondary 2 PLL Output Clock(s)

*EQ 4-3*

SmartGen provides a user-friendly method of generating the configured PLL netlist, which includes automatically setting the division factors to achieve the closest possible match to the requested frequencies. Since the five output clocks share the *n* and *m* dividers, the achievable output frequencies are interdependent and related according to the following formula:

$f_{GLA} = f_{GLB} \times (v / u) = f_{GLC} \times (w / u)$

*EQ 4-4*

## Clock Delay Adjustment

There are a total of seven configurable delay elements implemented in the PLL architecture.

Two of the delays are located in the feedback path, entitled System Delay and Feedback Delay. System Delay provides a fixed delay of 2 ns (typical), and Feedback Delay provides selectable delay values from 0.6 ns to 5.56 ns in 160 ps increments (typical). For PLLs, delays in the feedback path will effectively advance the output signal from the PLL core with respect to the reference clock. Thus, the System and Feedback delays generate negative delay on the output clock. Additionally, each of these delays can be independently bypassed if necessary.

The remaining five delays perform traditional time delay and are located at each of the outputs of the PLL. Besides the fixed global driver delay of 0.755 ns for each of the global networks, the global multiplexer outputs (GLA, GLB, and GLC) each feature an additional selectable delay value, as given in Table 4-7.

***Table 4-7* • Delay Values in Libero SoC Software per Device Family**

| Device | Typical | Starting Values | Increments | Ending Value |
|---|---|---|---|---|
| ProASIC3 | 200 ps | 0 to 735 ps | 200 ps | 6.735 ns |
| IGLOO/ProASIC3L 1.5 V | 360 ps | 0 to 1.610 ns | 360 ps | 12.410 ns |
| IGLOO/ProASIC3L 1.2 V | 580 ps | 0 to 2.880 ns | 580 ps | 20.280 ns |

The additional YB and YC signals have access to a selectable delay from 0.6 ns to 5.56 ns in 160 ps increments (typical). This is the same delay value as the CLKDLY macro. It is similar to CLKDLY, which bypasses the PLL core just to take advantage of the phase adjustment option with the delay value.

The following parameters must be taken into consideration to achieve minimum delay at the outputs (GLA, GLB, GLC, YB, and YC) relative to the reference clock: routing delays from the PLL core to CCC outputs, core outputs and global network output delays, and the feedback path delay. The feedback path delay acts as a time advance of the input clock and will offset any delays introduced beyond the PLL core output. The routing delays are determined from back-annotated simulation and are configuration-dependent.

## Phase Adjustment

The four phases available (0, 90, 180, 270) are phases with respect to VCO (PLL output). The VCO is divided to achieve the user's CCC required output frequency (GLA, YB/GLB, YC/GLC). The division happens after the selection of the VCO phase. The effective phase shift is actually the VCO phase shift divided by the output divider. This is why the visual CCC shows both the actual achievable phase and more importantly the actual delay that is equivalent to the phase shift that can be achieved.

## Dynamic PLL Configuration

The CCCs can be configured both statically and dynamically.

In addition to the ports available in the Static CCC, the Dynamic CCC has the dynamic shift register signals that enable dynamic reconfiguration of the CCC. With the Dynamic CCC, the ports CLKB and CLKC are also exposed. All three clocks (CLKA, CLKB, and CLKC) can be configured independently.

The CCC block is fully configurable. The following two sources can act as the CCC configuration bits.

### *Flash Configuration Bits*

The flash configuration bits are the configuration bits associated with programmed flash switches. These bits are used when the CCC is in static configuration mode. Once the device is programmed, these bits cannot be modified. They provide the default operating state of the CCC.

### *Dynamic Shift Register Outputs*

This source does not require core reprogramming and allows core-driven dynamic CCC reconfiguration. When the dynamic register drives the configuration bits, the user-defined core circuit takes full control over SDIN, SDOUT, SCLK, SSHIFT, and SUPDATE. The configuration bits can consequently be dynamically changed through shift and update operations in the serial register interface. Access to the logic core is accomplished via the dynamic bits in the specific tiles assigned to the PLLs.

Figure 4-21 illustrates a simplified block diagram of the MUX architecture in the CCCs.

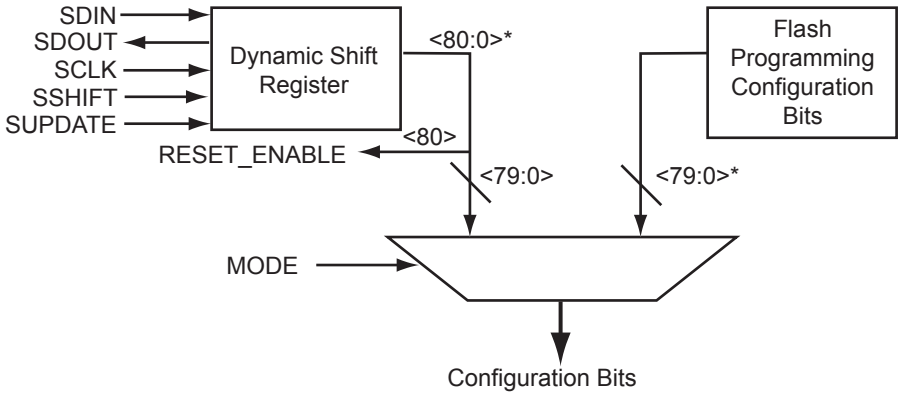


*Note: *For Fusion, bit <88:81> is also needed.*

***Figure 4-21* • The CCC Configuration MUX Architecture**

The selection between the flash configuration bits and the bits from the configuration register is made using the MODE signal shown in Figure 4-21. If the MODE signal is logic HIGH, the dynamic shift register configuration bits are selected. There are 81 control bits to configure the different functions of the CCC.

Each group of control bits is assigned a specific location in the configuration shift register. For a list of the 81 configuration bits (C[80:0]) in the CCC and a description of each, refer to "PLL Configuration Bits Description" on page 90. The configuration register can be serially loaded with the new configuration data and programmed into the CCC using the following ports:

- SDIN: The configuration bits are serially loaded into a shift register through this port. The LSB of the configuration data bits should be loaded first.
- SDOUT: The shift register contents can be shifted out (LSB first) through this port using the shift operation.
- SCLK: This port should be driven by the shift clock.
- SSHIFT: The active-high shift enable signal should drive this port. The configuration data will be shifted into the shift register if this signal is HIGH. Once SSHIFT goes LOW, the data shifting will be halted.
- SUPDATE: The SUPDATE signal is used to configure the CCC with the new configuration bits when shifting is complete.

To access the configuration ports of the shift register (SDIN, SDOUT, SSHIFT, etc.), the user should instantiate the CCC macro in his design with appropriate ports. Microsemi recommends that users choose SmartGen to generate the CCC macros with the required ports for dynamic reconfiguration.

Users must familiarize themselves with the architecture of the CCC core and its input, output, and configuration ports to implement the desired delay and output frequency in the CCC structure. Figure 4-22 shows a model of the CCC with configurable blocks and switches.

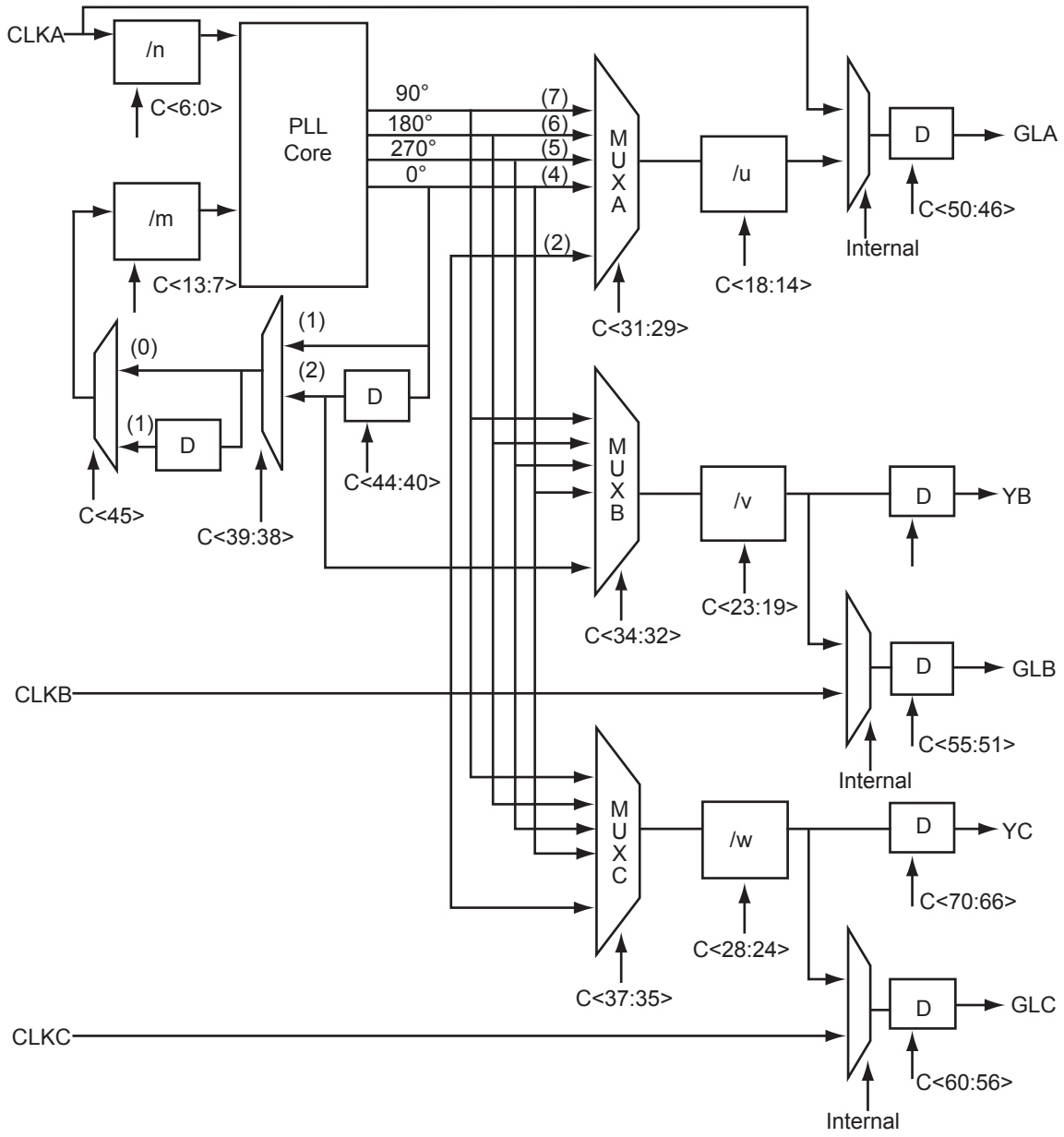


***Figure 4-22*** **• CCC Block Control Bits – Graphical Representation of Assignments**

### Loading the Configuration Register

The most important part of CCC dynamic configuration is to load the shift register properly with the configuration bits. There are different ways to access and load the configuration shift register:

- JTAG interface
- Logic core
- Specific I/O tiles

#### JTAG Interface

The JTAG interface requires no additional I/O pins. The JTAG TAP controller is used to control the loading of the CCC configuration shift register.

Low power flash devices provide a user interface macro between the JTAG pins and the device core logic. This macro is called UJTAG. A user should instantiate the UJTAG macro in his design to access the configuration register ports via the JTAG pins.

For more information on CCC dynamic reconfiguration using UJTAG, refer to the "UJTAG Applications in Microsemi's Low Power Flash Devices" section on page 297.

#### Logic Core

If the logic core is employed, the user must design a module to provide the configuration data and control the shifting and updating of the CCC configuration shift register. In effect, this is a user-designed TAP controller, which requires additional chip resources.

#### Specific I/O Tiles

If specific I/O tiles are used for configuration, the user must provide the external equivalent of a TAP controller. This does not require additional core resources but does use pins.

### Shifting the Configuration Data

To enter a new configuration, all 81 bits must shift in via SDIN. After all bits are shifted, SSHIFT must go LOW and SUPDATE HIGH to enable the new configuration. For simulation purposes, bits <71:73> and <77:80> are "don't care."

The SUPDATE signal must be LOW during any clock cycle where SSHIFT is active. After SUPDATE is asserted, it must go back to the LOW state until a new update is required.

## PLL Configuration Bits Description

***Table 4-8* • Configuration Bit Descriptions for the CCC Blocks**

| Config. Bits | Signal | Name | Description |
|---|---|---|---|
| <88:87> | GLMUXCFG [1:0][1] | NGMUX configuration | The configuration bits specify the input clocks to the NGMUX (refer to Table 4-17 on page 94).[2] |
| 86 | OCDIVHALF[1] | Division by half | When the PLL is bypassed, the 100 MHz RC oscillator can be divided by the divider factor in Table 4-18 on page 95. |
| 85 | OBDIVHALF[1] | Division by half | When the PLL is bypassed, the 100 MHz RC oscillator can be divided by a 0.5 factor (refer to Table 4-18 on page 95). |
| 84 | OADIVHALF[1] | Division by half | When the PLL is bypassed, the 100 MHz RC oscillator can be divided by certain 0.5 factor (refer to Table 4-16 on page 94). |

*Notes:*

1. *The <88:81> configuration bits are only for the Fusion dynamic CCC.*
2. *This value depends on the input clock source, so Layout must complete before these bits can be set. After completing Layout in Designer, generate the "CCC_Configuration" report by choosing **Tools** > **Report** > **CCC_Configuration**. The report contains the appropriate settings for these bits.*

***Table 4-8* • Configuration Bit Descriptions for the CCC Blocks (continued)**

| Config. Bits | Signal | Name | Description |
|---|---|---|---|
| 83 | RXCSEL[1] | CLKC input selection | Select the CLKC input clock source between RC oscillator and crystal oscillator (refer to Table 4-16 on page 94).[2] |
| 82 | RXBSEL[1] | CLKB input selection | Select the CLKB input clock source between RC oscillator and crystal oscillator (refer to Table 4-16 on page 94).[2] |
| 81 | RXASEL[1] | CLKA input selection | Select the CLKA input clock source between RC oscillator and crystal oscillator (refer to Table 4-16 on page 94).[2] |
| 80 | RESETEN | Reset Enable | Enables (active high) the synchronization of PLL output dividers after dynamic reconfiguration (SUPDATE). The Reset Enable signal is READ-ONLY. |
| 79 | DYNCSEL | Clock Input C Dynamic Select | Configures clock input C to be sent to GLC for dynamic control.[2] |
| 78 | DYNBSEL | Clock Input B Dynamic Select | Configures clock input B to be sent to GLB for dynamic control.[2] |
| 77 | DYNASEL | Clock Input A Dynamic Select | Configures clock input A for dynamic PLL configuration.[2] |
| <76:74> | VCOSEL[2:0] | VCO Gear Control | Three-bit VCO Gear Control for four frequency ranges (refer to Table 4-19 on page 95 and Table 4-20 on page 95). |
| 73 | STATCSEL | MUX Select on Input C | MUX selection for clock input C[2] |
| 72 | STATBSEL | MUX Select on Input B | MUX selection for clock input B[2] |
| 71 | STATASEL | MUX Select on Input A | MUX selection for clock input A[2] |
| <70:66> | DLYC[4:0] | YC Output Delay | Sets the output delay value for YC. |
| <65:61> | DLYB[4:0] | YB Output Delay | Sets the output delay value for YB. |
| <60:56> | DLYGLC[4:0] | GLC Output Delay | Sets the output delay value for GLC. |
| <55:51> | DLYGLB[4:0] | GLB Output Delay | Sets the output delay value for GLB. |
| <50:46> | DLYGLA[4:0] | Primary Output Delay | Primary GLA output delay |
| 45 | XDLYSEL | System Delay Select | When selected, inserts System Delay in the feedback path in Figure 4-20 on page 85. |
| <44:40> | FBDLY[4:0] | Feedback Delay | Sets the feedback delay value for the feedback element in Figure 4-20 on page 85. |
| <39:38> | FBSEL[1:0] | Primary Feedback Delay Select | Controls the feedback MUX: no delay, include programmable delay element, or use external feedback. |
| <37:35> | OCMUX[2:0] | Secondary 2 Output Select | Selects from the VCO's four phase outputs for GLC/YC. |
| <34:32> | OBMUX[2:0] | Secondary 1 Output Select | Selects from the VCO's four phase outputs for GLB/YB. |

*Notes:*

1. *The <88:81> configuration bits are only for the Fusion dynamic CCC.*
2. *This value depends on the input clock source, so Layout must complete before these bits can be set. After completing Layout in Designer, generate the "CCC_Configuration" report by choosing **Tools** > **Report** > **CCC_Configuration**. The report contains the appropriate settings for these bits.*

***Table 4-8* • Configuration Bit Descriptions for the CCC Blocks (continued)**

| Config. Bits | Signal | Name | Description |
|---|---|---|---|
| <31:29> | OAMUX[2:0] | GLA Output Select | Selects from the VCO's four phase outputs for GLA. |
| <28:24> | OCDIV[4:0] | Secondary 2 Output Divider | Sets the divider value for the GLC/YC outputs. Also known as divider *w* in Figure 4-20 on page 85. The divider value will be OCDIV[4:0] + 1. |
| <23:19> | OBDIV[4:0] | Secondary 1 Output Divider | Sets the divider value for the GLB/YB outputs. Also known as divider *v* in Figure 4-20 on page 85. The divider value will be OBDIV[4:0] + 1. |
| <18:14> | OADIV[4:0] | Primary Output Divider | Sets the divider value for the GLA output. Also known as divider *u* in Figure 4-20 on page 85. The divider value will be OADIV[4:0] + 1. |
| <13:7> | FBDIV[6:0] | Feedback Divider | Sets the divider value for the PLL core feedback. Also known as divider *m* in Figure 4-20 on page 85. The divider value will be FBDIV[6:0] + 1. |
| <6:0> | FINDIV[6:0] | Input Divider | Input Clock Divider (/n). Sets the divider value for the input delay on CLKA. The divider value will be FINDIV[6:0] + 1. |

*Notes:*

1. *The <88:81> configuration bits are only for the Fusion dynamic CCC.*
2. *This value depends on the input clock source, so Layout must complete before these bits can be set. After completing Layout in Designer, generate the "CCC_Configuration" report by choosing **Tools** > **Report** > **CCC_Configuration**. The report contains the appropriate settings for these bits.*

Table 4-9 to Table 4-15 on page 94 provide descriptions of the configuration data for the configuration bits.

***Table 4-9* • Input Clock Divider, FINDIV[6:0] (/n)**

| FINDIV<6:0> State | Divisor | New Frequency Factor |
|---|---|---|
| 0 | 1 | 1.00000 |
| 1 | 2 | 0.50000 |
| ⋮ | ⋮ | ⋮ |
| 127 | 128 | 0.0078125 |

***Table 4-10* • Feedback Clock Divider, FBDIV[6:0] (/m)**

| FBDIV<6:0> State | Divisor | New Frequency Factor |
|---|---|---|
| 0 | 1 | 1 |
| 1 | 2 | 2 |
| ⋮ | ⋮ | ⋮ |
| 127 | 128 | 128 |

***Table 4-11* • Output Frequency Dividers**
***A* Output Divider, OADIV <4:0> (/u);**
***B* Output Divider, OBDIV <4:0> (/v);**
***C* Output Divider, OCDIV <4:0> (/w)**

| OADIV<4:0>; OBDIV<4:0>; CDIV<4:0> State | Divisor | New Frequency Factor |
|---|---|---|
| 0 | 1 | 1.00000 |
| 1 | 2 | 0.50000 |
| ⋮ | ⋮ | ⋮ |
| 31 | 32 | 0.03125 |

***Table 4-12* • MUXA, MUXB, MUXC**

| OAMUX<2:0>; OBMUX<2:0>; OCMUX<2:0> State | MUX Input Selected |
|---|---|
| 0 | None. Six-input MUX and PLL are bypassed.<br>Clock passes only through global MUX and goes directly into HC ribs. |
| 1 | Not available |
| 2 | PLL feedback delay line output |
| 3 | Not used |
| 4 | PLL VCO 0° phase shift |
| 5 | PLL VCO 270° phase shift |
| 6 | PLL VCO 180° phase shift |
| 7 | PLL VCO 90° phase shift |

***Table 4-13* • 2-Bit Feedback MUX**

| FBSEL<1:0> State | MUX Input Selected |
|---|---|
| 0 | Ground. Used for power-down mode in power-down logic block. |
| 1 | PLL VCO 0° phase shift |
| 2 | PLL delayed VCO 0° phase shift |
| 3 | N/A |

***Table 4-14* • Programmable Delay Selection for Feedback Delay and Secondary Core Output Delays**

| FBDLY<4:0>; DLYYB<4:0>; DLYYC<4:0> State | Delay Value |
|---|---|
| 0 | Typical delay = 600 ps |
| 1 | Typical delay = 760 ps |
| 2 | Typical delay = 920 ps |
| ⋮ | ⋮ |
| 31 | Typical delay = 5.56 ns |

***Table 4-15* • Programmable Delay Selection for Global Clock Output Delays**

| DLYGLA<4:0>; DLYGLB<4:0>; DLYGLC<4:0> State | Delay Value |
|---|---|
| 0 | Typical delay = 225 ps |
| 1 | Typical delay = 760 ps |
| 2 | Typical delay = 920 ps |
| ⋮ | ⋮ |
| 31 | Typical delay = 5.56 ns |

***Table 4-16* • Fusion Dynamic CCC Clock Source Selection**

| RXASEL | DYNASEL | Source of CLKA |
|---|---|---|
| 1 | 0 | RC Oscillator |
| 1 | 1 | Crystal Oscillator |
| **RXBSEL** | **DYNBSEL** | **Source of CLKB** |
| 1 | 0 | RC Oscillator |
| 1 | 1 | Crystal Oscillator |
| **RXBSEL** | **DYNCSEL** | **Source of CLKC** |
| 1 | 0 | RC Oscillator |
| 1 | 1 | Crystal Oscillator |

***Table 4-17* • Fusion Dynamic CCC NGMUX Configuration**

| GLMUXCFG<1:0> | NGMUX Select Signal | Supported Input Clocks to NGMUX |
|---|---|---|
| 00 | 0 | GLA |
| | 1 | GLC |
| 01 | 0 | GLA |
| | 1 | GLINT |
| 10 | 0 | GLC |
| | 1 | GLINT |

***Table 4-18*** **• Fusion Dynamic CCC Division by Half Configuration**

| OADIVHALF / OBDIVHALF / OCDIVHALF | OADIV<4:0> / OBDIV<4:0> / OCDIV<4:0> (in decimal) | Divider Factor | Input Clock Frequency | Output Clock Frequency (MHz) |
|---|---|---|---|---|
| 1 | 2 | 1.5 | 100 MHz RC Oscillator | 66.7 |
| | 4 | 2.5 | | 40.0 |
| | 6 | 3.5 | | 28.6 |
| | 8 | 4.5 | | 22.2 |
| | 10 | 5.5 | | 18.2 |
| | 12 | 6.5 | | 15.4 |
| | 14 | 7.5 | | 13.3 |
| | 16 | 8.5 | | 11.8 |
| | 18 | 9.5 | | 10.5 |
| | 20 | 10.5 | | 9.5 |
| | 22 | 11.5 | | 8.7 |
| | 24 | 12.5 | | 8.0 |
| | 26 | 13.5 | | 7.4 |
| | 28 | 14.5 | | 6.9 |
| 0 | 0–31 | 1–32 | Other Clock Sources | Depends on other divider settings |

***Table 4-19*** **• Configuration Bit <76:75> / VCOSEL<2:1> Selection for All Families**

| | VCOSEL[2:1] | | | | | | | |
|---|---|---|---|---|---|---|---|---|
| | 00 | | 01 | | 10 | | 11 | |
| Voltage | Min. (MHz) | Max. (MHz) | Min. (MHz) | Max. (MHz) | Min. (MHz) | Max. (MHz) | Min. (MHz) | Max. (MHz) |
| **IGLOO and IGLOO PLUS** | | | | | | | | |
| 1.2 V ± 5% | 24 | 35 | 30 | 70 | 60 | 140 | 135 | 160 |
| 1.5 V ± 5% | 24 | 43.75 | 30 | 87.5 | 60 | 175 | 135 | 250 |
| **ProASIC3L, RT ProASIC3, and Military ProASIC3/L** | | | | | | | | |
| 1.2 V ± 5% | 24 | 35 | 30 | 70 | 60 | 140 | 135 | 250 |
| 1.5 V ± 5% | 24 | 43.75 | 30 | 70 | 60 | 175 | 135 | 350 |
| **ProASIC3 and Fusion** | | | | | | | | |
| 1.5 V ± 5% | 24 | 43.75 | 33.75 | 87.5 | 67.5 | 175 | 135 | 350 |

***Table 4-20*** **• Configuration Bit <74> / VCOSEL<0> Selection for All Families**

| VCOSEL[0] | Description |
|---|---|
| 0 | Fast PLL lock acquisition time with high tracking jitter. Refer to the corresponding datasheet for specific value and definition. |
| 1 | Slow PLL lock acquisition time with low tracking jitter. Refer to the corresponding datasheet for specific value and definition. |

# Software Configuration

SmartGen automatically generates the desired CCC functional block by configuring the control bits, and allows the user to select two CCC modes: Static PLL and Delayed Clock (CLKDLY).

## Static PLL Configuration

The newly implemented Visual PLL Configuration Wizard feature provides the user a quick and easy way to configure the PLL with the desired settings (Figure 4-23). The user can invoke SmartGen to set the parameters and generate the netlist file with the appropriate flash configuration bits set for the CCCs. As mentioned in "PLL Macro Block Diagram" on page 69, the input reference clock CLKA can be configured to be driven by Hardwired I/O, External I/O, or Core Logic. The user enters the desired settings for all the parameters (output frequency, output selection, output phase adjustment, clock delay, feedback delay, and system delay). Notice that the actual values (divider values, output frequency, delay values, and phase) are shown to aid the user in reaching the desired design frequency in real time. These values are typical-case data. Best- and worst-case data can be observed through static timing analysis in SmartTime within Designer.

For dynamic configuration, the CCC parameters are defined using either the external JTAG port or an internally defined serial interface via the built-in dynamic shift register. This feature provides the ability to compensate for changes in the external environment.

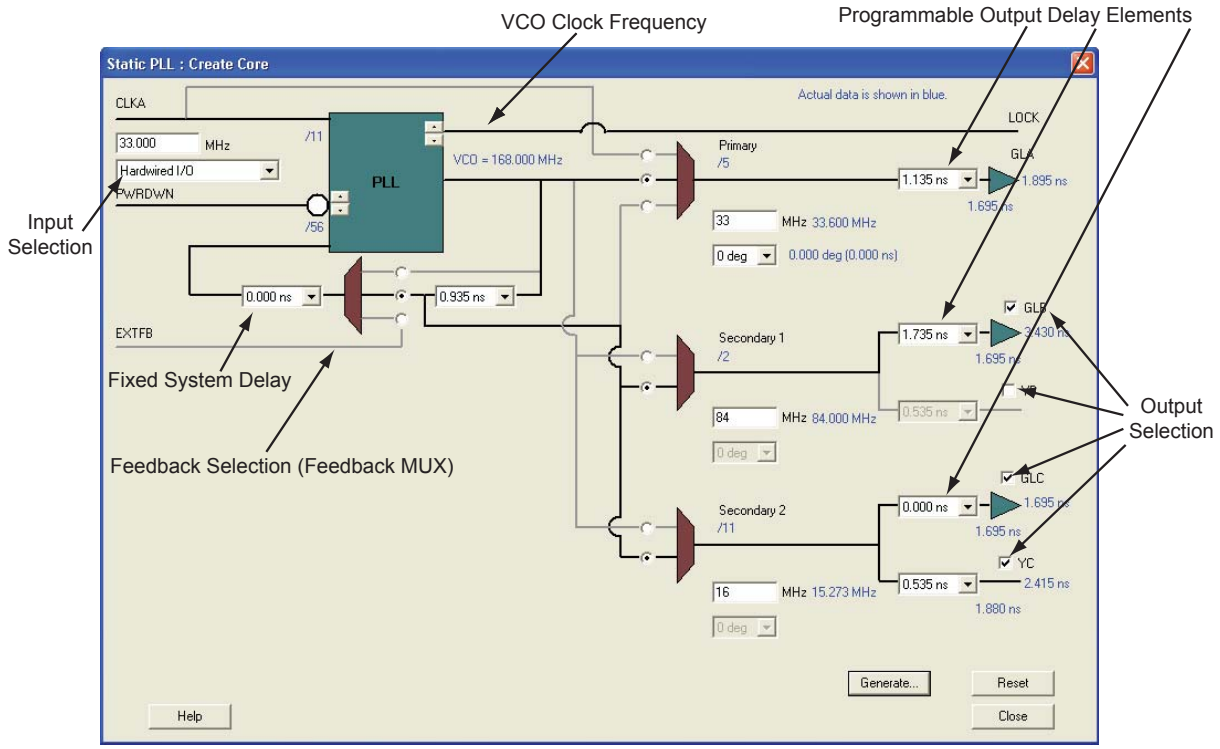


***Figure 4-23*** **• Visual PLL Configuration Wizard**

## Feedback Configuration

The PLL provides both internal and external feedback delays. Depending on the configuration, various combinations of feedback delays can be achieved.

### Internal Feedback Configuration

This configuration essentially sets the feedback multiplexer to route the VCO output of the PLL core as the input to the feedback of the PLL. The feedback signal can be processed with the fixed system and the adjustable feedback delay, as shown in Figure 4-24. The dividers are automatically configured by SmartGen based on the user input.

Indicated below is the System Delay pull-down menu. The System Delay can be bypassed by setting it to 0. When set, it adds a 2 ns delay to the feedback path (which results in delay advancement of the output clock by 2 ns).

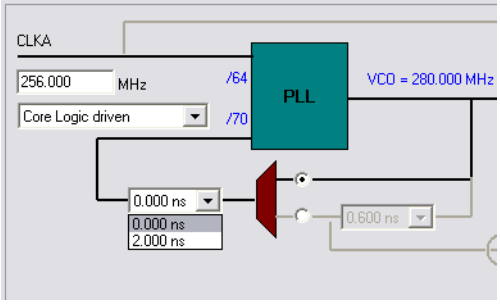


***Figure 4-24*** **• Internal Feedback with Selectable System Delay**

Figure 4-25 shows the controllable Feedback Delay. If set properly in conjunction with the fixed System Delay, the total output delay can be advanced significantly.

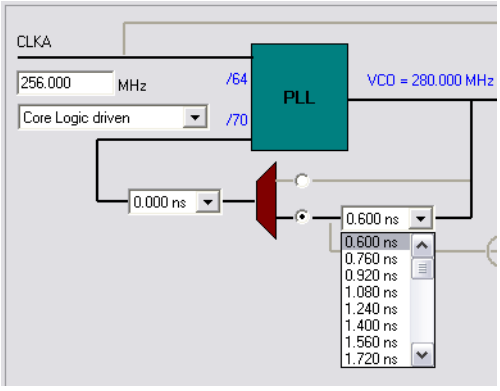


***Figure 4-25*** **• Internal Feedback with Selectable Feedback Delay**

### External Feedback Configuration

For certain applications, such as those requiring generation of PCB clocks that must be matched with existing board delays, it is useful to implement an external feedback, EXTFB. The Phase Detector of the PLL core will receive CLKA and EXTFB as inputs. EXTFB may be processed by the fixed System Delay element as well as the *M* divider element. The EXTFB option is currently not supported.

After setting all the required parameters, users can generate one or more PLL configurations with HDL or EDIF descriptions by clicking the **Generate** button. SmartGen gives the option of saving session results and messages in a log file:

```
****************
Macro Parameters
****************

Name                            : test_pll
Family                          : ProASIC3E
Output Format                   : VHDL
Type                            : Static PLL
Input Freq(MHz)                 : 10.000
CLKA Source                     : Hardwired I/O
Feedback Delay Value Index      : 1
Feedback Mux Select             : 2
XDLY Mux Select                 : No
Primary Freq(MHz)               : 33.000
Primary PhaseShift              : 0
Primary Delay Value Index       : 1
Primary Mux Select              : 4
Secondary1 Freq(MHz)            : 66.000
Use GLB                         : YES
Use YB                          : YES
GLB Delay Value Index           : 1
YB Delay Value Index            : 1
Secondary1 PhaseShift           : 0
Secondary1 Mux Select           : 4
Secondary2 Freq(MHz)            : 101.000
Use GLC                         : YES
Use YC                          : NO
GLC Delay Value Index           : 1
YC Delay Value Index            : 1
Secondary2 PhaseShift           : 0
Secondary2 Mux Select           : 4

…
…
…

Primary Clock frequency 33.333
Primary Clock Phase Shift 0.000
Primary Clock Output Delay from CLKA 0.180

Secondary1 Clock frequency 66.667
Secondary1 Clock Phase Shift 0.000
Secondary1 Clock Global Output Delay from CLKA 0.180
Secondary1 Clock Core Output Delay from CLKA 0.625

Secondary2 Clock frequency 100.000
Secondary2 Clock Phase Shift 0.000
Secondary2 Clock Global Output Delay from CLKA 0.180
```

Below is an example Verilog HDL description of a legal PLL core configuration generated by SmartGen:

```
module test_pll(POWERDOWN,CLKA,LOCK,GLA);
input POWERDOWN, CLKA;
output  LOCK, GLA;
```

```
    wire VCC, GND;

    VCC VCC_1_net(.Y(VCC));
    GND GND_1_net(.Y(GND));
    PLL Core(.CLKA(CLKA), .EXTFB(GND), .POWERDOWN(POWERDOWN),
        .GLA(GLA), .LOCK(LOCK), .GLB(), .YB(), .GLC(), .YC(),
        .OADIV0(GND), .OADIV1(GND), .OADIV2(GND), .OADIV3(GND),
        .OADIV4(GND), .OAMUX0(GND), .OAMUX1(GND), .OAMUX2(VCC),
        .DLYGLA0(GND), .DLYGLA1(GND), .DLYGLA2(GND), .DLYGLA3(GND)
        , .DLYGLA4(GND), .OBDIV0(GND), .OBDIV1(GND), .OBDIV2(GND),
        .OBDIV3(GND), .OBDIV4(GND), .OBMUX0(GND), .OBMUX1(GND),
        .OBMUX2(GND), .DLYYB0(GND), .DLYYB1(GND), .DLYYB2(GND),
        .DLYYB3(GND), .DLYYB4(GND), .DLYGLB0(GND), .DLYGLB1(GND),
        .DLYGLB2(GND), .DLYGLB3(GND), .DLYGLB4(GND), .OCDIV0(GND),
        .OCDIV1(GND), .OCDIV2(GND), .OCDIV3(GND), .OCDIV4(GND),
        .OCMUX0(GND), .OCMUX1(GND), .OCMUX2(GND), .DLYYC0(GND),
        .DLYYC1(GND), .DLYYC2(GND), .DLYYC3(GND), .DLYYC4(GND),
        .DLYGLC0(GND), .DLYGLC1(GND), .DLYGLC2(GND), .DLYGLC3(GND)
        , .DLYGLC4(GND), .FINDIV0(VCC), .FINDIV1(GND), .FINDIV2(
        VCC), .FINDIV3(GND), .FINDIV4(GND), .FINDIV5(GND),
        .FINDIV6(GND), .FBDIV0(VCC), .FBDIV1(GND), .FBDIV2(VCC),
        .FBDIV3(GND), .FBDIV4(GND), .FBDIV5(GND), .FBDIV6(GND),
        .FBDLY0(GND), .FBDLY1(GND), .FBDLY2(GND), .FBDLY3(GND),
        .FBDLY4(GND), .FBSEL0(VCC), .FBSEL1(GND), .XDLYSEL(GND),
        .VCOSEL0(GND), .VCOSEL1(GND), .VCOSEL2(GND));
    defparam Core.VCOFREQUENCY = 33.000;
endmodule
```

The "PLL Configuration Bits Description" section on page 90 provides descriptions of the PLL configuration bits for completeness. The configuration bits are shown as busses only for purposes of illustration. They will actually be broken up into individual pins in compilation libraries and all simulation models. For example, the FBSEL[1:0] bus will actually appear as pins FBSEL1 and FBSEL0. The setting of these select lines for the static PLL configuration is performed by the software and is completely transparent to the user.

## Dynamic PLL Configuration

To generate a dynamically reconfigurable CCC, the user should select **Dynamic CCC** in the configuration section of the SmartGen GUI (Figure 4-26). This will generate both the CCC core and the configuration shift register / control bit MUX.

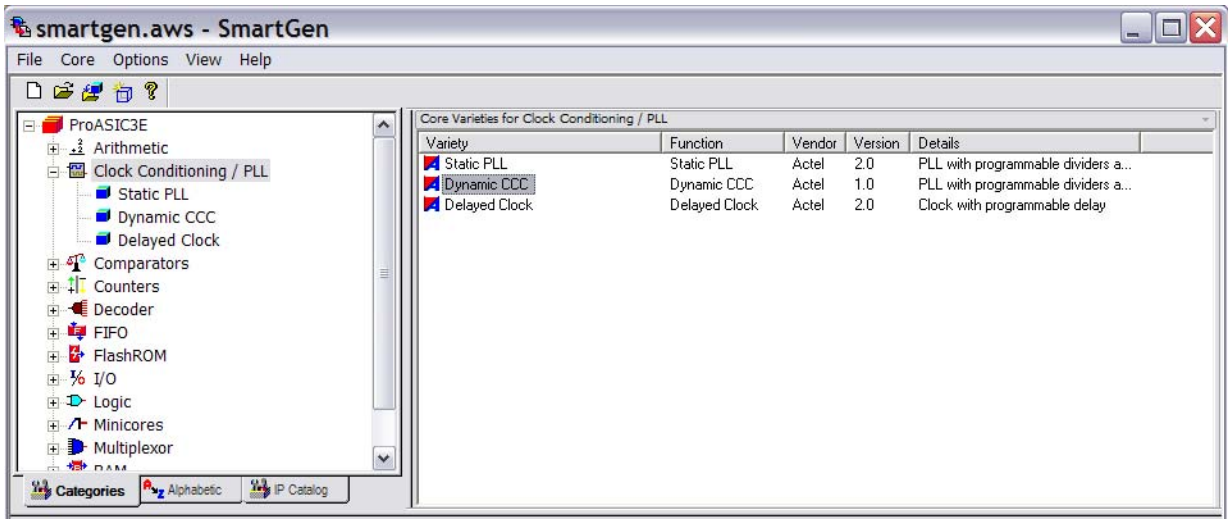


***Figure 4-26*** **• SmartGen GUI**

Even if dynamic configuration is selected in SmartGen, the user must still specify the static configuration data for the CCC (Figure 4-27). The specified static configuration is used whenever the MODE signal is set to LOW and the CCC is required to function in the static mode. The static configuration data can be used as the default behavior of the CCC where required.

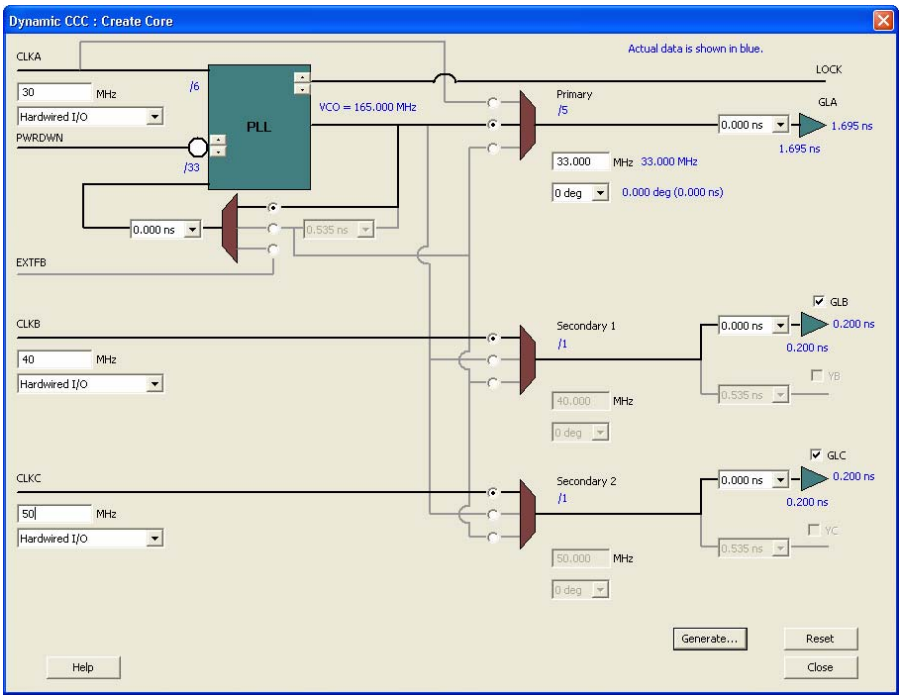


***Figure 4-27*** **• Dynamic CCC Configuration in SmartGen**

When SmartGen is used to define the configuration that will be shifted in via the serial interface, SmartGen prints out the values of the 81 configuration bits. For ease of use, several configuration bits are automatically inferred by SmartGen when the dynamic PLL core is generated; however, <71:73> (STATASEL, STATBSEL, STATCSEL) and <77:79> (DYNASEL, DYNBSEL, DYNCSEL) depend on the input clock source of the corresponding CCC. Users must first run Layout in Designer to determine the exact setting for these ports. After Layout is complete, generate the "CCC_Configuration" report by choosing **Tools** > **Reports** > **CCC_Configuration** in the Designer software. Refer to "PLL Configuration Bits Description" on page 90 for descriptions of the PLL configuration bits. For simulation purposes, bits <71:73> and <78:80> are "don't care." Therefore, it is strongly suggested that SmartGen be used to generate the correct configuration bit settings for the dynamic PLL core.

After setting all the required parameters, users can generate one or more PLL configurations with HDL or EDIF descriptions by clicking the **Generate** button. SmartGen gives the option of saving session results and messages in a log file:

```
****************
Macro Parameters
****************

Name                            : dyn_pll_hardio
Family                          : ProASIC3E
Output Format                   : VERILOG
Type                            : Dynamic CCC
Input Freq(MHz)                 : 30.000
CLKA Source                     : Hardwired I/O
Feedback Delay Value Index      : 1
Feedback Mux Select             : 1
XDLY Mux Select                 : No
Primary Freq(MHz)               : 33.000
Primary PhaseShift              : 0
Primary Delay Value Index       : 1
Primary Mux Select              : 4
Secondary1 Freq(MHz)            : 40.000
Use GLB                         : YES
Use YB                          : NO
GLB Delay Value Index           : 1
YB Delay Value Index            : 1
Secondary1 PhaseShift           : 0
Secondary1 Mux Select           : 0
Secondary1 Input Freq(MHz)      : 40.000
CLKB Source                     : Hardwired I/O
Secondary2 Freq(MHz)            : 50.000
Use GLC                         : YES
Use YC                          : NO
GLC Delay Value Index           : 1
YC Delay Value Index            : 1
Secondary2 PhaseShift           : 0
Secondary2 Mux Select           : 0
Secondary2 Input Freq(MHz)      : 50.000
CLKC Source                     : Hardwired I/O

Configuration Bits:
FINDIV[6:0]     0000101
FBDIV[6:0]      0100000
OADIV[4:0]      00100
OBDIV[4:0]      00000
OCDIV[4:0]      00000
OAMUX[2:0]      100
OBMUX[2:0]      000
OCMUX[2:0]      000
FBSEL[1:0]      01
FBDLY[4:0]      00000
XDLYSEL         0
DLYGLA[4:0]     00000
DLYGLB[4:0]     00000
```

```
DLYGLC[4:0]     00000
DLYYB[4:0]      00000
DLYYC[4:0]      00000
VCOSEL[2:0]     100

Primary Clock Frequency 33.000
Primary Clock Phase Shift 0.000
Primary Clock Output Delay from CLKA 1.695

Secondary1 Clock Frequency 40.000
Secondary1 Clock Phase Shift 0.000
Secondary1 Clock Global Output Delay from CLKB 0.200

Secondary2 Clock Frequency 50.000
Secondary2 Clock Phase Shift 0.000
Secondary2 Clock Global Output Delay from CLKC 0.200

#####################################
# Dynamic Stream Data
#####################################
--------------------------------------
|NAME    |SDIN     |VALUE   |TYPE     |
--------------------------------------
|FINDIV  |[6:0]    |0000101 |EDIT     |
|FBDIV   |[13:7]   |0100000 |EDIT     |
|OADIV   |[18:14]  |00100   |EDIT     |
|OBDIV   |[23:19]  |00000   |EDIT     |
|OCDIV   |[28:24]  |00000   |EDIT     |
|OAMUX   |[31:29]  |100     |EDIT     |
|OBMUX   |[34:32]  |000     |EDIT     |
|OCMUX   |[37:35]  |000     |EDIT     |
|FBSEL   |[39:38]  |01      |EDIT     |
|FBDLY   |[44:40]  |00000   |EDIT     |
|XDLYSEL |[45]     |0       |EDIT     |
|DLYGLA  |[50:46]  |00000   |EDIT     |
|DLYGLB  |[55:51]  |00000   |EDIT     |
|DLYGLC  |[60:56]  |00000   |EDIT     |
|DLYYB   |[65:61]  |00000   |EDIT     |
|DLYYC   |[70:66]  |00000   |EDIT     |
|STATASEL|[71]     |X       |MASKED   |
|STATBSEL|[72]     |X       |MASKED   |
|STATCSEL|[73]     |X       |MASKED   |
|VCOSEL  |[76:74]  |100     |EDIT     |
|DYNASEL |[77]     |X       |MASKED   |
|DYNBSEL |[78]     |X       |MASKED   |
|DYNCSEL |[79]     |X       |MASKED   |
|RESETEN |[80]     |1       |READONLY |
```

Below is the resultant Verilog HDL description of a legal dynamic PLL core configuration generated by SmartGen:

```
module dyn_pll_macro(POWERDOWN, CLKA, LOCK, GLA, GLB, GLC, SDIN, SCLK, SSHIFT, SUPDATE,
  MODE, SDOUT, CLKB, CLKC);

input POWERDOWN, CLKA;
output  LOCK, GLA, GLB, GLC;
input  SDIN, SCLK, SSHIFT, SUPDATE, MODE;
output  SDOUT;
input  CLKB, CLKC;

  wire VCC, GND;

  VCC VCC_1_net(.Y(VCC));
  GND GND_1_net(.Y(GND));
```

```
  DYNCCC Core(.CLKA(CLKA), .EXTFB(GND), .POWERDOWN(POWERDOWN), .GLA(GLA), .LOCK(LOCK),
    .CLKB(CLKB), .GLB(GLB), .YB(), .CLKC(CLKC), .GLC(GLC), .YC(), .SDIN(SDIN),
    .SCLK(SCLK), .SSHIFT(SSHIFT), .SUPDATE(SUPDATE), .MODE(MODE), .SDOUT(SDOUT),
    .OADIV0(GND), .OADIV1(GND), .OADIV2(VCC), .OADIV3(GND), .OADIV4(GND), .OAMUX0(GND),
    .OAMUX1(GND), .OAMUX2(VCC), .DLYGLA0(GND), .DLYGLA1(GND), .DLYGLA2(GND),
    .DLYGLA3(GND), .DLYGLA4(GND), .OBDIV0(GND), .OBDIV1(GND), .OBDIV2(GND),
    .OBDIV3(GND), .OBDIV4(GND), .OBMUX0(GND), .OBMUX1(GND), .OBMUX2(GND), .DLYYB0(GND),
    .DLYYB1(GND), .DLYYB2(GND), .DLYYB3(GND), .DLYYB4(GND), .DLYGLB0(GND),
    .DLYGLB1(GND), .DLYGLB2(GND), .DLYGLB3(GND), .DLYGLB4(GND), .OCDIV0(GND),
    .OCDIV1(GND), .OCDIV2(GND), .OCDIV3(GND), .OCDIV4(GND), .OCMUX0(GND), .OCMUX1(GND),
    .OCMUX2(GND), .DLYYC0(GND), .DLYYC1(GND), .DLYYC2(GND), .DLYYC3(GND), .DLYYC4(GND),
    .DLYGLC0(GND), .DLYGLC1(GND), .DLYGLC2(GND), .DLYGLC3(GND), .DLYGLC4(GND),
    .FINDIV0(VCC), .FINDIV1(GND), .FINDIV2(VCC), .FINDIV3(GND), .FINDIV4(GND),
    .FINDIV5(GND), .FINDIV6(GND), .FBDIV0(GND), .FBDIV1(GND), .FBDIV2(GND),
    .FBDIV3(GND), .FBDIV4(GND), .FBDIV5(VCC), .FBDIV6(GND), .FBDLY0(GND), .FBDLY1(GND),
    .FBDLY2(GND), .FBDLY3(GND), .FBDLY4(GND), .FBSEL0(VCC), .FBSEL1(GND),
    .XDLYSEL(GND), .VCOSEL0(GND), .VCOSEL1(GND), .VCOSEL2(VCC));
  defparam Core.VCOFREQUENCY = 165.000;

endmodule
```

## Delayed Clock Configuration

The CLKDLY macro can be generated with the desired delay and input clock source (Hardwired I/O, External I/O, or Core Logic), as in Figure 4-28.

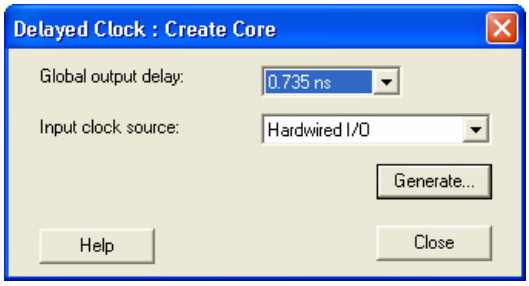


***Figure 4-28* • Delayed Clock Configuration Dialog Box**

After setting all the required parameters, users can generate one or more PLL configurations with HDL or EDIF descriptions by clicking the **Generate** button. SmartGen gives the option of saving session results and messages in a log file:

```
****************
Macro Parameters
****************

Name                            : delay_macro
Family                          : ProASIC3
Output Format                   : Verilog
Type                            : Delayed Clock
Delay Index                     : 2
CLKA Source                     : Hardwired I/O

Total Clock Delay = 0.935 ns.

The resultant CLKDLY macro Verilog netlist is as follows:

module delay_macro(GL,CLK);

output GL;
input  CLK;
```

```
  wire VCC, GND;

  VCC VCC_1_net(.Y(VCC));
  GND GND_1_net(.Y(GND));
  CLKDLY Inst1(.CLK(CLK), .GL(GL), .DLYGL0(VCC), .DLYGL1(GND), .DLYGL2(VCC),
    .DLYGL3(GND), .DLYGL4(GND));

endmodule
```

# Detailed Usage Information

## Clock Frequency Synthesis

Deriving clocks of various frequencies from a single reference clock is known as frequency synthesis. The PLL has an input frequency range from 1.5 to 350 MHz. This frequency is automatically divided down to a range between 1.5 MHz and 5.5 MHz by input dividers (not shown in Figure 4-19 on page 84) between PLL macro inputs and PLL phase detector inputs. The VCO output is capable of an output range from 24 to 350 MHz. With dividers before the input to the PLL core and following the VCO outputs, the VCO output frequency can be divided to provide the final frequency range from 0.75 to 350 MHz. Using SmartGen, the dividers are automatically set to achieve the closest possible matches to the specified output frequencies.

Users should be cautious when selecting the desired PLL input and output frequencies and the I/O buffer standard used to connect to the PLL input and output clocks. Depending on the I/O standards used for the PLL input and output clocks, the I/O frequencies have different maximum limits. Refer to the family datasheets for specifications of maximum I/O frequencies for supported I/O standards. Desired PLL input or output frequencies will not be achieved if the selected frequencies are higher than the maximum I/O frequencies allowed by the selected I/O standards. Users should be careful when selecting the I/O standards used for PLL input and output clocks. Performing post-layout simulation can help detect this type of error, which will be identified with pulse width violation errors. Users are strongly encouraged to perform post-layout simulation to ensure the I/O standard used can provide the desired PLL input or output frequencies. Users can also choose to cascade PLLs together to achieve the high frequencies needed for their applications. Details of cascading PLLs are discussed in the "Cascading CCCs" section on page 109.

In SmartGen, the actual generated frequency (under typical operating conditions) will be displayed beside the requested output frequency value. This provides the ability to determine the exact frequency that can be generated by SmartGen, in real time. The log file generated by SmartGen is a useful tool in determining how closely the requested clock frequencies match the user specifications. For example, assume a user specifies 101 MHz as one of the secondary output frequencies. If the best output frequency that could be achieved were 100 MHz, the log file generated by SmartGen would indicate the actual generated frequency.

## Simulation Verification

The integration of the generated PLL and CLKDLY modules is similar to any VHDL component or Verilog module instantiation in a larger design; i.e., there is no special requirement that users need to take into account to successfully synthesize their designs.

For simulation purposes, users need to refer to the VITAL or Verilog library that includes the functional description and associated timing parameters. Refer to the Software Tools section of the Microsemi SoC Products Group website to obtain the family simulation libraries. If Designer is installed, these libraries are stored in the following locations:

*<Designer_Installation_Directory>\lib\vtl\95\proasic3.vhd*

*<Designer_Installation_Directory>\lib\vtl\95\proasic3e.vhd*

*<Designer_Installation_Directory>\lib\vlog\proasic3.v*

*<Designer_Installation_Directory>\lib\vlog\proasic3e.v*

For Libero users, there is no need to compile the simulation libraries, as they are conveniently pre-compiled in the Model*Sim*® Microsemi simulation tool.

The following is an example of a PLL configuration utilizing the clock frequency synthesis and clock delay adjustment features. The steps include generating the PLL core with SmartGen, performing simulation for verification with Model*Sim*, and performing static timing analysis with SmartTime in Designer.

Parameters of the example PLL configuration:

Input Frequency – 20 MHz

Primary Output Requirement – 20 MHz with clock advancement of 3.02 ns

Secondary 1 Output Requirement – 40 MHz with clock delay of 2.515 ns

Figure 4-29 shows the SmartGen settings. Notice that the overall delays are calculated automatically, allowing the user to adjust the delay elements appropriately to obtain the desired delays.

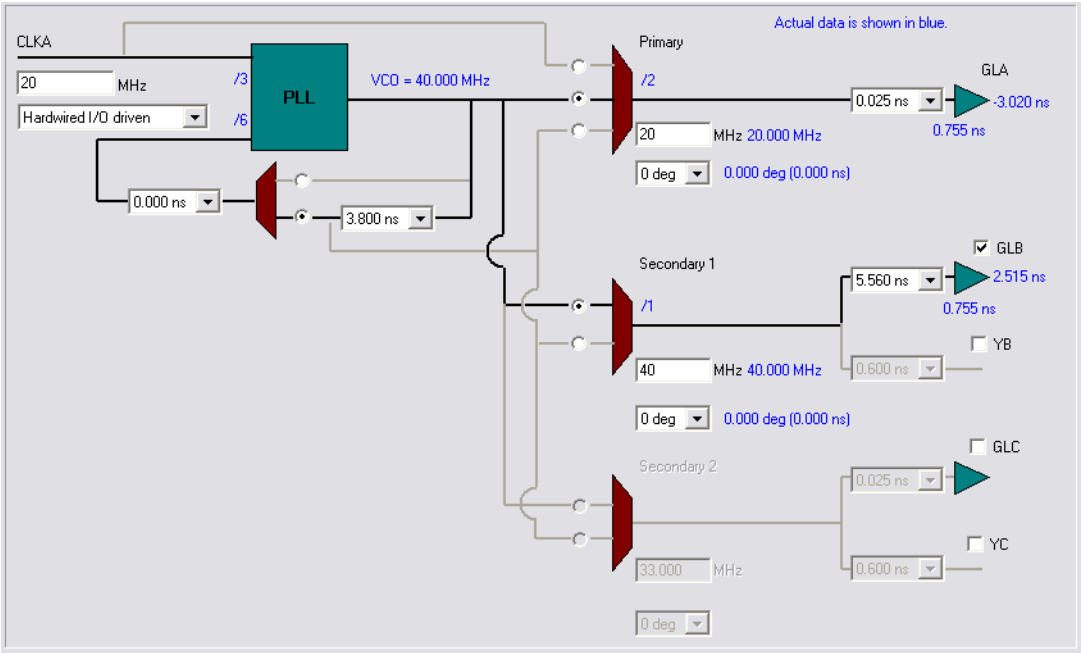


***Figure 4-29* • SmartGen Settings**

After confirming the correct settings, generate a structural netlist of the PLL and verify PLL core settings by checking the log file:

```
Name                          : test_pll_delays
Family                        : ProASIC3E
Output Format                 : VHDL
Type                          : Static PLL
Input Freq(MHz)               : 20.000
CLKA Source                   : Hardwired I/O
Feedback Delay Value Index    : 21
Feedback Mux Select           : 2
XDLY Mux Select               : No
Primary Freq(MHz)             : 20.000
Primary PhaseShift            : 0
Primary Delay Value Index     : 1
Primary Mux Select            : 4
Secondary1 Freq(MHz)          : 40.000
Use GLB                       : YES
Use YB                        : NO
…
…
…
Primary Clock frequency 20.000
Primary Clock Phase Shift 0.000
```

```
Primary Clock Output Delay from CLKA -3.020

Secondary1 Clock frequency 40.000
Secondary1 Clock Phase Shift 0.000
Secondary1 Clock Global Output Delay from CLKA 2.515
```

Next, perform simulation in Model*Sim* to verify the correct delays. Figure 4-30 shows the simulation results. The delay values match those reported in the SmartGen PLL Wizard.

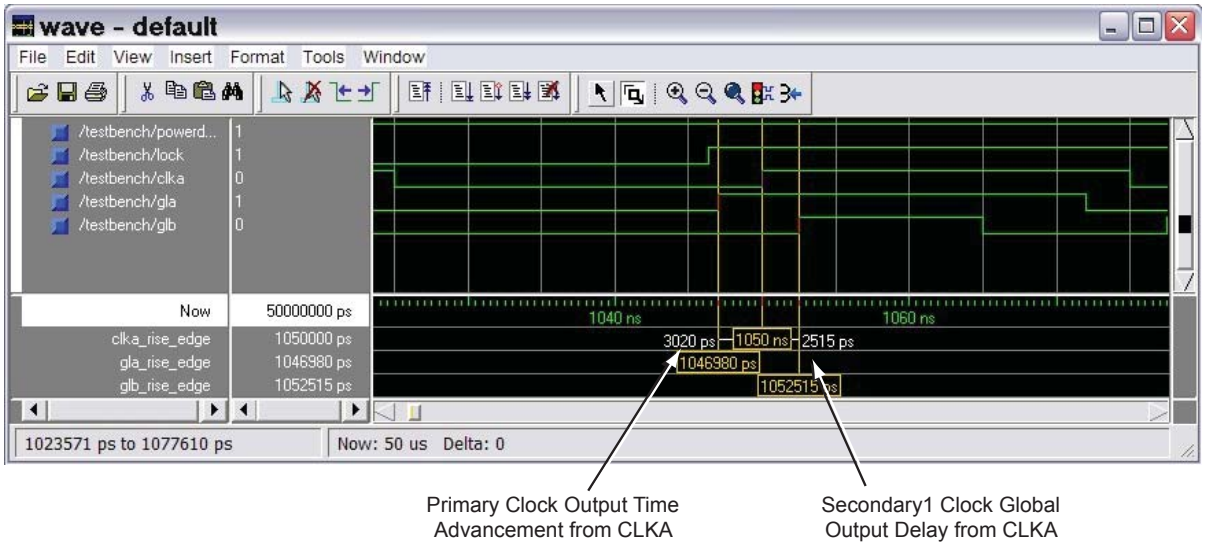


***Figure 4-30*** **• Model*Sim* Simulation Results**

The timing can also be analyzed using SmartTime in Designer. The user should import the synthesized netlist to Designer, perform Compile and Layout, and then invoke SmartTime. Go to **Tools** > **Options** and change the maximum delay operating conditions to **Typical Case**. Then expand the Clock-to-Out paths of GLA and GLB and the individual components of the path delays are shown. The path of GLA is shown in Figure 4-31 on page 107 displaying the same delay value.

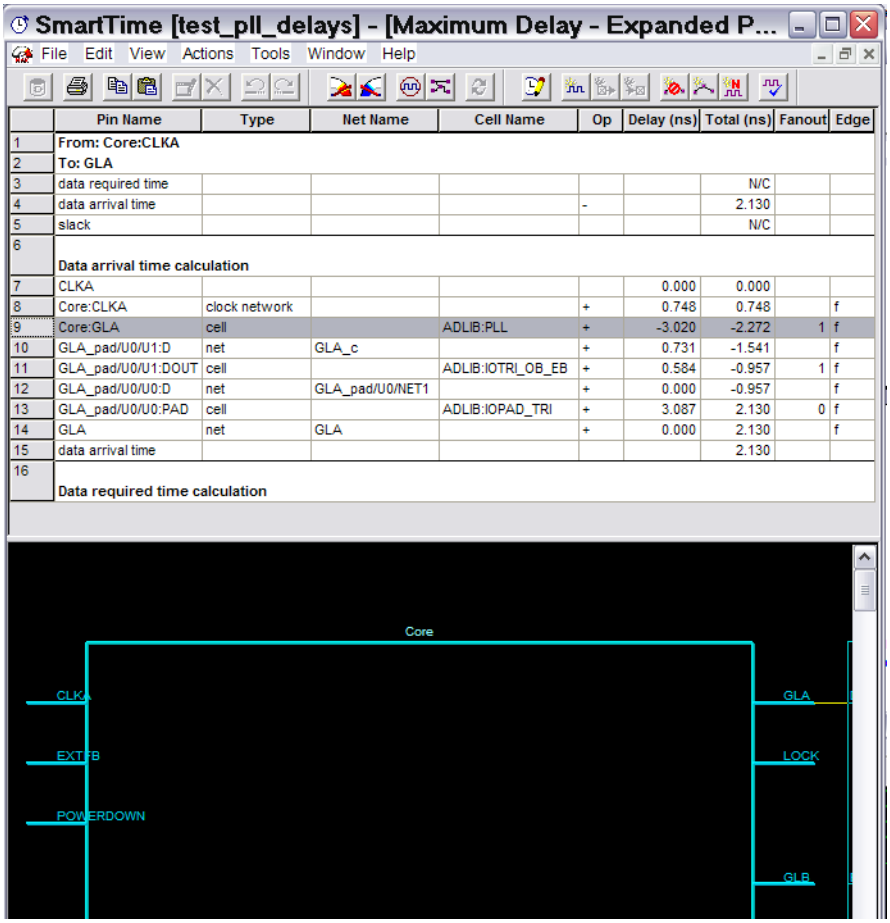


| | Pin Name | Type | Net Name | Cell Name | Op | Delay (ns) | Total (ns) | Fanout | Edge |
|---|---|---|---|---|---|---|---|---|---|
| 1 | From: Core:CLKA | | | | | | | | |
| 2 | To: GLA | | | | | | | | |
| 3 | data required time | | | | | | N/C | | |
| 4 | data arrival time | | | | - | | 2.130 | | |
| 5 | slack | | | | | | N/C | | |
| 6 | Data arrival time calculation | | | | | | | | |
| 7 | CLKA | | | | | 0.000 | 0.000 | | |
| 8 | Core:CLKA | clock network | | | + | 0.748 | 0.748 | | f |
| 9 | Core:GLA | cell | | ADLIB:PLL | + | -3.020 | -2.272 | 1 | f |
| 10 | GLA_pad/U0/U1:D | net | GLA_c | | + | 0.731 | -1.541 | | f |
| 11 | GLA_pad/U0/U1:DOUT | cell | | ADLIB:IOTRI_OB_EB | + | 0.584 | -0.957 | 1 | f |
| 12 | GLA_pad/U0/U0:D | net | GLA_pad/U0/NET1 | | + | 0.000 | -0.957 | | f |
| 13 | GLA_pad/U0/U0:PAD | cell | | ADLIB:IOPAD_TRI | + | 3.087 | 2.130 | 0 | f |
| 14 | GLA | net | GLA | | + | 0.000 | 2.130 | | f |
| 15 | data arrival time | | | | | | 2.130 | | |
| 16 | Data required time calculation | | | | | | | | |

***Figure 4-31*** **• Static Timing Analysis Using SmartTime**

### Place-and-Route Stage Considerations

Several considerations must be noted to properly place the CCC macros for layout.

For CCCs with clock inputs configured with the Hardwired I/O–Driven option:

- PLL macros must have the clock input pad coming from one of the GmA* locations.
- CLKDLY macros must have the clock input pad coming from one of the Global I/Os.

If a PLL with a Hardwired I/O input is used at a CCC location and a Hardwired I/O–Driven CLKDLY macro is used at the same CCC location, the clock input of the CLKDLY macro must be chosen from one of the GmB* or GmC* pin locations. If the PLL is not used or is an External I/O–Driven or Core Logic–Driven PLL, the clock input of the CLKDLY macro can be sourced from the GmA*, GmB*, or GmC* pin locations.

For CCCs with clock inputs configured with the External I/O–Driven option, the clock input pad can be assigned to any regular I/O location (IO******** pins). Note that since global I/O pins can also be used as regular I/Os, regardless of CCC function (CLKDLY or PLL), clock inputs can also be placed in any of these I/O locations.

By default, the Designer layout engine will place global nets in the design at one of the six chip globals. When the number of globals in the design is greater than six, the Designer layout engine will automatically assign additional globals to the quadrant global networks of the low power flash devices. If the user wishes to decide which global signals should be assigned to chip globals (six available) and which to the quadrant globals (three per quadrant for a total of 12 available), the assignment can be achieved with PinEditor, ChipPlanner, or by importing a placement constraint file. Layout will fail if the

global assignments are not allocated properly. See the "Physical Constraints for Quadrant Clocks" section for information on assigning global signals to the quadrant clock networks.

Promoted global signals will be instantiated with CLKINT macros to drive these signals onto the global network. This is automatically done by Designer when the Auto-Promotion option is selected. If the user wishes to assign the signals to the quadrant globals instead of the default chip globals, this can done by using ChipPlanner, by declaring a physical design constraint (PDC), or by importing a PDC file.

## Physical Constraints for Quadrant Clocks

If it is necessary to promote global clocks (CLKBUF, CLKINT, PLL, CLKDLY) to quadrant clocks, the user can define PDCs to execute the promotion. PDCs can be created using PDC commands (pre-compile) or the MultiView Navigator (MVN) interface (post-compile). The advantage of using the PDC flow over the MVN flow is that the Compile stage is able to automatically promote any regular net to a global net before assigning it to a quadrant. There are three options to place a quadrant clock using PDC commands:

- Place a clock core (not hardwired to an I/O) into a quadrant clock location.
- Place a clock core (hardwired to an I/O) into an I/O location (set_io) or an I/O module location (set_location) that drives a quadrant clock location.
- Assign a net driven by a regular net or a clock net to a quadrant clock using the following command:

  ```
  assign_local_clock -net <net name> -type quadrant <quadrant clock region>
  ```

  where

  `<net name>` is the name of the net assigned to the local user clock region.

  `<quadrant clock region>` defines which quadrant the net should be assigned to. Quadrant clock regions are defined as UL (upper left), UR (upper right), LL (lower left), and LR (lower right).

Note: If the net is a regular net, the software inserts a CLKINT buffer on the net.

For example:

```
assign_local_clock -net localReset -type quadrant UR
```

Keep in mind the following when placing quadrant clocks using MultiView Navigator:

### Hardwired I/O–Driven CCCs

- Find the associated clock input port under the Ports tab, and place the input port at one of the Gmn* locations using PinEditor or I/O Attribute Editor, as shown in Figure 4-32.

*Figure 4-32* • **Port Assignment for a CCC with Hardwired I/O Clock Input**

- Use quadrant global region assignments by finding the clock net associated with the CCC macro under the Nets tab and creating a quadrant global region for the net, as shown in Figure 4-33.

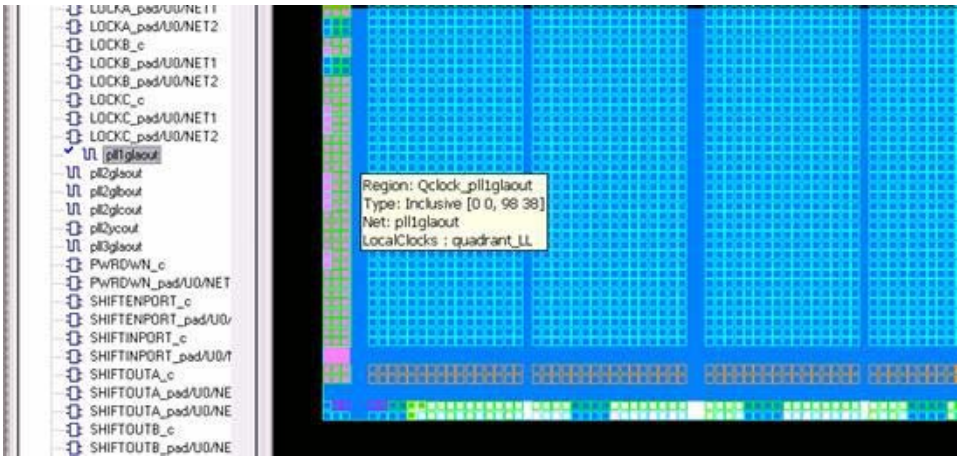


***Figure 4-33*** **• Quadrant Clock Assignment for a Global Net**

### External I/O–Driven CCCs

The above-mentioned recommendation for proper layout techniques will ensure the correct assignment. It is possible that, especially with External I/O–Driven CCC macros, placement of the CCC macro in a desired location may not be achieved. For example, assigning an input port of an External I/O–Driven CCC near a particular CCC location does not guarantee global assignments to the desired location. This is because the clock inputs of External I/O–Driven CCCs can be assigned to any I/O location; therefore, it is possible that the CCC connected to the clock input will be routed to a location other than the one closest to the I/O location, depending on resource availability and placement constraints.

### Clock Placer

The clock placer is a placement engine for low power flash devices that places global signals on the chip global and quadrant global networks. Based on the clock assignment constraints for the chip global and quadrant global clocks, it will try to satisfy all constraints, as well as creating quadrant clock regions when necessary. If the clock placer fails to create the quadrant clock regions for the global signals, it will report an error and stop Layout.

The user must ensure that the constraints set to promote clock signals to quadrant global networks are valid.

## Cascading CCCs

The CCCs in low power flash devices can be cascaded. Cascading CCCs can help achieve more accurate PLL output frequency results than those achievable with a single CCC. In addition, this technique is useful when the user application requires the output clock of the PLL to be a multiple of the reference clock by an integer greater than the maximum feedback divider value of the PLL (divide by 128) to achieve the desired frequency.

For example, the user application may require a 280 MHz output clock using a 2 MHz input reference clock, as shown in Figure 4-34 on page 110.

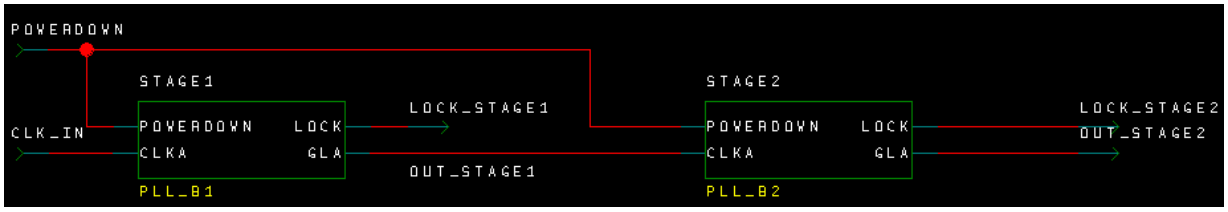


***Figure 4-34* • Cascade PLL Configuration**

Using internal feedback, we know from EQ 4-1 on page 86 that the maximum achievable output frequency from the primary output is

$$f_{GLA} = f_{CLKA} \times m / (n \times u) = 2\ \text{MHz} \times 128 / (1 \times 1) = 256\ \text{MHz}$$

*EQ 4-5*

Figure 4-35 shows the settings of the initial PLL. When configuring the initial PLL, specify the input to be either Hardwired I/O–Driven or External I/O–Driven. This generates a netlist with the initial PLL routed from an I/O. Do not specify the input to be Core Logic–Driven, as this prohibits the connection from the I/O pin to the input of the PLL.

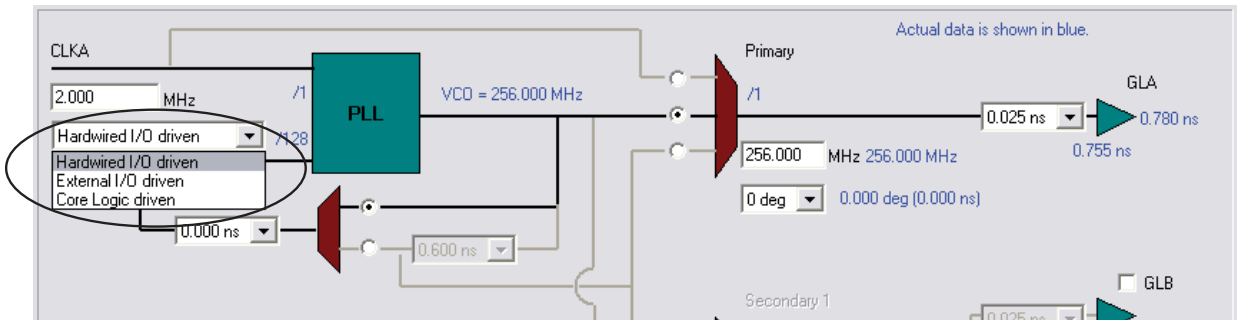


***Figure 4-35* • First-Stage PLL Showing Input of 2 MHz and Output of 256 MHz**

A second PLL can be connected serially to achieve the required frequency. EQ 4-1 on page 86 to EQ 4-3 on page 86 are extended as follows:

$$f_{GLA2} = f_{GLA} \times m_2 / (n_2 \times u_2) = f_{CLKA1} \times m_1 \times m_2 / (n_1 \times u_1 \times n_2 \times u_2) \text{ – Primary PLL Output Clock}$$

*EQ 4-6*

$$f_{GLB2} = f_{YB2} = f_{CLKA1} \times m_1 \times m_2 / (n_1 \times n_2 \times v_1 \times v_2) \text{ – Secondary 1 PLL Output Clock(s)}$$

*EQ 4-7*

$$f_{GLC2} = f_{YC2} = f_{CLKA1} \times m_1 \times m_2 / (n_1 \times n_2 \times w_1 \times w2) \text{ – Secondary 2 PLL Output Clock(s)}$$

*EQ 4-8*

In the example, the final output frequency ($f_{output}$) from the primary output of the second PLL will be as follows (EQ 4-9):

$$f_{output} = f_{GLA2} = f_{GLA} \times m_2 / (n_2 \times u_2) = 256\ \text{MHz} \times 70 / (64 \times 1) = 280\ \text{MHz}$$

*EQ 4-9*

Figure 4-36 on page 111 shows the settings of the second PLL. When configuring the second PLL (or any subsequent-stage PLLs), specify the input to be Core Logic–Driven. This generates a netlist with the second PLL routed internally from the core. Do not specify the input to be Hardwired I/O–Driven or External I/O–Driven, as these options prohibit the connection from the output of the first PLL to the input of the second PLL.

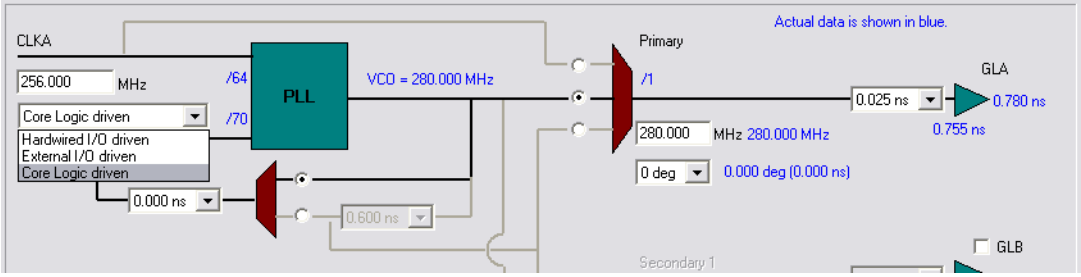


***Figure 4-36*** **• Second-Stage PLL Showing Input of 256 MHz from First Stage and Final Output of 280 MHz**

Figure 4-37 shows the simulation results, where the first PLL's output period is 3.9 ns (~256 MHz), and the stage 2 (final) output period is 3.56 ns (~280 MHz).

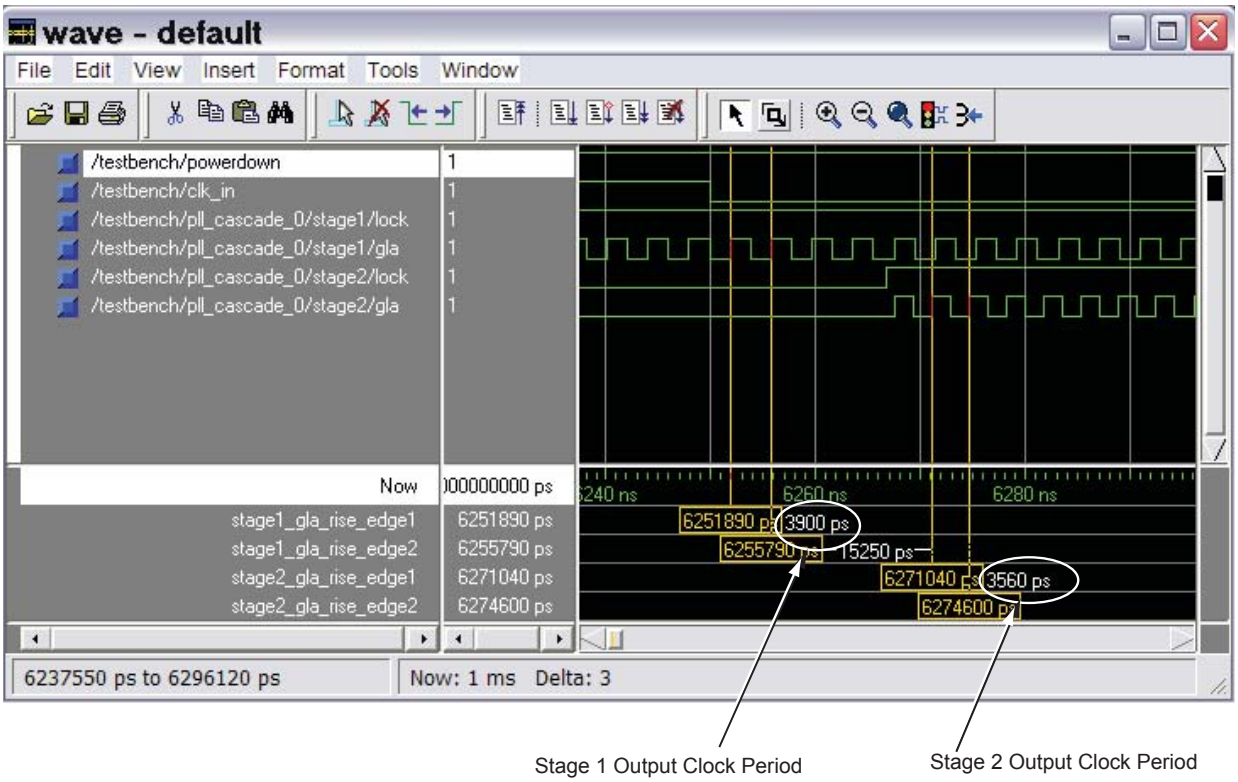


***Figure 4-37*** **• Model*Sim* Simulation Results**

# Recommended Board-Level Considerations

The power to the PLL core is supplied by VCCPLA/B/C/D/E/F (VCCPLx), and the associated ground connections are supplied by VCOMPLA/B/C/D/E/F (VCOMPLx). When the PLLs are not used, the Designer place-and-route tool automatically disables the unused PLLs to lower power consumption. The user should tie unused VCCPLx and VCOMPLx pins to ground. Optionally, the PLL can be turned on/off during normal device operation via the POWERDOWN port (see Table 4-3 on page 68).

## PLL Power Supply Decoupling Scheme

The PLL core is designed to tolerate noise levels on the PLL power supply as specified in the datasheets. When operated within the noise limits, the PLL will meet the output peak-to-peak jitter specifications specified in the datasheets. User applications should always ensure the PLL power supply is powered from a noise-free or low-noise power source.

However, in situations where the PLL power supply noise level is higher than the tolerable limits, various decoupling schemes can be designed to suppress noise to the PLL power supply. An example is provided in Figure 4-38. The VCCPLx and VCOMPLx pins correspond to the PLL analog power supply and ground.

Microsemi strongly recommends that two ceramic capacitors (10 nF in parallel with 100 nF) be placed close to the power pins (less than 1 inch away). A third generic 10 µF electrolytic capacitor is recommended for low-frequency noise and should be placed farther away due to its large physical size. Microsemi recommends that a 6.8 µH inductor be placed between the supply source and the capacitors to filter out any low-/medium- and high-frequency noise. In addition, the PCB layers should be controlled so the VCCPLx and VCOMPLx planes have the minimum separation possible, thus generating a good-quality RF capacitor.

For more recommendations, refer to the *Board-Level Considerations* application note.

Recommended 100 nF capacitor:

- Producer BC Components, type X7R, 100 nF, 16 V
- BC Components part number: 0603B104K160BT
- Digi-Key part number: BC1254CT-ND
- Digi-Key part number: BC1254TR-ND

Recommended 10 nF capacitor:

- Surface-mount ceramic capacitor
- Producer BC Components, type X7R, 10 nF, 50 V
- BC Components part number: 0603B103K500BT
- Digi-Key part number: BC1252CT-ND
- Digi-Key part number: BC1252TR-ND

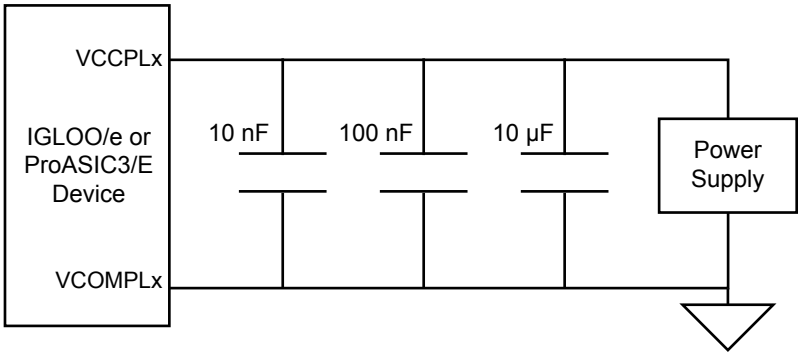


***Figure 4-38*** **• Decoupling Scheme for One PLL (should be replicated for each PLL used)**

# Conclusion

The advanced CCCs of the IGLOO and ProASIC3 devices are ideal for applications requiring precise clock management. They integrate easily with the internal low-skew clock networks and provide flexible frequency synthesis, clock deskewing, and/or time-shifting operations.

# Related Documents

## Application Notes

*Board-Level Considerations*

http://www.microsemi.com/soc/documents/ALL_AC276_AN.pdf

## Datasheets

*Fusion Family of Mixed Signal FPGAs*

http://www.microsemi.com/soc/documents/Fusion_DS.pdf

## User's Guides

*IGLOO, ProASIC3, SmartFusion, and Fusion Macro Library Guide*

http://www.microsemi.com/soc/documents/pa3_libguide_ug.pdf

# List of Changes

The following table lists critical changes that were made in each revision of the chapter.

| Date | Changes | Page |
|---|---|---|
| August 2012 | The "Implementing EXTFB in ProASIC3/E Devices" section is new (SAR 36647). | 70 |
| | Table 4-7 • Delay Values in Libero SoC Software per Device Family was added to the "Clock Delay Adjustment" section (SAR 22709). | 86 |
| | The "Phase Adjustment" section was rewritten to explain better why the visual CCC shows both the actual phase and the actual delay that is equivalent to this phase shift (SAR 29647). | 87 |
| | The hyperlink for the *Board-Level Considerations* application note was corrected (SAR 36663) | 112, 113 |
| December 2011 | Figure 4-20 • PLL Block Diagram, Figure 4-22 • CCC Block Control Bits – Graphical Representation of Assignments, and Table 4-12 • MUXA, MUXB, MUXC were revised to change the phase shift assignments for PLLs 4 through 7 (SAR 33791). | 85, 89, 93 |
| June 2011 | The description for RESETEN in Table 4-8 • Configuration Bit Descriptions for the CCC Blocks was revised. The phrase "and should not be modified via dynamic configuration" was deleted because RESETEN is read only (SAR 25949). | 90 |
| July 2010 | This chapter is no longer published separately with its own part number and version but is now part of several FPGA fabric user's guides. | N/A |
| | Notes were added where appropriate to point out that IGLOO nano and ProASIC3 nano devices do not support differential inputs (SAR 21449). | N/A |

| Date | Changes | Page |
|---|---|---|
| v1.4 (December 2008) | The"CCC Support in Microsemi's Flash Devices" section was updated to include IGLOO nano and ProASIC3 nano devices. | 63 |
| | Figure 4-2 • CCC Options: Global Buffers with No Programmable Delay was revised to add the CLKBIBUF macro. | 64 |
| | The description of the reference clock was revised in Table 4-2 • Input and Output Description of the CLKDLY Macro. | 65 |
| | Figure 4-7 • Clock Input Sources (30 k gates devices and below) is new. Figure 4-8 • Clock Input Sources Including CLKBUF, CLKBUF_LVDS/LVPECL, and CLKINT (60 k gates devices and above) applies to 60 k gate devices and above. | 72 |
| | The "IGLOO and ProASIC3" section was updated to include information for IGLOO nano devices. | 73 |
| | A note regarding Fusion CCCs was added to Figure 4-9 • Illustration of Hardwired I/O (global input pins) Usage for IGLOO and ProASIC3 devices 60 k Gates and Larger and the name of the figure was changed from Figure 4-8 • Illustration of Hardwired I/O (global input pins) Usage. Figure 4-10 • Illustration of Hardwired I/O (global input pins) Usage for IGLOO and ProASIC3 devices 30 k Gates and Smaller is new. | 74 |
| | Table 4-5 • Number of CCCs by Device Size and Package was updated to include IGLOO nano and ProASIC3 nano devices. Entries were added to note differences for the CS81, CS121, and CS201 packages. | 78 |
| | The "Clock Conditioning Circuits without Integrated PLLs" section was rewritten. | 79 |
| | The "IGLOO and ProASIC3 CCC Locations" section was updated for nano devices. | 81 |
| | Figure 4-13 • CCC Locations in the 15 k and 30 k Gate Devices was deleted. | 4-20 |
| v1.3 (October 2008) | This document was updated to include Fusion and RT ProASIC3 device information. Please review the document very carefully. | N/A |
| | The "CCC Support in Microsemi's Flash Devices" section was updated. | 63 |
| | In the "Global Buffer with Programmable Delay" section, the following sentence was changed from:<br>"In this case, the I/O must be placed in one of the dedicated global I/O locations."<br>To<br>"In this case, the software will automatically place the dedicated global I/O in the appropriate locations." | 64 |
| | Figure 4-4 • CCC Options: Global Buffers with PLL was updated to include OADIVRST and OADIVHALF. | 67 |
| | In Figure 4-6 • CCC with PLL Block "fixed delay" was changed to "programmable delay". | 67 |
| | Table 4-3 • Input and Output Signals of the PLL Block was updated to include OADIVRST and OADIVHALF descriptions. | 68 |
| | Table 4-8 • Configuration Bit Descriptions for the CCC Blocks was updated to include configuration bits 88 to 81. Note 2 is new. In addition, the description for bit <76:74> was updated. | 90 |
| | Table 4-16 • Fusion Dynamic CCC Clock Source Selection and Table 4-17 • Fusion Dynamic CCC NGMUX Configuration are new. | 94 |
| | Table 4-18 • Fusion Dynamic CCC Division by Half Configuration and Table 4-19 • Configuration Bit <76:75> / VCOSEL<2:1> Selection for All Families are new. | 95 |

| Date | Changes | Page |
|---|---|---|
| v1.2<br>(June 2008) | The following changes were made to the family descriptions in Figure 4-1 • Overview of the CCCs Offered in Fusion, IGLOO, and ProASIC3:<br>• ProASIC3L was updated to include 1.5 V.<br>• The number of PLLs for ProASIC3E was changed from five to six. | 61 |
| v1.1<br>(March 2008) | Table 4-1 • Flash-Based FPGAs and the associated text were updated to include the IGLOO PLUS family. The "IGLOO Terminology" section and "ProASIC3 Terminology" section are new. | 63 |
| | The "Global Input Selections" section was updated to include 15 k gate devices as supported I/O types for globals, for CCC only. | 71 |
| | Table 4-5 • Number of CCCs by Device Size and Package was revised to include ProASIC3L, IGLOO PLUS, A3P015, AGL015, AGLP030, AGLP060, and AGLP125. | 78 |
| | The "IGLOO and ProASIC3 CCC Locations" section was revised to include 15 k gate devices in the exception statements, as they do not contain PLLs. | 81 |
| v1.0<br>(January 2008) | Information about unlocking the PLL was removed from the "Dynamic PLL Configuration" section. | 87 |
| | In the "Dynamic PLL Configuration" section, information was added about running Layout and determining the exact setting of the ports. | 100 |
| | In Table 4-8 • Configuration Bit Descriptions for the CCC Blocks, the following bits were updated to delete "transport to the user" and reference the footnote at the bottom of the table: 79 to 71. | 90 |

# 5 – FlashROM in Microsemi's Low Power Flash Devices

## Introduction

The Fusion, IGLOO, and ProASIC3 families of low power flash-based devices have a dedicated nonvolatile FlashROM memory of 1,024 bits, which provides a unique feature in the FPGA market. The FlashROM can be read, modified, and written using the JTAG (or UJTAG) interface. It can be read but not modified from the FPGA core. Only low power flash devices contain on-chip user nonvolatile memory (NVM).

## Architecture of User Nonvolatile FlashROM

Low power flash devices have 1 kbit of user-accessible nonvolatile flash memory on-chip that can be read from the FPGA core fabric. The FlashROM is arranged in eight banks of 128 bits (16 bytes) during programming. The 128 bits in each bank are addressable as 16 bytes during the read-back of the FlashROM from the FPGA core. Figure 5-1 shows the FlashROM logical structure.

The FlashROM can only be programmed via the IEEE 1532 JTAG port. It cannot be programmed directly from the FPGA core. When programming, each of the eight 128-bit banks can be selectively reprogrammed. The FlashROM can only be reprogrammed on a bank boundary. Programming involves an automatic, on-chip bank erase prior to reprogramming the bank. The FlashROM supports synchronous read. The address is latched on the rising edge of the clock, and the new output data is stable after the falling edge of the same clock cycle. For more information, refer to the timing diagrams in the DC and Switching Characteristics chapter of the appropriate datasheet. The FlashROM can be read on byte boundaries. The upper three bits of the FlashROM address from the FPGA core define the bank being accessed. The lower four bits of the FlashROM address from the FPGA core define which of the 16 bytes in the bank is being accessed.

| | | Byte Number in Bank | | | | | | | | 4 LSB of ADDR (READ) | | | | | | | |
|---|---|---|---|---|---|---|---|---|---|---|---|---|---|---|---|---|---|
| | | 15 | 14 | 13 | 12 | 11 | 10 | 9 | 8 | 7 | 6 | 5 | 4 | 3 | 2 | 1 | 0 |
| Bank Number 3 MSB of ADDR (READ) | 7 | | | | | | | | | | | | | | | | |
| | 6 | | | | | | | | | | | | | | | | |
| | 5 | | | | | | | | | | | | | | | | |
| | 4 | | | | | | | | | | | | | | | | |
| | 3 | | | | | | | | | | | | | | | | |
| | 2 | | | | | | | | | | | | | | | | |
| | 1 | | | | | | | | | | | | | | | | |
| | 0 | | | | | | | | | | | | | | | | |

***Figure 5-1*** **• FlashROM Architecture**

# FlashROM Support in Flash-Based Devices

The flash FPGAs listed in Table 5-1 support the FlashROM feature and the functions described in this document.

***Table 5-1* • Flash-Based FPGAs**

| Series | Family* | Description |
|---|---|---|
| IGLOO | IGLOO | Ultra-low power 1.2 V to 1.5 V FPGAs with Flash*Freeze technology |
| | IGLOOe | Higher density IGLOO FPGAs with six PLLs and additional I/O standards |
| | IGLOO nano | The industry's lowest-power, smallest-size solution |
| | IGLOO PLUS | IGLOO FPGAs with enhanced I/O capabilities |
| ProASIC3 | ProASIC3 | Low power, high-performance 1.5 V FPGAs |
| | ProASIC3E | Higher density ProASIC3 FPGAs with six PLLs and additional I/O standards |
| | ProASIC3 nano | Lowest-cost solution with enhanced I/O capabilities |
| | ProASIC3L | ProASIC3 FPGAs supporting 1.2 V to 1.5 V with Flash*Freeze technology |
| | RT ProASIC3 | Radiation-tolerant RT3PE600L and RT3PE3000L |
| | Military ProASIC3/EL | Military temperature A3PE600L, A3P1000, and A3PE3000L |
| | Automotive ProASIC3 | ProASIC3 FPGAs qualified for automotive applications |
| Fusion | Fusion | Mixed signal FPGA integrating ProASIC3 FPGA fabric, programmable analog block, support for ARM® Cortex™-M1 soft processors, and flash memory into a monolithic device |

*Note: *The device names link to the appropriate datasheet, including product brief, DC and switching characteristics, and packaging information.*

## *IGLOO Terminology*

In documentation, the terms IGLOO series and IGLOO devices refer to all of the IGLOO devices as listed in Table 5-1. Where the information applies to only one product line or limited devices, these exclusions will be explicitly stated.

## *ProASIC3 Terminology*

In documentation, the terms ProASIC3 series and ProASIC3 devices refer to all of the ProASIC3 devices as listed in Table 5-1. Where the information applies to only one product line or limited devices, these exclusions will be explicitly stated.

To further understand the differences between the IGLOO and ProASIC3 devices, refer to the *Industry's Lowest Power FPGAs Portfolio*.

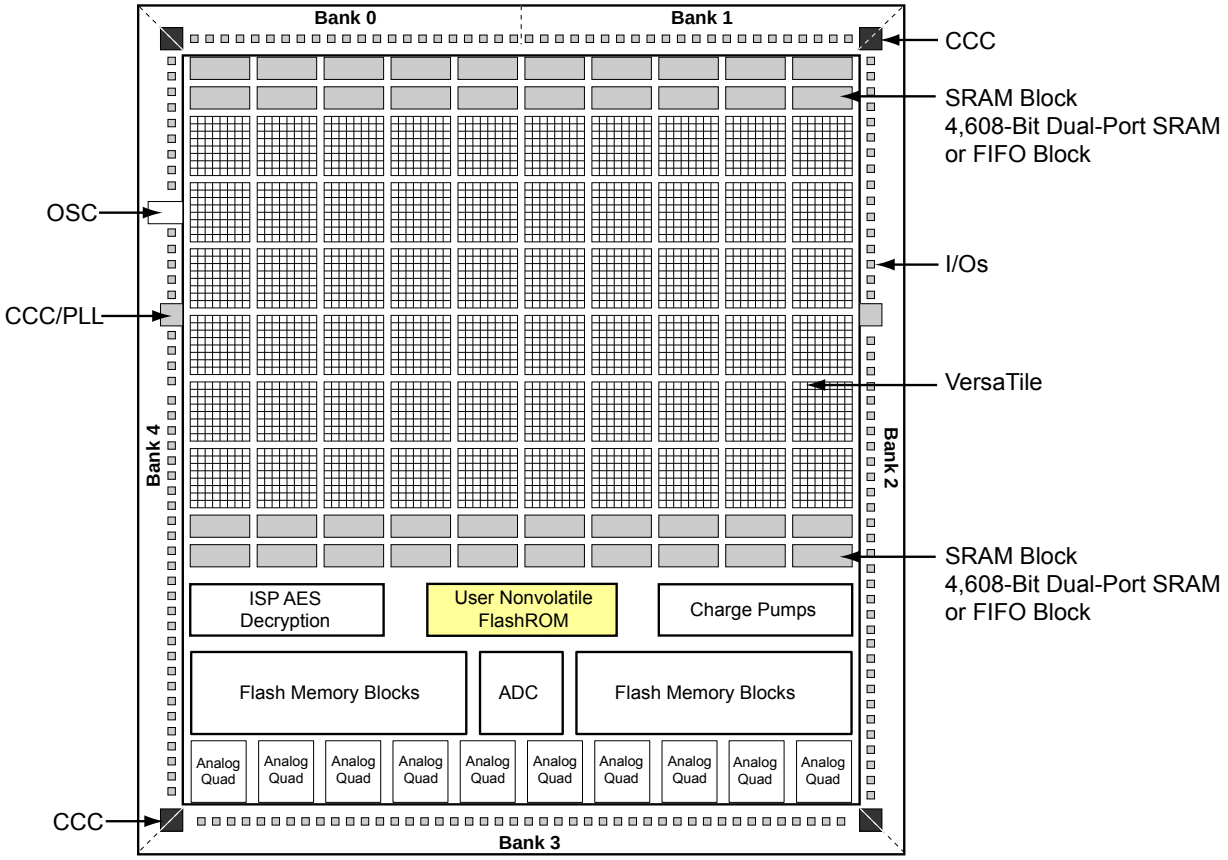


*Figure 5-2* • **Fusion Device Architecture Overview (AFS600)**

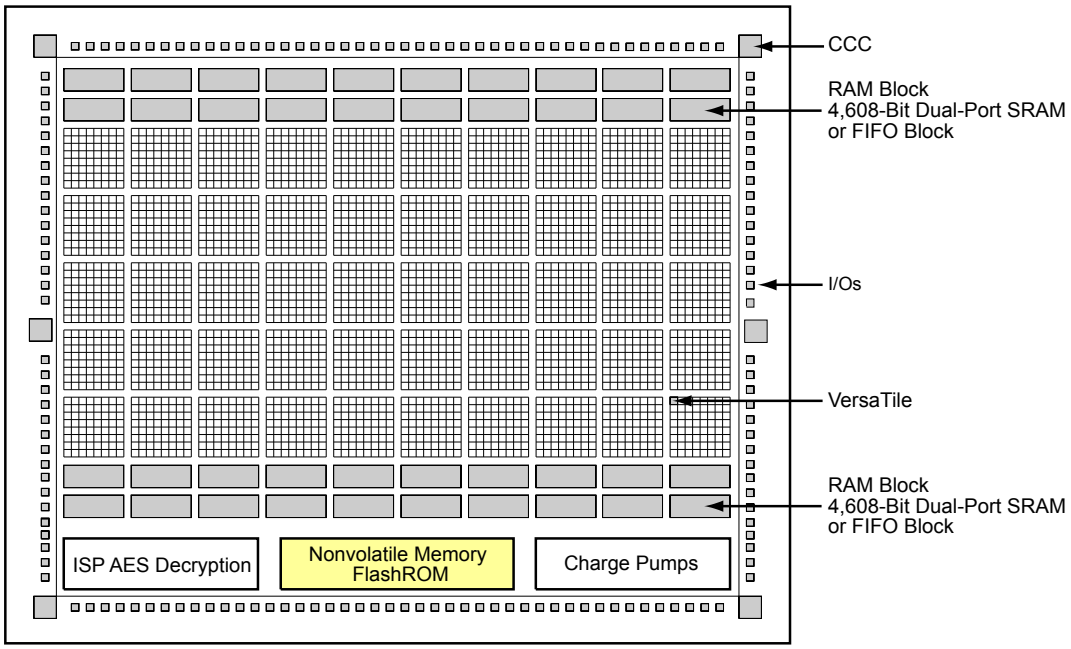


*Figure 5-3* • **ProASIC3 and IGLOO Device Architecture**

# FlashROM Applications

The SmartGen core generator is used to configure FlashROM content. You can configure each page independently. SmartGen enables you to create and modify regions within a page; these regions can be 1 to 16 bytes long (Figure 5-4).

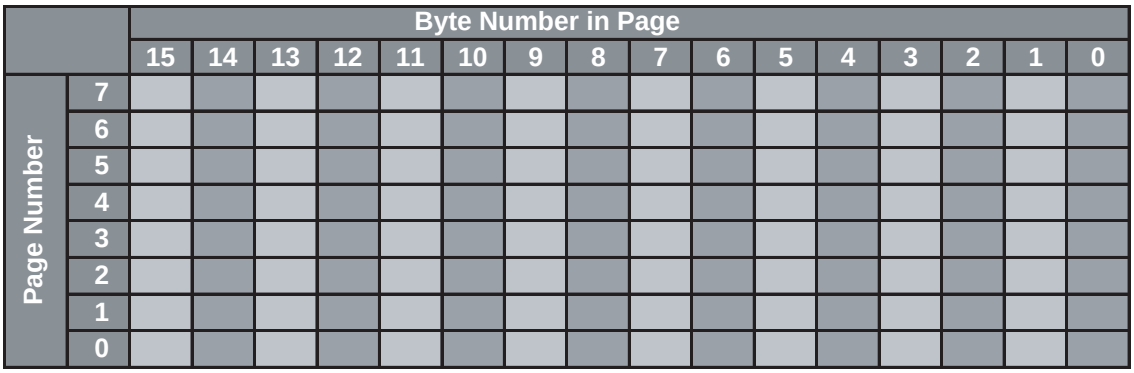


***Figure 5-4*** **• FlashROM Configuration**

The FlashROM content can be changed independently of the FPGA core content. It can be easily accessed and programmed via JTAG, depending on the security settings of the device. The SmartGen core generator enables each region to be independently updated (described in the "Programming and Accessing FlashROM" section on page 122). This enables you to change the FlashROM content on a per-part basis while keeping some regions "constant" for all parts. These features allow the FlashROM to be used in diverse system applications. Consider the following possible uses of FlashROM:

- Internet protocol (IP) addressing (wireless or fixed)
- System calibration settings
- Restoring configuration after unpredictable system power-down
- Device serialization and/or inventory control
- Subscription-based business models (e.g., set-top boxes)
- Secure key storage
- Asset management tracking
- Date stamping
- Version management

# FlashROM Security

Low power flash devices have an on-chip Advanced Encryption Standard (AES) decryption core, combined with an enhanced version of the Microsemi flash-based lock technology (FlashLock®). Together, they provide unmatched levels of security in a programmable logic device. This security applies to both the FPGA core and FlashROM content. These devices use the 128-bit AES (Rijndael) algorithm to encrypt programming files for secure transmission to the on-chip AES decryption core. The same algorithm is then used to decrypt the programming file. This key size provides approximately $3.4 \times 10^{38}$ possible 128-bit keys. A computing system that could find a DES key in a second would take approximately 149 trillion years to crack a 128-bit AES key. The 128-bit FlashLock feature in low power flash devices works via a FlashLock security Pass Key mechanism, where the user locks or unlocks the device with a user-defined key. Refer to the "Security in Low Power Flash Devices" section on page 235.

If the device is locked with certain security settings, functions such as device read, write, and erase are disabled. This unique feature helps to protect against invasive and noninvasive attacks. Without the correct Pass Key, access to the FPGA is denied. To gain access to the FPGA, the device first must be unlocked using the correct Pass Key. During programming of the FlashROM or the FPGA core, you can generate the security header programming file, which is used to program the AES key and/or FlashLock Pass Key. The security header programming file can also be generated independently of the FlashROM and FPGA core content. The FlashLock Pass Key is not stored in the FlashROM.

Low power flash devices with AES-based security allow for secure remote field updates over public networks such as the Internet, and ensure that valuable intellectual property (IP) remains out of the hands of IP thieves. Figure 5-5 shows this flow diagram.

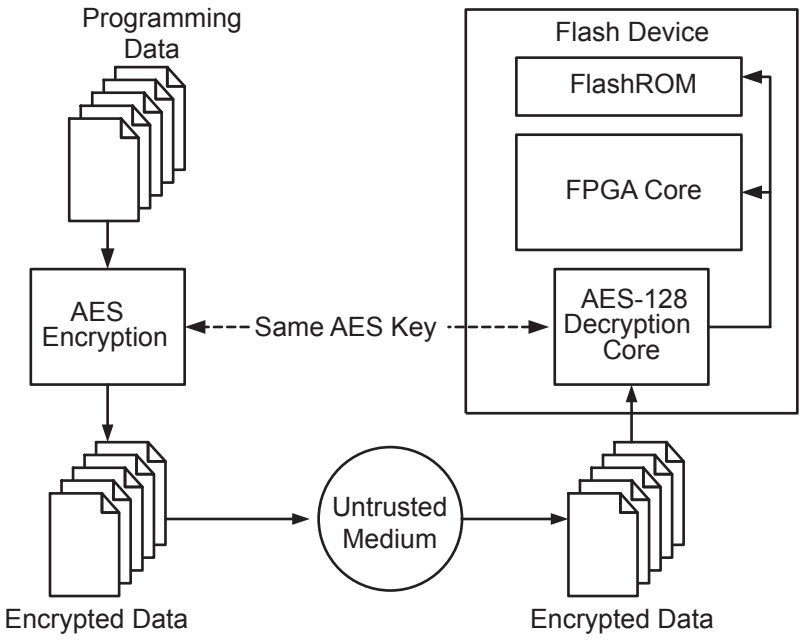


***Figure 5-5*** **• Programming FlashROM Using AES**

# Programming and Accessing FlashROM

The FlashROM content can only be programmed via JTAG, but it can be read back selectively through the JTAG programming interface, the UJTAG interface, or via direct FPGA core addressing. The pages of the FlashROM can be made secure to prevent read-back via JTAG. In that case, read-back on these secured pages is only possible by the FPGA core fabric or via UJTAG.

A 7-bit address from the FPGA core defines which of the eight pages (three MSBs) is being read, and which of the 16 bytes within the selected page (four LSBs) are being read. The FlashROM content can be read on a random basis; the access time is 10 ns for a device supporting commercial specifications. The FPGA core will be powered down during writing of the FlashROM content. FPGA power-down during FlashROM programming is managed on-chip, and FPGA core functionality is not available during programming of the FlashROM. Table 5-2 summarizes various FlashROM access scenarios.

***Table 5-2* • FlashROM Read/Write Capabilities by Access Mode**

| Access Mode | FlashROM Read | FlashROM Write |
|---|---|---|
| JTAG | Yes | Yes |
| UJTAG | Yes | No |
| FPGA core | Yes | No |

Figure 5-6 shows the accessing of the FlashROM using the UJTAG macro. This is similar to FPGA core access, where the 7-bit address defines which of the eight pages (three MSBs) is being read and which of the 16 bytes within the selected page (four LSBs) are being read. Refer to the "UJTAG Applications in Microsemi's Low Power Flash Devices" section on page 297 for details on using the UJTAG macro to read the FlashROM.

Figure 5-7 on page 123 and Figure 5-8 on page 123 show the FlashROM access from the JTAG port. The FlashROM content can be read on a random basis. The three-bit address defines which page is being read or updated.

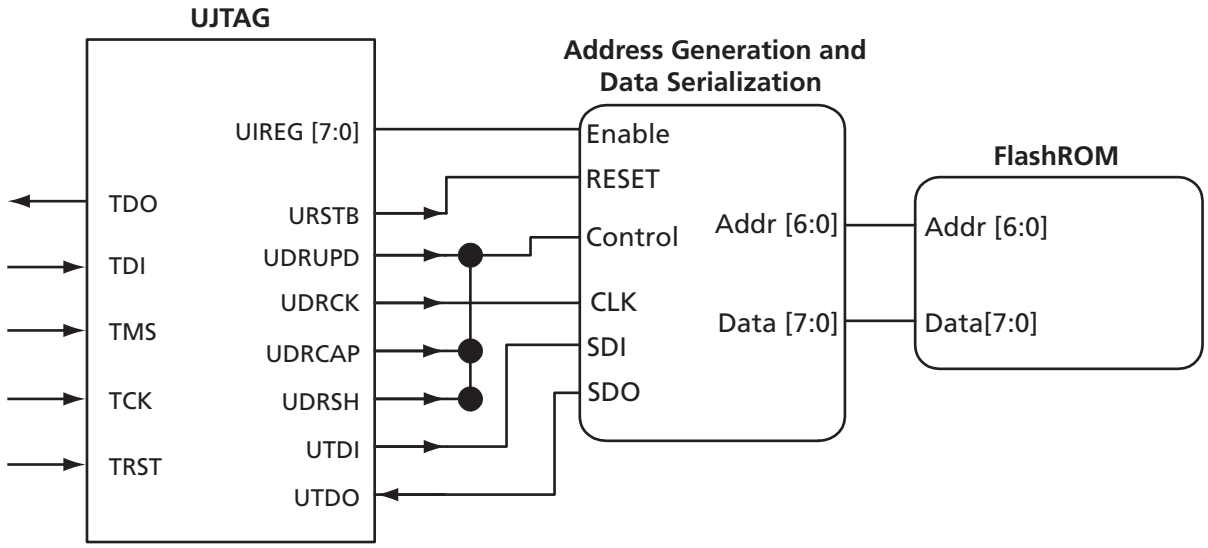


***Figure 5-6* • Block Diagram of Using UJTAG to Read FlashROM Contents**

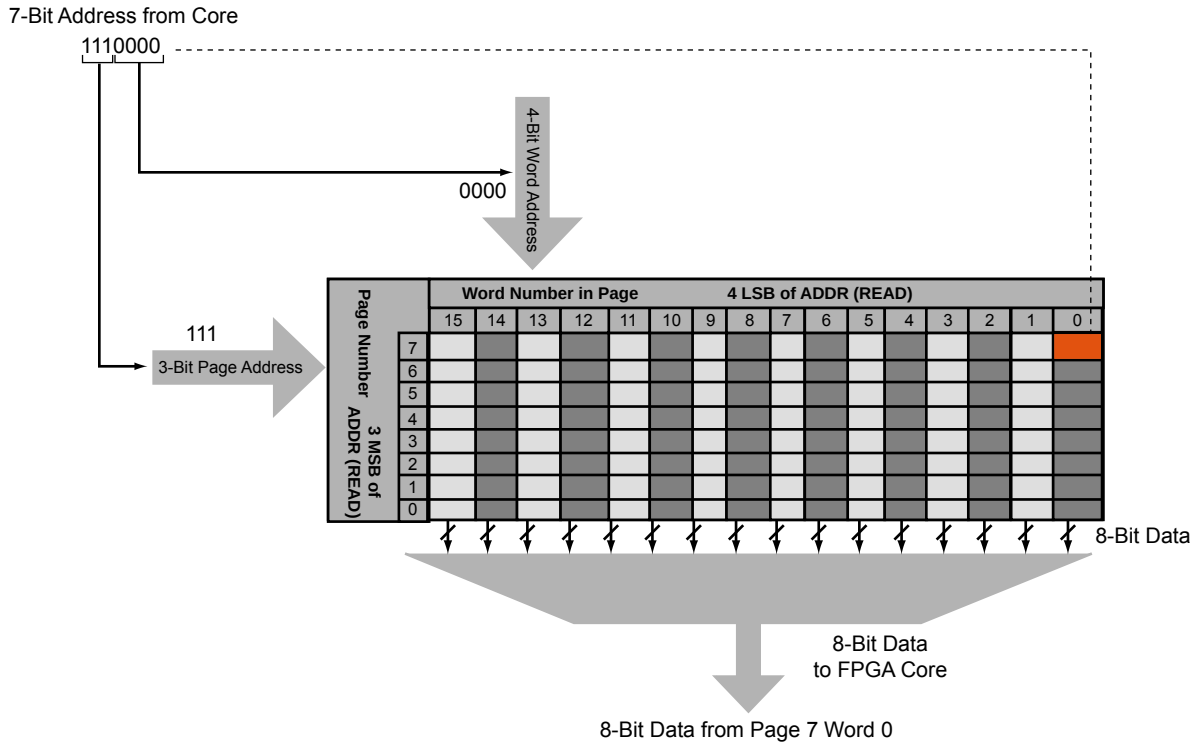


***Figure 5-7*** **• Accessing FlashROM Using FPGA Core**

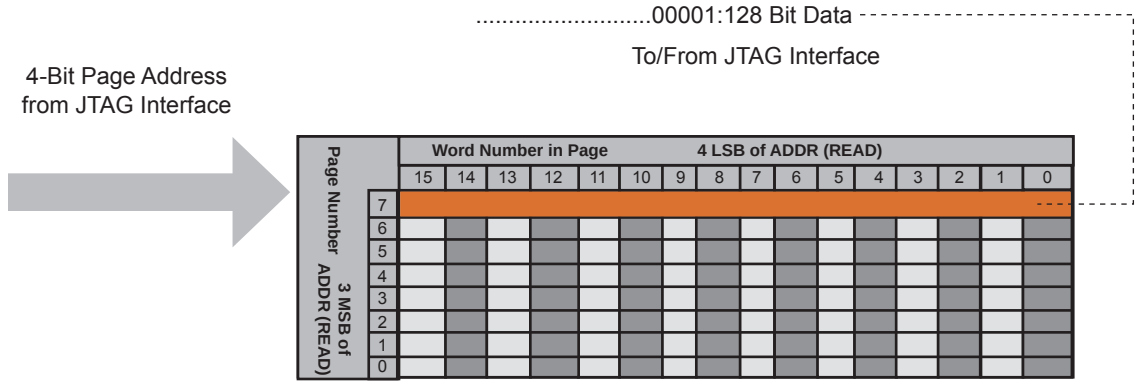


***Figure 5-8*** **• Accessing FlashROM Using JTAG Port**

# FlashROM Design Flow

The Microsemi Libero System-on-Chip (SoC) software has extensive FlashROM support, including FlashROM generation, instantiation, simulation, and programming. Figure 5-9 shows the user flow diagram. In the design flow, there are three main steps:

1. FlashROM generation and instantiation in the design
2. Simulation of FlashROM design
3. Programming file generation for FlashROM design

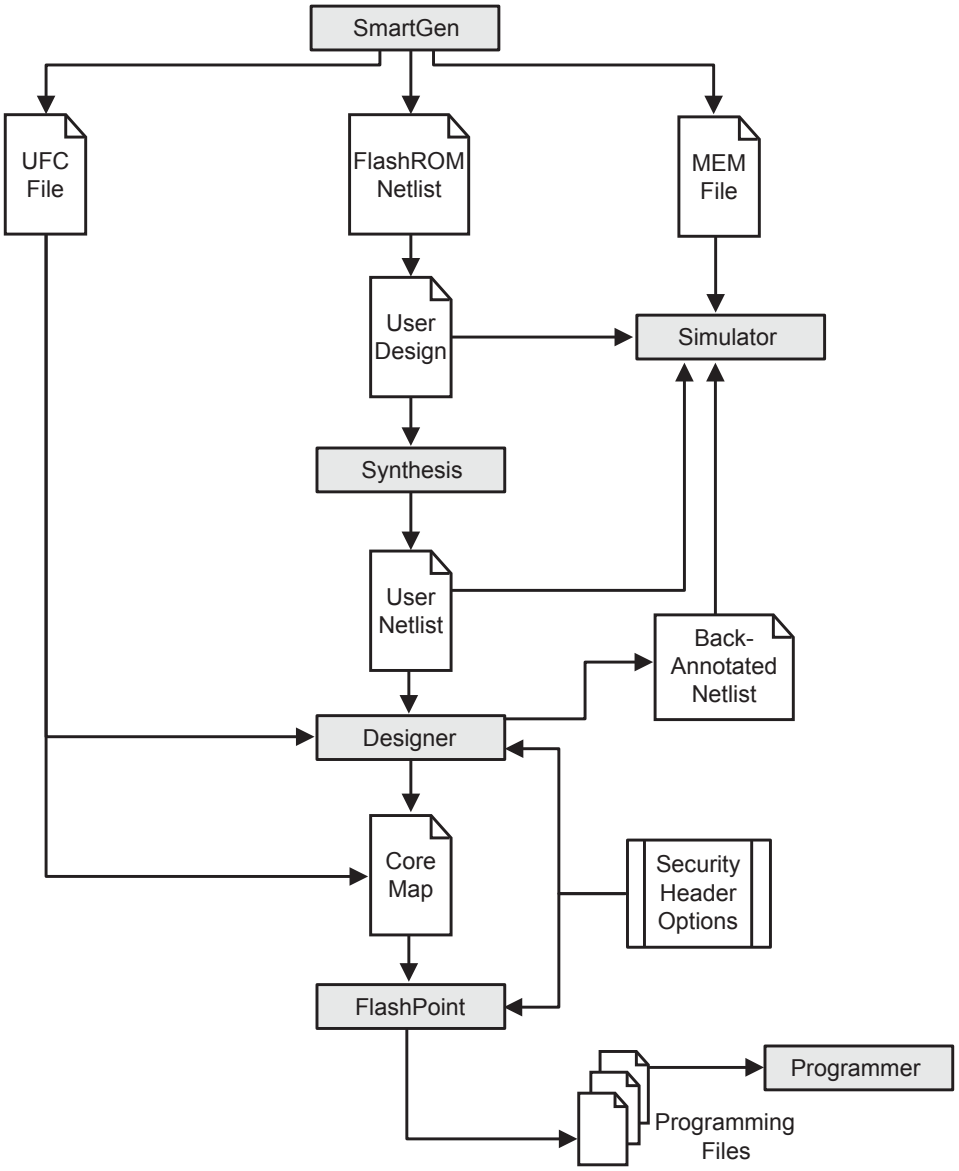


***Figure 5-9* • FlashROM Design Flow**

## FlashROM Generation and Instantiation in the Design

The SmartGen core generator, available in Libero SoC and Designer, is the only tool that can be used to generate the FlashROM content. SmartGen has several user-friendly features to help generate the FlashROM contents. Instead of selecting each byte and assigning values, you can create a region within a page, modify the region, and assign properties to that region. The FlashROM user interface, shown in Figure 5-10, includes the configuration grid, existing regions list, and properties field. The properties field specifies the region-specific information and defines the data used for that region. You can assign values to the following properties:

1. Static Fixed Data—Enables you to fix the data so it cannot be changed during programming time. This option is useful when you have fixed data stored in this region, which is required for the operation of the design in the FPGA. Key storage is one example.
2. Static Modifiable Data—Select this option when the data in a particular region is expected to be static data (such as a version number, which remains the same for a long duration but could conceivably change in the future). This option enables you to avoid changing the value every time you enter new data.
3. Read from File—This provides the full flexibility of FlashROM usage to the customer. If you have a customized algorithm for generating the FlashROM data, you can specify this setting. You can then generate a text file with data for as many devices as you wish to program, and load that into the FlashPoint programming file generation software to get programming files that include all the data. SmartGen will optionally pass the location of the file where the data is stored if the file is specified in SmartGen. Each text file has only one type of data format (binary, decimal, hex, or ASCII text). The length of each data file must be shorter than or equal to the selected region length. If the data is shorter than the selected region length, the most significant bits will be padded with 0s. For multiple text files for multiple regions, the first lines are for the first device. In SmartGen, **Load Sim. Value From File** allows you to load the first device data in the MEM file for simulation.
4. Auto Increment/Decrement—This scenario is useful when you specify the contents of FlashROM for a large number of devices in a series. You can specify the step value for the serial number and a maximum value for inventory control. During programming file generation, the actual number of devices to be programmed is specified and a start value is fed to the software.

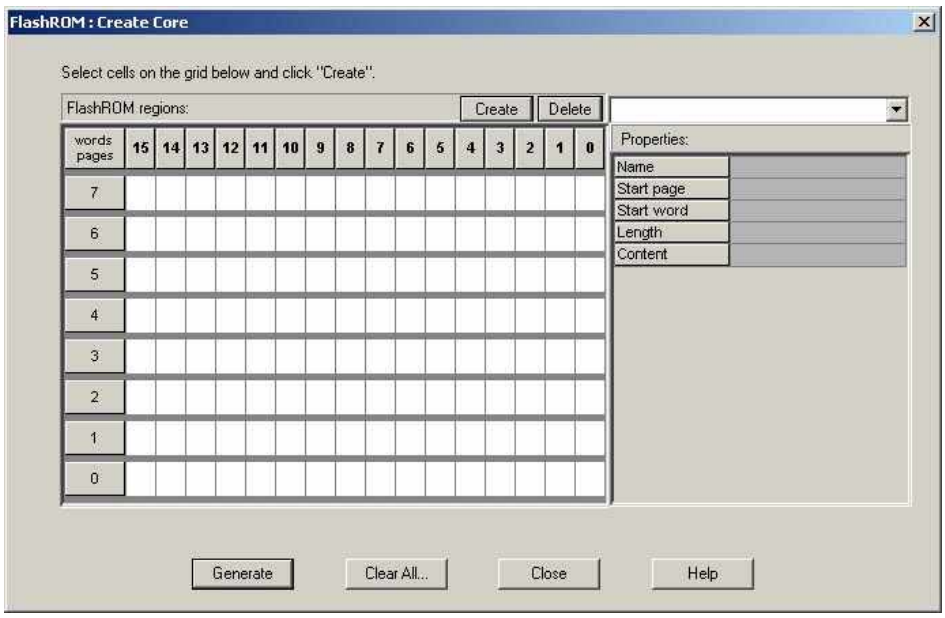


*Figure 5-10* • **SmartGen GUI of the FlashROM**

SmartGen allows you to generate the FlashROM netlist in VHDL, Verilog, or EDIF format. After the FlashROM netlist is generated, the core can be instantiated in the main design like other SmartGen cores. Note that the macro library name for FlashROM is UFROM. The following is a sample FlashROM VHDL netlist that can be instantiated in the main design:

```
library ieee;
use ieee.std_logic_1164.all;
library fusion;

entity FROM_a is
  port( ADDR : in std_logic_vector(6 downto 0); DOUT : out std_logic_vector(7 downto 0));
end FROM_a;

architecture DEF_ARCH of  FROM_a is

  component UFROM
    generic (MEMORYFILE:string);
    port(DO0, DO1, DO2, DO3, DO4, DO5, DO6, DO7 : out std_logic;
      ADDR0, ADDR1, ADDR2, ADDR3, ADDR4, ADDR5, ADDR6 : in std_logic := 'U') ;
  end component;

  component GND
    port( Y : out std_logic);
  end component;

signal U_7_PIN2 : std_logic ;

begin

  GND_1_net : GND port map(Y => U_7_PIN2);
  UFROM0 : UFROM
  generic map(MEMORYFILE => "FROM_a.mem")
  port map(DO0 => DOUT(0), DO1 => DOUT(1), DO2 => DOUT(2), DO3 => DOUT(3), DO4 => DOUT(4),
    DO5 => DOUT(5), DO6 => DOUT(6), DO7 => DOUT(7), ADDR0 => ADDR(0), ADDR1 => ADDR(1),
    ADDR2 => ADDR(2), ADDR3 => ADDR(3), ADDR4 => ADDR(4), ADDR5 => ADDR(5),
    ADDR6 => ADDR(6));

end DEF_ARCH;
```

SmartGen generates the following files along with the netlist. These are located in the SmartGen folder for the Libero SoC project.

1. MEM (Memory Initialization) file
2. UFC (User Flash Configuration) file
3. Log file

The MEM file is used for simulation, as explained in the "Simulation of FlashROM Design" section on page 127. The UFC file, generated by SmartGen, has the FlashROM configuration for single or multiple devices and is used during STAPL generation. It contains the region properties and simulation values. Note that any changes in the MEM file will not be reflected in the UFC file. Do not modify the UFC to change FlashROM content. Instead, use the SmartGen GUI to modify the FlashROM content. See the "Programming File Generation for FlashROM Design" section on page 127 for a description of how the UFC file is used during the programming file generation. The log file has information regarding the file type and file location.

## Simulation of FlashROM Design

The MEM file has 128 rows of 8 bits, each representing the contents of the FlashROM used for simulation. For example, the first row represents page 0, byte 0; the next row is page 0, byte 1; and so the pattern continues. Note that the three MSBs of the address define the page number, and the four LSBs define the byte number. So, if you send address 0000100 to FlashROM, this corresponds to the page 0 and byte 4 location, which is the fifth row in the MEM file. SmartGen defaults to 0s for any unspecified location of the FlashROM. Besides using the MEM file generated by SmartGen, you can create a binary file with 128 rows of 8 bits each and use this as a MEM file. Microsemi recommends that you use different file names if you plan to generate multiple MEM files. During simulation, Libero SoC passes the MEM file used as the generic file in the netlist, along with the design files and testbench. If you want to use different MEM files during simulation, you need to modify the generic file reference in the netlist.

```
……................
UFROM0: UFROM
--generic map(MEMORYFILE => "F:\Appsnotes\FROM\test_designs\testa\smartgen\FROM_a.mem")
--generic map(MEMORYFILE => "F:\Appsnotes\FROM\test_designs\testa\smartgen\FROM_b.mem")
……..................
```

The VITAL and Verilog simulation models accept the generics passed by the netlist, read the MEM file, and perform simulation with the data in the file.

## Programming File Generation for FlashROM Design

FlashPoint is the programming software used to generate the programming files for flash devices. Depending on the applications, you can use the FlashPoint software to generate a STAPL file with different FlashROM contents. In each case, optional AES decryption is available. To generate a STAPL file that contains the same FPGA core content and different FlashROM contents, the FlashPoint software needs an Array Map file for the core and UFC file(s) for the FlashROM. This final STAPL file represents the combination of the logic of the FPGA core and FlashROM content.

FlashPoint generates the STAPL files you can use to program the desired FlashROM page and/or FPGA core of the FPGA device contents. FlashPoint supports the encryption of the FlashROM content and/or FPGA Array configuration data. In the case of using the FlashROM for device serialization, a sequence of unique FlashROM contents will be generated. When generating a programming file with multiple unique FlashROM contents, you can specify in FlashPoint whether to include all FlashROM content in a single STAPL file or generate a different STAPL file for each FlashROM (Figure 5-11). The programming software (FlashPro) handles the single STAPL file that contains the FlashROM content from multiple devices. It enables you to program the FlashROM content into a series of devices sequentially (Figure 5-11). See the *FlashPro User's Guide* for information on serial programming.

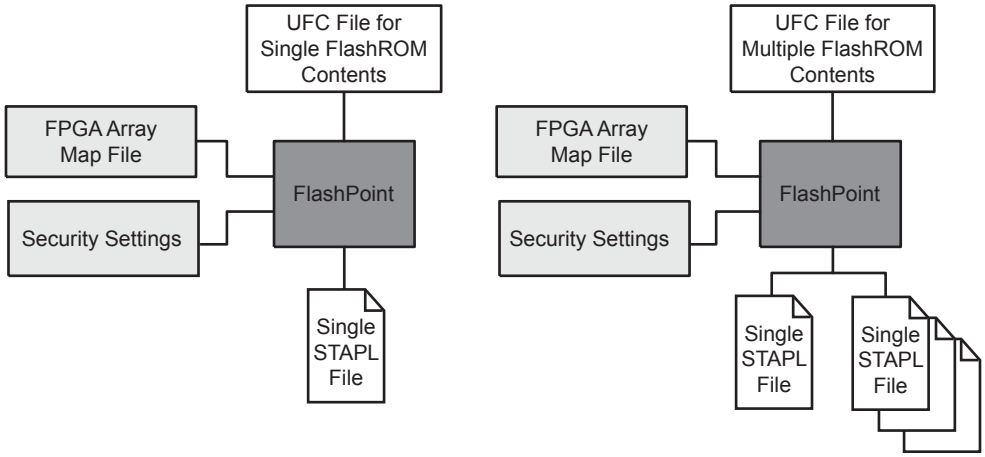


***Figure 5-11* • Single or Multiple Programming File Generation**

Figure 5-12 shows the programming file generator, which enables different STAPL file generation methods. When you select **Program FlashROM** and choose the UFC file, the FlashROM Settings window appears, as shown in Figure 5-13. In this window, you can select the FlashROM page you want to program and the data value for the configured regions. This enables you to use a different page for different programming files.

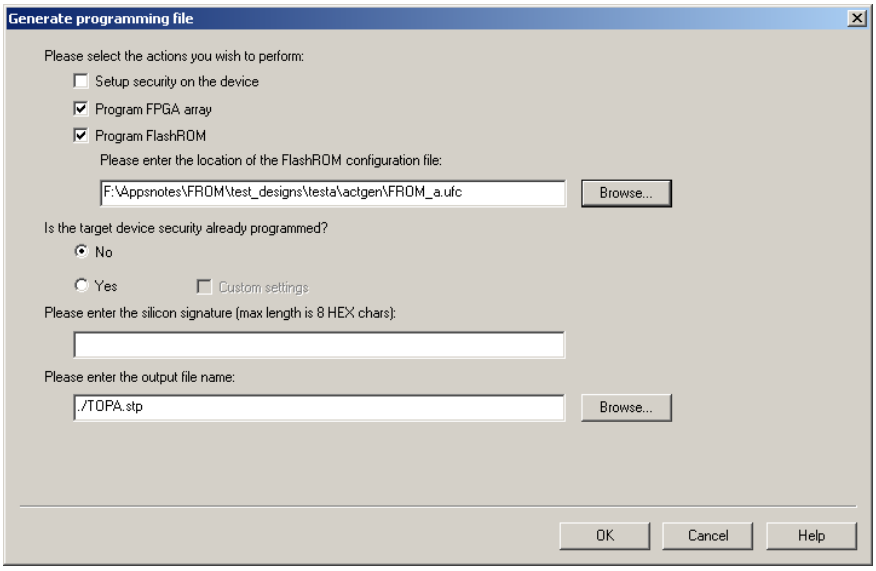


***Figure 5-12*** **• Programming File Generator**

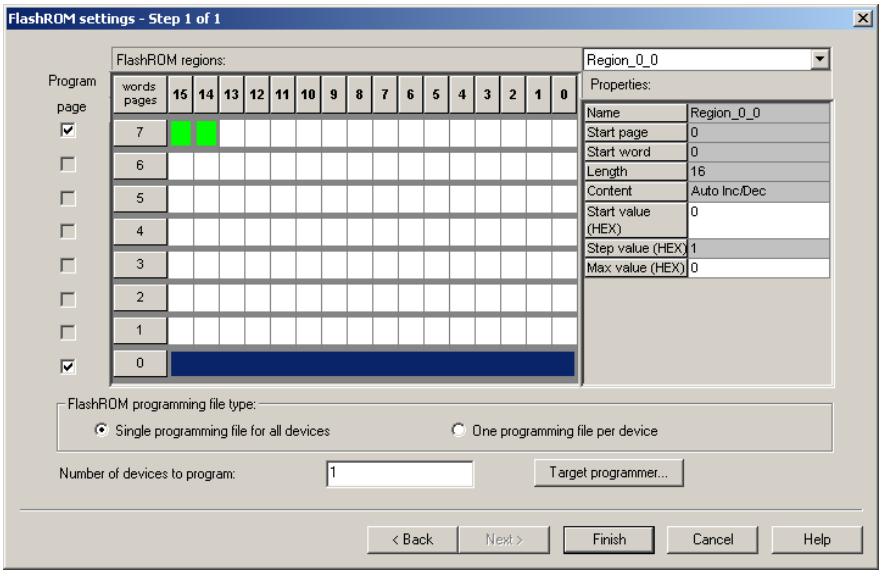


***Figure 5-13*** **• Setting FlashROM during Programming File Generation**

The programming hardware and software can load the FlashROM with the appropriate STAPL file. Programming software handles the single STAPL file that contains multiple FlashROM contents for multiple devices, and programs the FlashROM in sequential order (e.g., for device serialization). This feature is supported in the programming software. After programming with the STAPL file, you can run DEVICE_INFO to check the FlashROM content.

DEVICE_INFO displays the FlashROM content, serial number, Design Name, and checksum, as shown below:

```
EXPORT IDCODE[32] = 123261CF
EXPORT SILSIG[32] = 00000000
User information :
CHECKSUM: 61A0
Design Name:        TOP
Programming Method: STAPL
Algorithm Version: 1
Programmer: UNKNOWN
========================================
FlashROM Information :
EXPORT Region_7_0[128] = FFFFFFFFFFFFFFFFFFFFFFFFFFFFFFFF
========================================
Security Setting :
Encrypted FlashROM Programming Enabled.
Encrypted FPGA Array Programming Enabled.
========================================
```

The Libero SoC file manager recognizes the UFC and MEM files and displays them in the appropriate view. Libero SoC also recognizes the multiple programming files if you choose the option to generate multiple files for multiple FlashROM contents in Designer. These features enable a user-friendly flow for the FlashROM generation and programming in Libero SoC.

# Custom Serialization Using FlashROM

You can use FlashROM for device serialization or inventory control by using the Auto Inc region or Read From File region. FlashPoint will automatically generate the serial number sequence for the Auto Inc region with the **Start Value**, **Max Value**, and **Step Value** provided. If you have a unique serial number generation scheme that you prefer, the Read From File region allows you to import the file with your serial number scheme programmed into the region. See the *FlashPro User's Guide* for custom serialization file format information.

The following steps describe how to perform device serialization or inventory control using FlashROM:

1. Generate FlashROM using SmartGen. From the Properties section in the FlashROM Settings dialog box, select the **Auto Inc** or **Read From File** region. For the Auto Inc region, specify the desired step value. You will not be able to modify this value in the FlashPoint software.
2. Go through the regular design flow and finish place-and-route.
3. Select **Programming File in Designer** and open **Generate Programming File** (Figure 5-12 on page 128).
4. Click **Program FlashROM**, browse to the UFC file, and click **Next**. The FlashROM Settings window appears, as shown in Figure 5-13 on page 128.
5. Select the FlashROM page you want to program and the data value for the configured regions. The STAPL file generated will contain only the data that targets the selected FlashROM page.
6. Modify properties for the serialization.
   - For the Auto Inc region, specify the **Start** and **Max** values.
   - For the Read From File region, select the file name of the custom serialization file.
7. Select the FlashROM programming file type you want to generate from the two options below:
   - Single programming file for all devices: generates one programming file with all FlashROM values.
   - One programming file per device: generates a separate programming file for each FlashROM value.
8. Enter the number of devices you want to program and generate the required programming file.
9. Open the programming software and load the programming file. The programming software, FlashPro3 and Silicon Sculptor II, supports the device serialization feature. If, for some reason, the device fails to program a part during serialization, the software allows you to reuse or skip the serial data. Refer to the *FlashPro User's Guide* for details.

# Conclusion

The Fusion, IGLOO, and ProASIC3 families are the only FPGAs that offer on-chip FlashROM support. This document presents information on the FlashROM architecture, possible applications, programming, access through the JTAG and UJTAG interface, and integration into your design. In addition, the Libero tool set enables easy creation and modification of the FlashROM content.

The nonvolatile FlashROM block in the FPGA can be customized, enabling multiple applications.

Additionally, the security offered by the low power flash devices keeps both the contents of FlashROM and the FPGA design safe from system over-builders, system cloners, and IP thieves.

# Related Documents

## User's Guides

*FlashPro User's Guide*

http://www.microsemi.com/documents/FlashPro_UG.pdf

# List of Changes

The following table lists critical changes that were made in each revision of the chapter.

| Date | Changes | Page |
|---|---|---|
| July 2010 | This chapter is no longer published separately with its own part number and version but is now part of several FPGA fabric user's guides. | N/A |
| v1.4<br>(December 2008) | IGLOO nano and ProASIC3 nano devices were added to Table 5-1 • Flash-Based FPGAs. | 118 |
| v1.3<br>(October 2008) | The "FlashROM Support in Flash-Based Devices" section was revised to include new families and make the information more concise. | 118 |
| | Figure 5-2 • Fusion Device Architecture Overview (AFS600) was replaced. Figure 5-5 • Programming FlashROM Using AES was revised to change "Fusion" to "Flash Device." | 119, 121 |
| | The *FlashPoint User's Guide* was removed from the "User's Guides" section, as its content is now part of the *FlashPro User's Guide*. | 130 |
| v1.2<br>(June 2008) | The following changes were made to the family descriptions in Table 5-1 • Flash-Based FPGAs:<br>• ProASIC3L was updated to include 1.5 V.<br>• The number of PLLs for ProASIC3E was changed from five to six. | 118 |
| v1.1<br>(March 2008) | The chapter was updated to include the IGLOO PLUS family and information regarding 15 k gate devices. The "IGLOO Terminology" section and "ProASIC3 Terminology" section are new. | N/A |

# 6 – SRAM and FIFO Memories in Microsemi's Low Power Flash Devices

## Introduction

As design complexity grows, greater demands are placed upon an FPGA's embedded memory. Fusion, IGLOO, and ProASIC3 devices provide the flexibility of true dual-port and two-port SRAM blocks. The embedded memory, along with built-in, dedicated FIFO control logic, can be used to create cascading RAM blocks and FIFOs without using additional logic gates.

IGLOO, IGLOO PLUS, and ProASIC3L FPGAs contain an additional feature that allows the device to be put in a low power mode called Flash*Freeze. In this mode, the core draws minimal power (on the order of 2 to 127 µW) and still retains values on the embedded SRAM/FIFO and registers. Flash*Freeze technology allows the user to switch to Active mode on demand, thus simplifying power management and the use of SRAM/FIFOs.

## Device Architecture

The low power flash devices feature up to 504 kbits of RAM in 4,608-bit blocks (Figure 6-1 on page 132 and Figure 6-2 on page 133). The total embedded SRAM for each device can be found in the datasheets. These memory blocks are arranged along the top and bottom of the device to allow better access from the core and I/O (in some devices, they are only available on the north side of the device). Every RAM block has a flexible, hardwired, embedded FIFO controller, enabling the user to implement efficient FIFOs without sacrificing user gates.

In the IGLOO and ProASIC3 families of devices, the following memories are supported:

- 30 k gate devices and smaller do not support SRAM and FIFO.
- 60 k and 125 k gate devices support memories on the north side of the device only.
- 250 k devices and larger support memories on the north and south sides of the device.

In Fusion devices, the following memories are supported:

- AFS090 and AFS250 support memories on the north side of the device only.
- AFS600 and AFS1500 support memories on the north and south sides of the device.

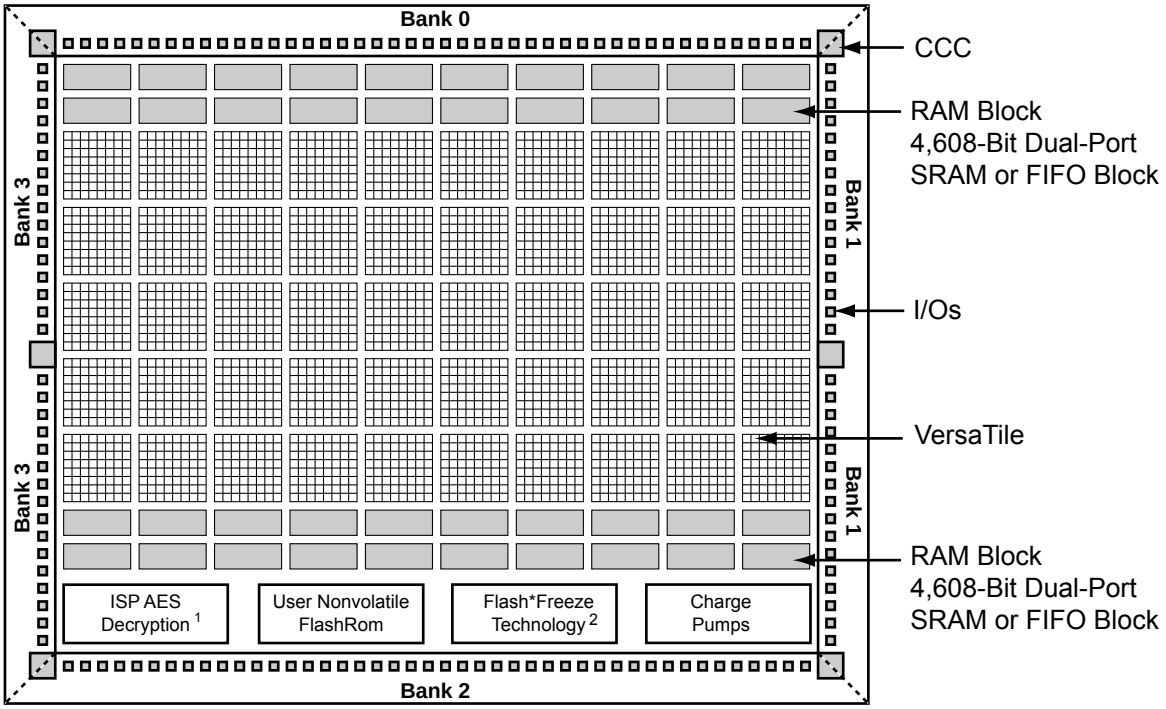


*Notes:*

1. *AES decryption not supported in 30 k gate devices and smaller.*
2. *Flash*Freeze is supported in all IGLOO devices and the ProASIC3L devices.*

***Figure 6-1*** **• IGLOO and ProASIC3 Device Architecture Overview**

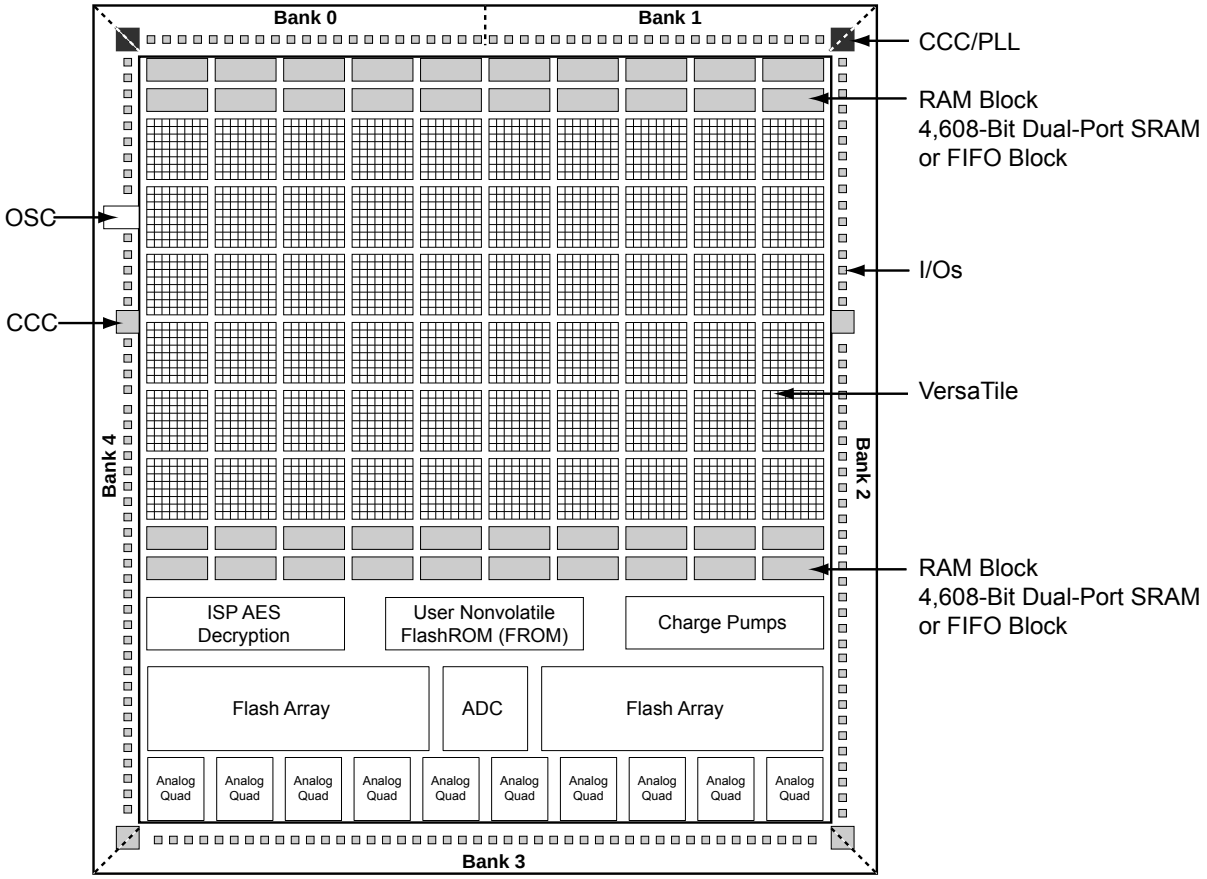


***Figure 6-2*** **• Fusion Device Architecture Overview (AFS600)**

# SRAM/FIFO Support in Flash-Based Devices

The flash FPGAs listed in Table 6-1 support SRAM and FIFO blocks and the functions described in this document.

***Table 6-1* • Flash-Based FPGAs**

| Series | Family* | Description |
|---|---|---|
| IGLOO | IGLOO | Ultra-low power 1.2 V to 1.5 V FPGAs with Flash*Freeze technology |
| | IGLOOe | Higher density IGLOO FPGAs with six PLLs and additional I/O standards |
| | IGLOO nano | The industry's lowest-power, smallest-size solution |
| | IGLOO PLUS | IGLOO FPGAs with enhanced I/O capabilities |
| ProASIC3 | ProASIC3 | Low power, high-performance 1.5 V FPGAs |
| | ProASIC3E | Higher density ProASIC3 FPGAs with six PLLs and additional I/O standards |
| | ProASIC3 nano | Lowest-cost solution with enhanced I/O capabilities |
| | ProASIC3L | ProASIC3 FPGAs supporting 1.2 V to 1.5 V with Flash*Freeze technology |
| | RT ProASIC3 | Radiation-tolerant RT3PE600L and RT3PE3000L |
| | Military ProASIC3/EL | Military temperature A3PE600L, A3P1000, and A3PE3000L |
| | Automotive ProASIC3 | ProASIC3 FPGAs qualified for automotive applications |
| Fusion | Fusion | Mixed signal FPGA integrating ProASIC3 FPGA fabric, programmable analog block, support for ARM® Cortex™-M1 soft processors, and flash memory into a monolithic device |

*Note: *The device names link to the appropriate datasheet, including product brief, DC and switching characteristics, and packaging information.*

## *IGLOO Terminology*

In documentation, the terms IGLOO series and IGLOO devices refer to all of the IGLOO devices as listed in Table 6-1. Where the information applies to only one product line or limited devices, these exclusions will be explicitly stated.

## *ProASIC3 Terminology*

In documentation, the terms ProASIC3 series and ProASIC3 devices refer to all of the ProASIC3 devices as listed in Table 6-1. Where the information applies to only one product line or limited devices, these exclusions will be explicitly stated.

To further understand the differences between the IGLOO and ProASIC3 devices, refer to the *Industry's Lowest Power FPGAs Portfolio*.

# SRAM and FIFO Architecture

To meet the needs of high-performance designs, the memory blocks operate strictly in synchronous mode for both read and write operations. The read and write clocks are completely independent, and each can operate at any desired frequency up to 250 MHz.

- 4k×1, 2k×2, 1k×4, 512×9 (dual-port RAM—2 read / 2 write or 1 read / 1 write)
- 512×9, 256×18 (2-port RAM—1 read / 1 write)
- Sync write, sync pipelined / nonpipelined read

Automotive ProASIC3 devices support single-port SRAM capabilities or dual-port SRAM only under specific conditions. Dual-port mode is supported if the clocks to the two SRAM ports are the same and 180° out of phase (i.e., the port A clock is the inverse of the port B clock). The Libero SoC software macro libraries support a dual-port macro only. For use of this macro as a single-port SRAM, the inputs and clock of one port should be tied off (grounded) to prevent errors during design compile. For use in dual-port mode, the same clock with an inversion between the two clock pins of the macro should be used in the design to prevent errors during compile.

The memory block includes dedicated FIFO control logic to generate internal addresses and external flag logic (FULL, EMPTY, AFULL, AEMPTY).

Simultaneous dual-port read/write and write/write operations at the same address are allowed when certain timing requirements are met.

During RAM operation, addresses are sourced by the user logic, and the FIFO controller is ignored. In FIFO mode, the internal addresses are generated by the FIFO controller and routed to the RAM array by internal MUXes.

The low power flash device architecture enables the read and write sizes of RAMs to be organized independently, allowing for bus conversion. For example, the write size can be set to 256×18 and the read size to 512×9.

Both the write width and read width for the RAM blocks can be specified independently with the WW (write width) and RW (read width) pins. The different D×W configurations are 256×18, 512×9, 1k×4, 2k×2, and 4k×1. When widths of one, two, or four are selected, the ninth bit is unused. For example, when writing nine-bit values and reading four-bit values, only the first four bits and the second four bits of each nine-bit value are addressable for read operations. The ninth bit is not accessible.

Conversely, when writing four-bit values and reading nine-bit values, the ninth bit of a read operation will be undefined. The RAM blocks employ little-endian byte order for read and write operations.

# Memory Blocks and Macros

Memory blocks can be configured with many different aspect ratios, but are generically supported in the macro libraries as one of two memory elements: RAM4K9 or RAM512X18. The RAM4K9 is configured as a true dual-port memory block, and the RAM512X18 is configured as a two-port memory block. Dual-port memory allows the RAM to both read from and write to either port independently. Two-port memory allows the RAM to read from one port and write to the other using a common clock or independent read and write clocks. If needed, the RAM4K9 blocks can be configured as two-port memory blocks. The memory block can be configured as a FIFO by combining the basic memory block with dedicated FIFO controller logic. The FIFO macro is named FIFO4KX18 (Figure 6-3 on page 136).

Clocks for the RAM blocks can be driven by the VersaNet (global resources) or by regular nets. When using local clock segments, the clock segment region that encompasses the RAM blocks can drive the RAMs. In the dual-port configuration (RAM4K9), each memory block port can be driven by either rising-edge or falling-edge clocks. Each port can be driven by clocks with different edges. Though only a rising-edge clock can drive the physical block itself, the Microsemi Designer software will automatically bubble-push the inversion to properly implement the falling-edge trigger for the RAM block.

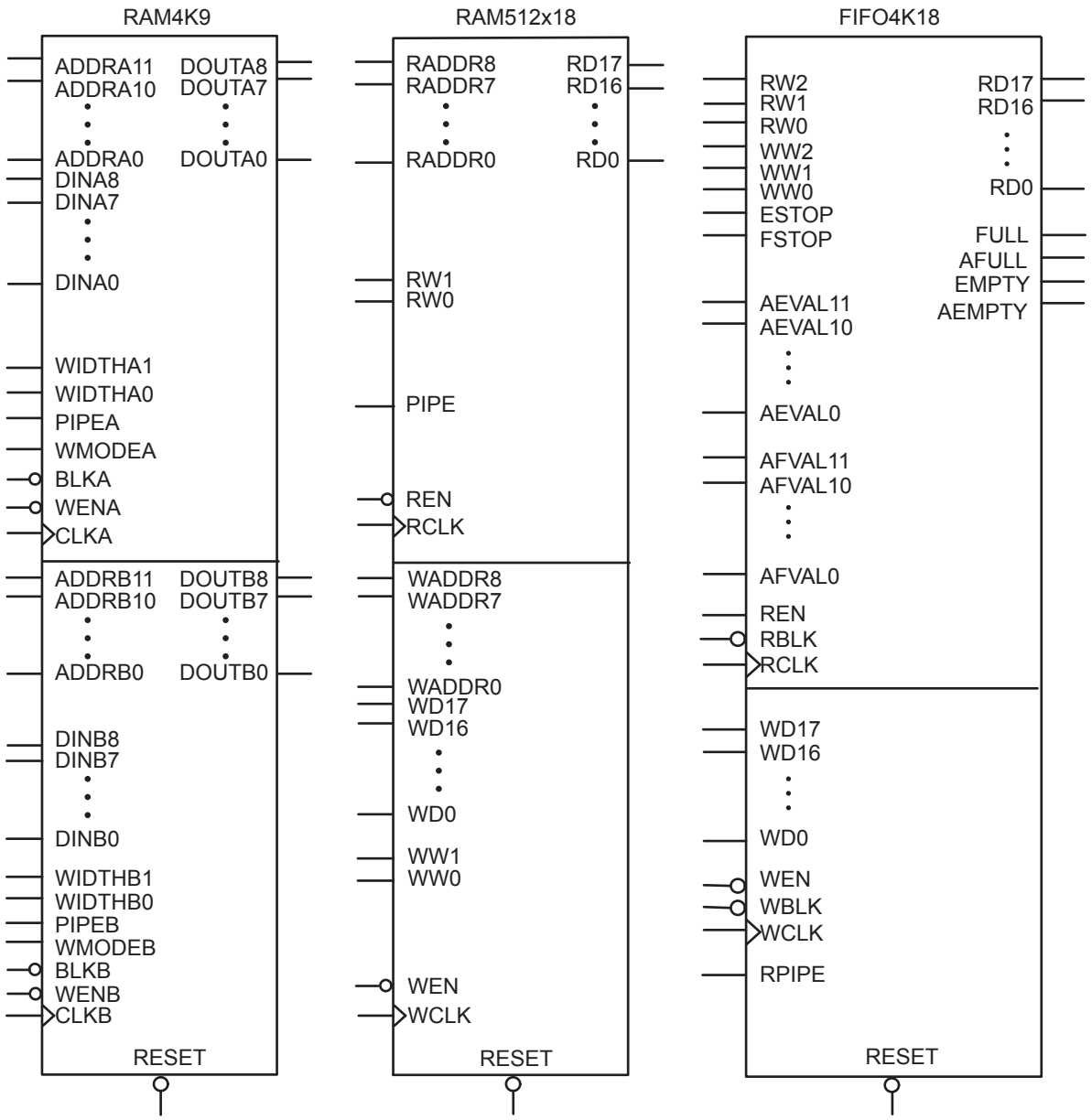


*Notes:*

1. *Automotive ProASIC3 devices restrict RAM4K9 to a single port or to dual ports with the same clock 180° out of phase (inverted) between clock pins. In single-port mode, inputs to port B should be tied to ground to prevent errors during compile. This warning applies only to automotive ProASIC3 parts of certain revisions and earlier. Contact Technical Support at soc_tech@microsemi.com for information on the revision number for a particular lot and date code.*
2. *For FIFO4K18, the same clock 180° out of phase (inverted) between clock pins should be used.*

***Figure 6-3* • Supported Basic RAM Macros**

## SRAM Features

### RAM4K9 Macro

RAM4K9 is the dual-port configuration of the RAM block (Figure 6-4). The RAM4K9 nomenclature refers to both the deepest possible configuration and the widest possible configuration the dual-port RAM block can assume, and does not denote a possible memory aspect ratio. The RAM block can be configured to the following aspect ratios: 4,096×1, 2,048×2, 1,024×4, and 512×9. RAM4K9 is fully synchronous and has the following features:

- Two ports that allow fully independent reads and writes at different frequencies
- Selectable pipelined or nonpipelined read
- Active-low block enables for each port
- Toggle control between read and write mode for each port
- Active-low asynchronous reset
- Pass-through write data or hold existing data on output. In pass-through mode, the data written to the write port will immediately appear on the read port.
- Designer software will automatically facilitate falling-edge clocks by bubble-pushing the inversion to previous stages.

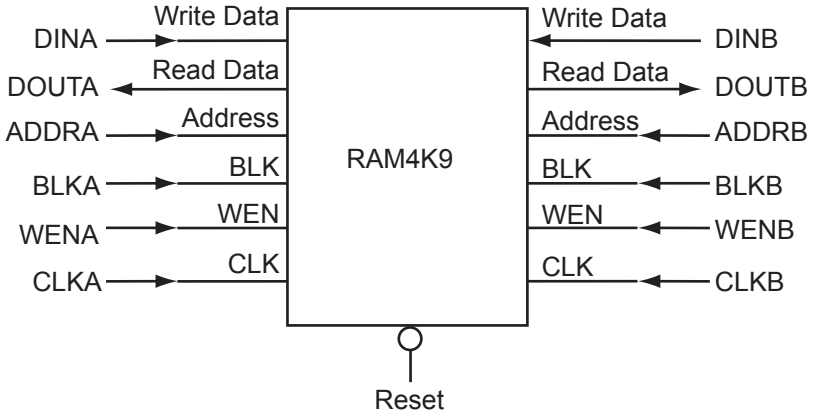


*Note: For timing diagrams of the RAM signals, refer to the appropriate family datasheet.*

***Figure 6-4* • RAM4K9 Simplified Configuration**

### Signal Descriptions for RAM4K9

**Note: Automotive ProASIC3 devices support single-port SRAM capabilities, or dual-port SRAM only under specific conditions. Dual-port mode is supported if the clocks to the two SRAM ports are the same and 180° out of phase (i.e., the port A clock is the inverse of the port B clock). Since Libero SoC macro libraries support a dual-port macro only, certain modifications must be made. These are detailed below.**

The following signals are used to configure the RAM4K9 memory element:

#### WIDTHA and WIDTHB

These signals enable the RAM to be configured in one of four allowable aspect ratios (Table 6-2 on page 138).

**Note: When using the SRAM in single-port mode for Automotive ProASIC3 devices, WIDTHB should be tied to ground.**

***Table 6-2* • Allowable Aspect Ratio Settings for WIDTHA[1:0]**

| WIDTHA[1:0] | WIDTHB[1:0] | D×W |
|---|---|---|
| 00 | 00 | 4k×1 |
| 01 | 01 | 2k×2 |
| 10 | 10 | 1k×4 |
| 11 | 11 | 512×9 |

*Note: The aspect ratio settings are constant and cannot be changed on the fly.*

### BLKA and BLKB

These signals are active-low and will enable the respective ports when asserted. When a BLKx signal is deasserted, that port's outputs hold the previous value.

**Note: When using the SRAM in single-port mode for Automotive ProASIC3 devices, BLKB should be tied to ground.**

### WENA and WENB

These signals switch the RAM between read and write modes for the respective ports. A LOW on these signals indicates a write operation, and a HIGH indicates a read.

**Note: When using the SRAM in single-port mode for Automotive ProASIC3 devices, WENB should be tied to ground.**

### CLKA and CLKB

These are the clock signals for the synchronous read and write operations. These can be driven independently or with the same driver.

**Note: For Automotive ProASIC3 devices, dual-port mode is supported if the clocks to the two SRAM ports are the same and 180° out of phase (i.e., the port A clock is the inverse of the port B clock). For use of this macro as a single-port SRAM, the inputs and clock of one port should be tied off (grounded) to prevent errors during design compile.**

### PIPEA and PIPEB

These signals are used to specify pipelined read on the output. A LOW on PIPEA or PIPEB indicates a nonpipelined read, and the data appears on the corresponding output in the same clock cycle. A HIGH indicates a pipelined read, and data appears on the corresponding output in the next clock cycle.

**Note: When using the SRAM in single-port mode for Automotive ProASIC3 devices, PIPEB should be tied to ground. For use in dual-port mode, the same clock with an inversion between the two clock pins of the macro should be used in the design to prevent errors during compile.**

### WMODEA and WMODEB

These signals are used to configure the behavior of the output when the RAM is in write mode. A LOW on these signals makes the output retain data from the previous read. A HIGH indicates pass-through behavior, wherein the data being written will appear immediately on the output. This signal is overridden when the RAM is being read.

**Note: When using the SRAM in single-port mode for Automotive ProASIC3 devices, WMODEB should be tied to ground.**

### RESET

This active-low signal resets the control logic, forces the output hold state registers to zero, disables reads and writes from the SRAM block, and clears the data hold registers when asserted. It does not reset the contents of the memory array.

While the RESET signal is active, read and write operations are disabled. As with any asynchronous reset signal, care must be taken not to assert it too close to the edges of active read and write clocks.

### ADDRA and ADDRB

These are used as read or write addresses, and they are 12 bits wide. When a depth of less than 4 k is specified, the unused high-order bits must be grounded (Table 6-3 on page 139).

**Note: When using the SRAM in single-port mode for Automotive ProASIC3 devices, ADDRB should be tied to ground.**

***Table 6-3* • Address Pins Unused/Used for Various Supported Bus Widths**

| D×W | ADDRx | |
|---|---|---|
| | Unused | Used |
| 4k×1 | None | [11:0] |
| 2k×2 | [11] | [10:0] |
| 1k×4 | [11:10] | [9:0] |
| 512×9 | [11:9] | [8:0] |

*Note: The "x" in ADDRx implies A or B.*

### DINA and DINB

These are the input data signals, and they are nine bits wide. Not all nine bits are valid in all configurations. When a data width less than nine is specified, unused high-order signals must be grounded (Table 6-4).

**Note: When using the SRAM in single-port mode for Automotive ProASIC3 devices, DINB should be tied to ground.**

### DOUTA and DOUTB

These are the nine-bit output data signals. Not all nine bits are valid in all configurations. As with DINA and DINB, high-order bits may not be used (Table 6-4). The output data on unused pins is undefined.

***Table 6-4* • Unused/Used Input and Output Data Pins for Various Supported Bus Widths**

| D×W | DINx/DOUTx | |
|---|---|---|
| | Unused | Used |
| 4k×1 | [8:1] | [0] |
| 2k×2 | [8:2] | [1:0] |
| 1k×4 | [8:4] | [3:0] |
| 512×9 | None | [8:0] |

*Note: The "x" in DINx or DOUTx implies A or B.*

## *RAM512X18 Macro*

RAM512X18 is the two-port configuration of the same RAM block (Figure 6-5 on page 140). Like the RAM4K9 nomenclature, the RAM512X18 nomenclature refers to both the deepest possible configuration and the widest possible configuration the two-port RAM block can assume. In two-port mode, the RAM block can be configured to either the 512×9 aspect ratio or the 256×18 aspect ratio. RAM512X18 is also fully synchronous and has the following features:

- Dedicated read and write ports
- Active-low read and write enables
- Selectable pipelined or nonpipelined read
- Active-low asynchronous reset
- Designer software will automatically facilitate falling-edge clocks by bubble-pushing the inversion to previous stages.

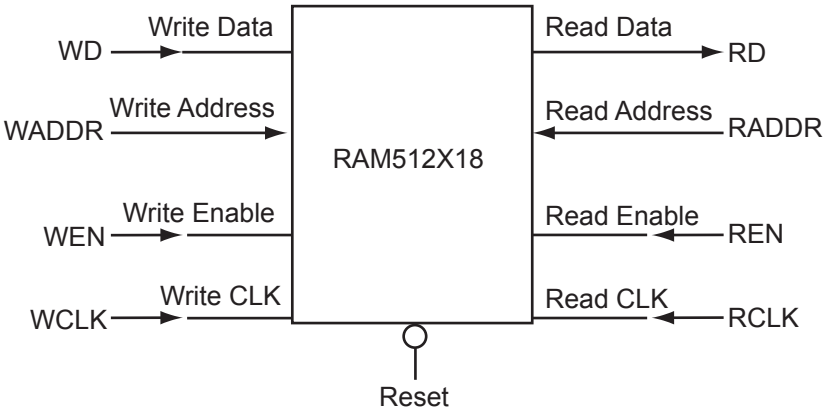


*Note: For timing diagrams of the RAM signals, refer to the appropriate family datasheet.*

***Figure 6-5* • 512X18 Two-Port RAM Block Diagram**

## *Signal Descriptions for RAM512X18*

RAM512X18 has slightly different behavior from RAM4K9, as it has dedicated read and write ports.

### WW and RW

These signals enable the RAM to be configured in one of the two allowable aspect ratios (Table 6-5).

***Table 6-5* • Aspect Ratio Settings for WW[1:0]**

| WW[1:0] | RW[1:0] | D×W |
|---|---|---|
| 01 | 01 | 512×9 |
| 10 | 10 | 256×18 |
| 00, 11 | 00, 11 | Reserved |

### WD and RD

These are the input and output data signals, and they are 18 bits wide. When a 512×9 aspect ratio is used for write, WD[17:9] are unused and must be grounded. If this aspect ratio is used for read, RD[17:9] are undefined.

### WADDR and RADDR

These are read and write addresses, and they are nine bits wide. When the 256×18 aspect ratio is used for write or read, WADDR[8] and RADDR[8] are unused and must be grounded.

### WCLK and RCLK

These signals are the write and read clocks, respectively. They can be clocked on the rising or falling edge of WCLK and RCLK.

### WEN and REN

These signals are the write and read enables, respectively. They are both active-low by default. These signals can be configured as active-high.

### RESET

This active-low signal resets the control logic, forces the output hold state registers to zero, disables reads and writes from the SRAM block, and clears the data hold registers when asserted. It does not reset the contents of the memory array.

While the RESET signal is active, read and write operations are disabled. As with any asynchronous reset signal, care must be taken not to assert it too close to the edges of active read and write clocks.

### PIPE

This signal is used to specify pipelined read on the output. A LOW on PIPE indicates a nonpipelined read, and the data appears on the output in the same clock cycle. A HIGH indicates a pipelined read, and data appears on the output in the next clock cycle.

### SRAM Usage

The following descriptions refer to the usage of both RAM4K9 and RAM512X18.

#### Clocking

The dual-port SRAM blocks are only clocked on the rising edge. SmartGen allows falling-edge-triggered clocks by adding inverters to the netlist, hence achieving dual-port SRAM blocks that are clocked on either edge (rising or falling). For dual-port SRAM, each port can be clocked on either edge and by separate clocks by port. Note that for Automotive ProASIC3, the same clock, with an inversion between the two clock pins of the macro, should be used in design to prevent errors during compile.

Low power flash devices support inversion (bubble-pushing) throughout the FPGA architecture, including the clock input to the SRAM modules. Inversions added to the SRAM clock pin on the design schematic or in the HDL code will be automatically accounted for during design compile without incurring additional delay in the clock path.

The two-port SRAM can be clocked on the rising or falling edge of WCLK and RCLK.

If negative-edge RAM and FIFO clocking is selected for memory macros, clock edge inversion management (bubble-pushing) is automatically used within the development tools, without performance penalty.

#### Modes of Operation

There are two read modes and one write mode:

- Read Nonpipelined (synchronous—1 clock edge): In the standard read mode, new data is driven onto the RD bus in the same clock cycle following RA and REN valid. The read address is registered on the read port clock active edge, and data appears at RD after the RAM access time. Setting PIPE to OFF enables this mode.
- Read Pipelined (synchronous—2 clock edges): The pipelined mode incurs an additional clock delay from address to data but enables operation at a much higher frequency. The read address is registered on the read port active clock edge, and the read data is registered and appears at RD after the second read clock edge. Setting PIPE to ON enables this mode.
- Write (synchronous—1 clock edge): On the write clock active edge, the write data is written into the SRAM at the write address when WEN is HIGH. The setup times of the write address, write enables, and write data are minimal with respect to the write clock.

#### RAM Initialization

Each SRAM block can be individually initialized on power-up by means of the JTAG port using the UJTAG mechanism. The shift register for a target block can be selected and loaded with the proper bit configuration to enable serial loading. The 4,608 bits of data can be loaded in a single operation.

## FIFO Features

The FIFO4KX18 macro is created by merging the RAM block with dedicated FIFO logic (Figure 6-6 on page 142). Since the FIFO logic can only be used in conjunction with the memory block, there is no separate FIFO controller macro. As with the RAM blocks, the FIFO4KX18 nomenclature does not refer to a possible aspect ratio, but rather to the deepest possible data depth and the widest possible data width. FIFO4KX18 can be configured into the following aspect ratios: 4,096×1, 2,048×2, 1,024×4, 512×9, and 256×18. In addition to being fully synchronous, the FIFO4KX18 also has the following features:

- Four FIFO flags: Empty, Full, Almost-Empty, and Almost-Full
- Empty flag is synchronized to the read clock
- Full flag is synchronized to the write clock
- Both Almost-Empty and Almost-Full flags have programmable thresholds
- Active-low asynchronous reset
- Active-low block enable
- Active-low write enable
- Active-high read enable
- Ability to configure the FIFO to either stop counting after the empty or full states are reached or to allow the FIFO counters to continue

- Designer software will automatically facilitate falling-edge clocks by bubble-pushing the inversion to previous stages.

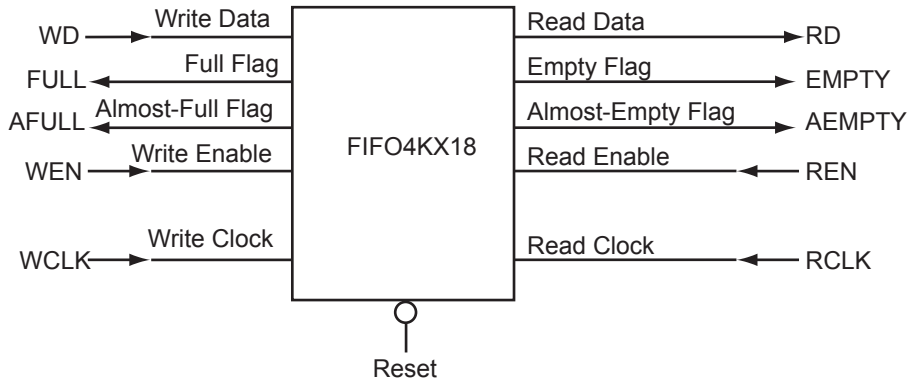


***Figure 6-6* • FIFO4KX18 Block Diagram**

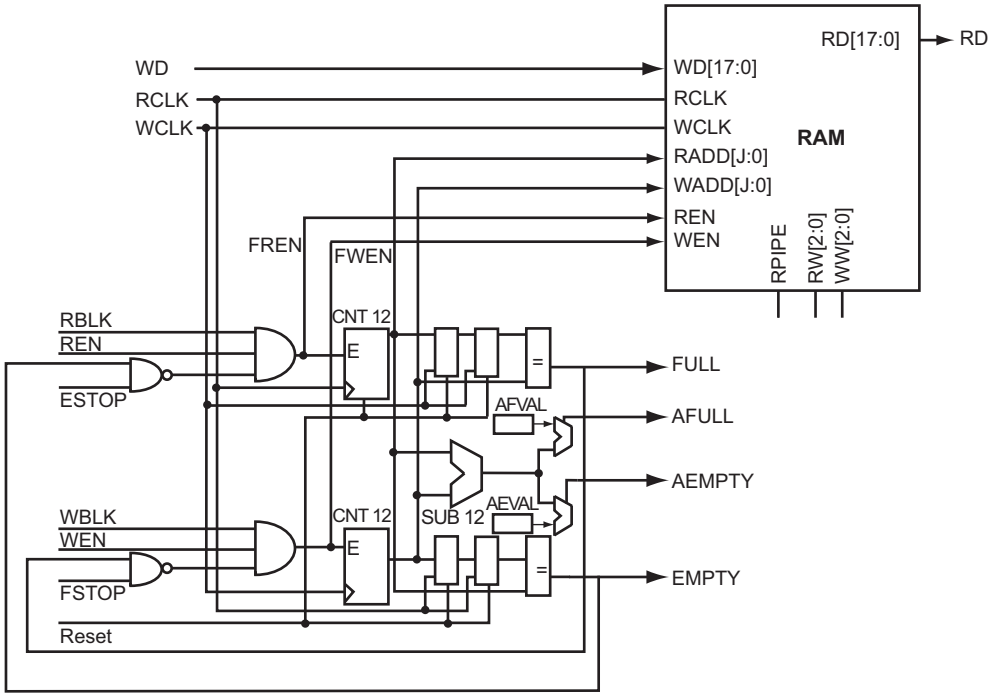


***Figure 6-7* • RAM Block with Embedded FIFO Controller**

The FIFOs maintain a separate read and write address. Whenever the difference between the write address and the read address is greater than or equal to the almost-full value (AFVAL), the Almost-Full flag is asserted. Similarly, the Almost-Empty flag is asserted whenever the difference between the write address and read address is less than or equal to the almost-empty value (AEVAL).

Due to synchronization between the read and write clocks, the Empty flag will deassert after the second read clock edge from the point that the write enable asserts. However, since the Empty flag is synchronized to the read clock, it will assert after the read clock reads the last data in the FIFO. Also, since the Full flag is dependent on the actual hardware configuration, it will assert when the actual physical implementation of the FIFO is full.

For example, when a user configures a 128×18 FIFO, the actual physical implementation will be a 256×18 FIFO element. Since the actual implementation is 256×18, the Full flag will not trigger until the

256×18 FIFO is full, even though a 128×18 FIFO was requested. For this example, the Almost-Full flag can be used instead of the Full flag to signal when the 128th data word is reached.

To accommodate different aspect ratios, the almost-full and almost-empty values are expressed in terms of data bits instead of data words. SmartGen translates the user's input, expressed in data words, into data bits internally. SmartGen allows the user to select the thresholds for the Almost-Empty and Almost-Full flags in terms of either the read data words or the write data words, and makes the appropriate conversions for each flag.

After the empty or full states are reached, the FIFO can be configured so the FIFO counters either stop or continue counting. For timing numbers, refer to the appropriate family datasheet.

## *Signal Descriptions for FIFO4K18*

The following signals are used to configure the FIFO4K18 memory element:

### WW and RW

These signals enable the FIFO to be configured in one of the five allowable aspect ratios (Table 6-6).

***Table 6-6* • Aspect Ratio Settings for WW[2:0]**

| WW[2:0] | RW[2:0] | D×W |
|---|---|---|
| 000 | 000 | 4k×1 |
| 001 | 001 | 2k×2 |
| 010 | 010 | 1k×4 |
| 011 | 011 | 512×9 |
| 100 | 100 | 256×18 |
| 101, 110, 111 | 101, 110, 111 | Reserved |

### WBLK and RBLK

These signals are active-low and will enable the respective ports when LOW. When the RBLK signal is HIGH, that port's outputs hold the previous value.

### WEN and REN

Read and write enables. WEN is active-low and REN is active-high by default. These signals can be configured as active-high or -low.

### WCLK and RCLK

These are the clock signals for the synchronous read and write operations. These can be driven independently or with the same driver.

**Note: For the Automotive ProASIC3 FIFO4K18, for the same clock, 180° out of phase (inverted) between clock pins should be used.**

### RPIPE

This signal is used to specify pipelined read on the output. A LOW on RPIPE indicates a nonpipelined read, and the data appears on the output in the same clock cycle. A HIGH indicates a pipelined read, and data appears on the output in the next clock cycle.

### RESET

This active-low signal resets the control logic and forces the output hold state registers to zero when asserted. It does not reset the contents of the memory array (Table 6-7 on page 144).

While the RESET signal is active, read and write operations are disabled. As with any asynchronous RESET signal, care must be taken not to assert it too close to the edges of active read and write clocks.

### WD

This is the input data bus and is 18 bits wide. Not all 18 bits are valid in all configurations. When a data width less than 18 is specified, unused higher-order signals must be grounded (Table 6-7 on page 144).

### RD

This is the output data bus and is 18 bits wide. Not all 18 bits are valid in all configurations. Like the WD bus, high-order bits become unusable if the data width is less than 18. The output data on unused pins is undefined (Table 6-7).

***Table 6-7* • Input Data Signal Usage for Different Aspect Ratios**

| D×W | WD/RD Unused |
|---|---|
| 4k×1 | WD[17:1], RD[17:1] |
| 2k×2 | WD[17:2], RD[17:2] |
| 1k×4 | WD[17:4], RD[17:4] |
| 512×9 | WD[17:9], RD[17:9] |
| 256×18 | – |

### ESTOP, FSTOP

ESTOP is used to stop the FIFO read counter from further counting once the FIFO is empty (i.e., the EMPTY flag goes HIGH). A HIGH on this signal inhibits the counting.

FSTOP is used to stop the FIFO write counter from further counting once the FIFO is full (i.e., the FULL flag goes HIGH). A HIGH on this signal inhibits the counting.

For more information on these signals, refer to the "ESTOP and FSTOP Usage" section.

### FULL, EMPTY

When the FIFO is full and no more data can be written, the FULL flag asserts HIGH. The FULL flag is synchronous to WCLK to inhibit writing immediately upon detection of a full condition and to prevent overflows. Since the write address is compared to a resynchronized (and thus time-delayed) version of the read address, the FULL flag will remain asserted until two WCLK active edges after a read operation eliminates the full condition.

When the FIFO is empty and no more data can be read, the EMPTY flag asserts HIGH. The EMPTY flag is synchronous to RCLK to inhibit reading immediately upon detection of an empty condition and to prevent underflows. Since the read address is compared to a resynchronized (and thus time-delayed) version of the write address, the EMPTY flag will remain asserted until two RCLK active edges after a write operation removes the empty condition.

For more information on these signals, refer to the "FIFO Flag Usage Considerations" section on page 145.

### AFULL, AEMPTY

These are programmable flags and will be asserted on the threshold specified by AFVAL and AEVAL, respectively.

When the number of words stored in the FIFO reaches the amount specified by AEVAL while reading, the AEMPTY output will go HIGH. Likewise, when the number of words stored in the FIFO reaches the amount specified by AFVAL while writing, the AFULL output will go HIGH.

### AFVAL, AEVAL

The AEVAL and AFVAL pins are used to specify the almost-empty and almost-full threshold values. They are 12-bit signals. For more information on these signals, refer to the "FIFO Flag Usage Considerations" section on page 145.

## *FIFO Usage*

### ESTOP and FSTOP Usage

The ESTOP pin is used to stop the read counter from counting any further once the FIFO is empty (i.e., the EMPTY flag goes HIGH). Likewise, the FSTOP pin is used to stop the write counter from counting any further once the FIFO is full (i.e., the FULL flag goes HIGH).

The FIFO counters in the device start the count at zero, reach the maximum depth for the configuration (e.g., 511 for a 512×9 configuration), and then restart at zero. An example application for ESTOP, where the read counter keeps counting, would be writing to the FIFO once and reading the same content over and over without doing another write.

### FIFO Flag Usage Considerations

The AEVAL and AFVAL pins are used to specify the 12-bit AEMPTY and AFULL threshold values. The FIFO contains separate 12-bit write address (WADDR) and read address (RADDR) counters. WADDR is incremented every time a write operation is performed, and RADDR is incremented every time a read operation is performed. Whenever the difference between WADDR and RADDR is greater than or equal to AFVAL, the AFULL output is asserted. Likewise, whenever the difference between WADDR and RADDR is less than or equal to AEVAL, the AEMPTY output is asserted. To handle different read and write aspect ratios, AFVAL and AEVAL are expressed in terms of total data bits instead of total data words. When users specify AFVAL and AEVAL in terms of read or write words, the SmartGen tool translates them into bit addresses and configures these signals automatically. SmartGen configures the AFULL flag to assert when the write address exceeds the read address by at least a predefined value. In a 2k×8 FIFO, for example, a value of 1,500 for AFVAL means that the AFULL flag will be asserted after a write when the difference between the write address and the read address reaches 1,500 (there have been at least 1,500 more writes than reads). It will stay asserted until the difference between the write and read addresses drops below 1,500.

The AEMPTY flag is asserted when the difference between the write address and the read address is less than a predefined value. In the example above, a value of 200 for AEVAL means that the AEMPTY flag will be asserted when a read causes the difference between the write address and the read address to drop to 200. It will stay asserted until that difference rises above 200. Note that the FIFO can be configured with different read and write widths; in this case, the AFVAL setting is based on the number of write data entries, and the AEVAL setting is based on the number of read data entries. For aspect ratios of 512×9 and 256×18, only 4,096 bits can be addressed by the 12 bits of AFVAL and AEVAL. The number of words must be multiplied by 8 and 16 instead of 9 and 18. The SmartGen tool automatically uses the proper values. To avoid halfwords being written or read, which could happen if different read and write aspect ratios were specified, the FIFO will assert FULL or EMPTY as soon as at least one word cannot be written or read. For example, if a two-bit word is written and a four-bit word is being read, the FIFO will remain in the empty state when the first word is written. This occurs even if the FIFO is not completely empty, because in this case, a complete word cannot be read. The same is applicable in the full state. If a four-bit word is written and a two-bit word is read, the FIFO is full and one word is read. The FULL flag will remain asserted because a complete word cannot be written at this point.

## Variable Aspect Ratio and Cascading

Variable aspect ratio and cascading allow users to configure the memory in the width and depth required. The memory block can be configured as a FIFO by combining the basic memory block with dedicated FIFO controller logic. The FIFO macro is named FIFO4KX18. Low power flash device RAM can be configured as 1, 2, 4, 9, or 18 bits wide. By cascading the memory blocks, any multiple of those widths can be created. The RAM blocks can be from 256 to 4,096 bits deep, depending on the aspect ratio, and the blocks can also be cascaded to create deeper areas. Refer to the aspect ratios available for each macro cell in the "SRAM Features" section on page 137. The largest continuous configurable memory area is equal to half the total memory available on the device, because the RAM is separated into two groups, one on each side of the device.

The SmartGen core generator will automatically configure and cascade both RAM and FIFO blocks. Cascading is accomplished using dedicated memory logic and does not consume user gates for depths up to 4,096 bits deep and widths up to 18, depending on the configuration. Deeper memory will utilize some user gates to multiplex the outputs.

Generated RAM and FIFO macros can be created as either structural VHDL or Verilog for easy instantiation into the design. Users of Libero SoC can create a symbol for the macro and incorporate it into a design schematic.

Table 6-10 on page 147 shows the number of memory blocks required for each of the supported depth and width memory configurations, and for each depth and width combination. For example, a 256-bit deep by 32-bit wide two-port RAM would consist of two 256×18 RAM blocks. The first 18 bits would be stored in the first RAM block, and the remaining 14 bits would be implemented in the other 256×18 RAM block. This second RAM block would have four bits of unused storage. Similarly, a dual-port memory block that is 8,192 bits deep and 8 bits wide would be implemented using 16 memory blocks. The dual-port memory would be configured in a 4,096×1 aspect ratio. These blocks would then be cascaded two deep to achieve 8,192 bits of depth, and eight wide to achieve the eight bits of width.

Table 6-8 and Table 6-9 show the maximum potential width and depth configuration for each device. Note that 15 k and 30 k gate devices do not support RAM or FIFO.

***Table 6-8* • Memory Availability per IGLOO and ProASIC3 Device**

| Device | | RAM Blocks | Maximum Potential Width[1] | | Maximum Potential Depth[2] | |
|---|---|---|---|---|---|---|
| IGLOO<br>IGLOO nano<br>IGLOO PLUS | ProASIC3<br>ProASIC3 nano<br>ProASIC3L | | Depth | Width | Depth | Width |
| AGL060<br>AGLN060<br>AGLP060 | A3P060<br>A3PN060 | 4 | 256 | 72 (4×18) | 16,384 (4,096×4) | 1 |
| AGL125<br>AGLN125<br>AGLP125 | A3P125<br>A3PN125 | 8 | 256 | 144 (8×18) | 32,768 (4,094×8) | 1 |
| AGL250<br>AGLN250 | A3P250/L<br>A3PN250 | 8 | 256 | 144 (8×18) | 32,768 (4,096×8) | 1 |
| AGL400 | A3P400 | 12 | 256 | 216 (12×18) | 49,152 (4,096×12) | 1 |
| AGL600 | A3P600/L | 24 | 256 | 432 (24×18) | 98,304 (4,096×24) | 1 |
| AGL1000 | A3P1000/L | 32 | 256 | 576 (32×18) | 131,072 (4,096×32) | 1 |
| AGLE600 | A3PE600 | 24 | 256 | 432 (24×18) | 98,304 (4,096×24) | 1 |
| | A3PE1500 | 60 | 256 | 1,080 (60×18) | 245,760 (4,096×60) | 1 |
| AGLE3000 | A3PE3000/L | 112 | 256 | 2,016 (112×18) | 458,752 (4,096×112) | 1 |

*Notes:*

1. *Maximum potential width uses the two-port configuration.*
2. *Maximum potential depth uses the dual-port configuration.*

***Table 6-9* • Memory Availability per Fusion Device**

| Device | RAM Blocks | Maximum Potential Width[1] | | Maximum Potential Depth[2] | |
|---|---|---|---|---|---|
| | | Depth | Width | Depth | Width |
| AFS090 | 6 | 256 | 108 (6×18) | 24,576 (4,094×6) | 1 |
| AFS250 | 8 | 256 | 144 (8×18) | 32,768 (4,094×8) | 1 |
| AFS600 | 24 | 256 | 432 (24×18) | 98,304 (4,096×24) | 1 |
| AFS1500 | 60 | 256 | 1,080 (60×18) | 245,760 (4,096×60) | 1 |

*Notes:*

1. *Maximum potential width uses the two-port configuration.*
2. *Maximum potential depth uses the dual-port configuration.*

***Table 6-10* • RAM and FIFO Memory Block Consumption**

| | | | Depth | | | | | | | |
|---|---|---|---|---|---|---|---|---|---|---|
| | | | 256 | | 512 | 1,024 | 2,048 | 4,096 | 8,192 | 16,384 |
| | | | Two-Port | Dual-Port | Dual-Port | Dual-Port | Dual-Port | Dual-Port | Dual-Port | Dual-Port |
| Width | 1 | Number Block | 1 | 1 | 1 | 1 | 1 | 1 | 2 | 4 |
| | | Configuration | Any | Any | Any | 1,024 × 4 | 2,048 × 2 | 4,096 × 1 | 2 × (4,096 × 1) Cascade Deep | 4 × (4,096 × 1) Cascade Deep |
| | 2 | Number Block | 1 | 1 | 1 | 1 | 1 | 2 | 4 | 8 |
| | | Configuration | Any | Any | Any | 1,024×4 | 2,048 × 2 | 2 × (4,096 × 1) Cascaded Wide | 4 × (4,096 × 1) Cascaded 2 Deep and 2 Wide | 8 × (4,096 × 1) Cascaded 4 Dee and 2 Wide |
| | 4 | Number Block | 1 | 1 | 1 | 1 | 2 | 4 | 8 | 16 |
| | | Configuration | Any | Any | Any | 1,024 × 4 | 2 × (2,048 × 2) Cascaded Wide | 4 × (4,096 × 1) Cascaded Wide | 4 × (4,096 × 1) Cascaded 2 Deep and 4 Wide | 16 × (4,096 × 1 Cascaded 4 Dee and 4 Wide |
| | 8 | Number Block | 1 | 1 | 1 | 2 | 4 | 8 | 16 | 32 |
| | | Configuration | Any | Any | Any | 2 × (1,024 × 4) Cascaded Wide | 4 × (2,048 × 2) Cascaded Wide | 8 × (4,096 × 1) Cascaded Wide | 16 × (4,096 × 1) Cascaded 2 Deep and 8 Wide | 32 × (4,096 × 1 Cascaded 4 Dee and 8 Wide |
| | 9 | Number Block | 1 | 1 | 1 | 2 | 4 | 8 | 16 | 32 |
| | | Configuration | Any | Any | Any | 2 × (512 × 9) Cascaded Deep | 4 × (512 × 9) Cascaded Deep | 8 × (512 × 9) Cascaded Deep | 16 × (512 × 9) Cascaded Deep | 32 × (512 × 9) Cascaded Deep |
| | 16 | Number Block | 1 | 1 | 1 | 4 | 8 | 16 | 32 | 64 |
| | | Configuration | 256 × 18 | 256 × 18 | 256 × 18 | 4 × (1,024 × 4) Cascaded Wide | 8 × (2,048 × 2) Cascaded Wide | 16 × (4,096 × 1) Cascaded Wide | 32 × (4,096 × 1) Cascaded 2 Deep and 16 Wide | 32 × (4,096 × 1 Cascaded 4 Dee and 16 Wide |
| | 18 | Number Block | 1 | 2 | 2 | 4 | 8 | 18 | 32 | |
| | | Configuration | 256 × 8 | 2 × (512 × 9) Cascaded Wide | 2 × (512 × 9) Cascaded Wide | 4 × (512 × 9) Cascaded 2 Deep and 2 Wide | 8 × (512 × 9) Cascaded 4 Deep and 2 Wide | 16 × (512 × 9) Cascaded 8 Deep and 2 Wide | 16 × (512 × 9) Cascaded 16 Deep and 2 Wide | |
| | 32 | Number Block | 2 | 4 | 4 | 8 | 16 | 32 | 64 | |
| | | Configuration | 2 × (256 × 18) Cascaded Wide | 4 × (512 × 9) Cascaded Wide | 4 × (512 × 9) Cascaded Wide | 8 × (1,024 × 4) Cascaded Wide | 16 × (2,048 × 2) Cascaded Wide | 32 × (4,096 × 1) Cascaded Wide | 64 × (4,096 × 1) Cascaded 2 Deep and 32 Wide | |
| | 36 | Number Block | 2 | 4 | 4 | 8 | 16 | 32 | | |
| | | Configuration | 2 × (256 × 18) Cascaded Wide | 4 × (512 × 9) Cascaded Wide | 4 × (512 × 9) Cascaded Wide | 4 × (512 × 9) Cascaded 2 Deep and 4 Wide | 16 × (512 × 9) Cascaded 4 Deep and 4 Wide | 16 × (512 × 9) Cascaded 8 Deep and 4 Wide | | |
| | 64 | Number Block | 4 | 8 | 8 | 16 | 32 | 64 | | |
| | | Configuration | 4 × (256 × 18) Cascaded Wide | 8 × (512 × 9) Cascaded Wide | 8 × (512 × 9) Cascaded Wide | 16 × (1,024 × 4) Cascaded Wide | 32 × (2,048 × 2) Cascaded Wide | 64 × (4,096 × 1) Cascaded Wide | | |
| | 72 | Number Block | 4 | 8 | 8 | 16 | 32 | | | |
| | | Configuration | 4 × (256 × 18) Cascaded Wide | 8 × (512 × 9) Cascaded Wide | 8 × (512 × 9) Cascaded Wide | 16 × (512 × 9) Cascaded Wide | 16 × (512 × 9) Cascaded 4 Deep and 8 Wide | | | |

*Note: Memory configurations represented by grayed cells are not supported.*

# Initializing the RAM/FIFO

The SRAM blocks can be initialized with data to use as a lookup table (LUT). Data initialization can be accomplished either by loading the data through the design logic or through the UJTAG interface. The UJTAG macro is used to allow access from the JTAG port to the internal logic in the device. By sending the appropriate initialization string to the JTAG Test Access Port (TAP) Controller, the designer can put the JTAG circuitry into a mode that allows the user to shift data into the array logic through the JTAG port using the UJTAG macro. For a more detailed explanation of the UJTAG macro, refer to the "FlashROM in Microsemi's Low Power Flash Devices" section on page 117.

A user interface is required to receive the user command, initialization data, and clock from the UJTAG macro. The interface must synchronize and load the data into the correct RAM block of the design. The main outputs of the user interface block are the following:

- Memory block chip select: Selects a memory block for initialization. The chip selects signals for each memory block that can be generated from different user-defined pockets or simple logic, such as a ring counter (see below).
- Memory block write address: Identifies the address of the memory cell that needs to be initialized.
- Memory block write data: The interface block receives the data serially from the UTDI port of the UJTAG macro and loads it in parallel into the write data ports of the memory blocks.
- Memory block write clock: Drives the WCLK of the memory block and synchronizes the write data, write address, and chip select signals.

Figure 6-8 shows the user interface between UJTAG and the memory blocks.

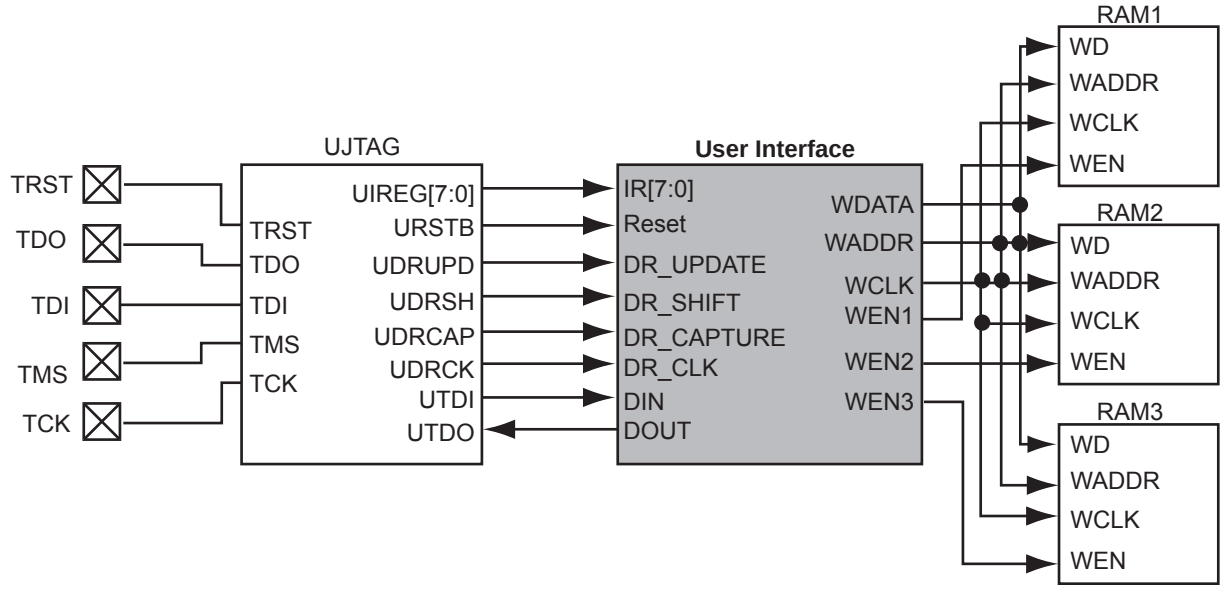


***Figure 6-8* • Interfacing TAP Ports and SRAM Blocks**

An important component of the interface between the UJTAG macro and the RAM blocks is a serial-in/parallel-out shift register. The width of the shift register should equal the data width of the RAM blocks. The RAM data arrives serially from the UTDI output of the UJTAG macro. The data must be shifted into a shift register clocked by the JTAG clock (provided at the UDRCK output of the UJTAG macro).

Then, after the shift register is fully loaded, the data must be transferred to the write data port of the RAM block. To synchronize the loading of the write data with the write address and write clock, the output of the shift register can be pipelined before driving the RAM block.

The write address can be generated in different ways. It can be imported through the TAP using a different instruction opcode and another shift register, or generated internally using a simple counter. Using a counter to generate the address bits and sweep through the address range of the RAM blocks is

recommended, since it reduces the complexity of the user interface block and the board-level JTAG driver.

Moreover, using an internal counter for address generation speeds up the initialization procedure, since the user only needs to import the data through the JTAG port.

The designer may use different methods to select among the multiple RAM blocks. Using counters along with demultiplexers is one approach to set the write enable signals. Basically, the number of RAM blocks needing initialization determines the most efficient approach. For example, if all the blocks are initialized with the same data, one enable signal is enough to activate the write procedure for all of them at the same time. Another alternative is to use different opcodes to initialize each memory block. For a small number of RAM blocks, using counters is an optimal choice. For example, a ring counter can be used to select from multiple RAM blocks. The clock driver of this counter needs to be controlled by the address generation process.

Once the addressing of one block is finished, a clock pulse is sent to the (ring) counter to select the next memory block.

Figure 6-9 illustrates a simple block diagram of an interface block between UJTAG and RAM blocks.

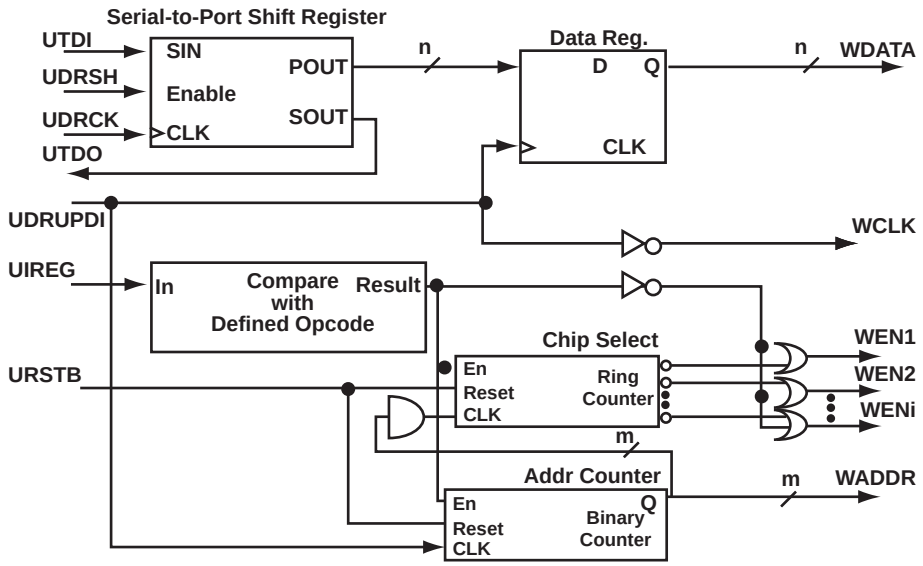


***Figure 6-9* • Block Diagram of a Sample User Interface**

In the circuit shown in Figure 6-9, the shift register is enabled by the UDRSH output of the UJTAG macro. The counters and chip select outputs are controlled by the value of the TAP Instruction Register. The comparison block compares the UIREG value with the "start initialization" opcode value (defined by the user). If the result is true, the counters start to generate addresses and activate the WEN inputs of appropriate RAM blocks.

The UDRUPD output of the UJTAG macro, also shown in Figure 6-9, is used for generating the write clock (WCLK) and synchronizing the data register and address counter with WCLK. UDRUPD is HIGH when the TAP Controller is in the Data Register Update state, which is an indication of completing the loading of one data word. Once the TAP Controller goes into the Data Register Update state, the UDRUPD output of the UJTAG macro goes HIGH. Therefore, the pipeline register and the address counter place the proper data and address on the outputs of the interface block. Meanwhile, WCLK is defined as the inverted UDRUPD. This will provide enough time (equal to the UDRUPD HIGH time) for the data and address to be placed at the proper ports of the RAM block before the rising edge of WCLK. The inverter is not required if the RAM blocks are clocked at the falling edge of the write clock. An example of this is described in the "Example of RAM Initialization" section on page 150.

## Example of RAM Initialization

This section of the document presents a sample design in which a 4×4 RAM block is being initialized through the JTAG port. A test feature has been implemented in the design to read back the contents of the RAM after initialization to verify the procedure.

The interface block of this example performs two major functions: initialization of the RAM block and running a test procedure to read back the contents. The clock output of the interface is either the write clock (for initialization) or the read clock (for reading back the contents). The Verilog code for the interface block is included in the "Sample Verilog Code" section on page 151.

For simulation purposes, users can declare the input ports of the UJTAG macro for easier assignment in the testbench. However, the UJTAG input ports should not be declared on the top level during synthesis. If the input ports of the UJTAG are declared during synthesis, the synthesis tool will instantiate input buffers on these ports. The input buffers on the ports will cause Compile to fail in Designer.

Figure 6-10 shows the simulation results for the initialization step of the example design.

The CLK_OUT signal, which is the clock output of the interface block, is the inverted DR_UPDATE output of the UJTAG macro. It is clear that it gives sufficient time (while the TAP Controller is in the Data Register Update state) for the write address and data to become stable before loading them into the RAM block.

Figure 6-11 presents the test procedure of the example. The data read back from the memory block matches the written data, thus verifying the design functionality.

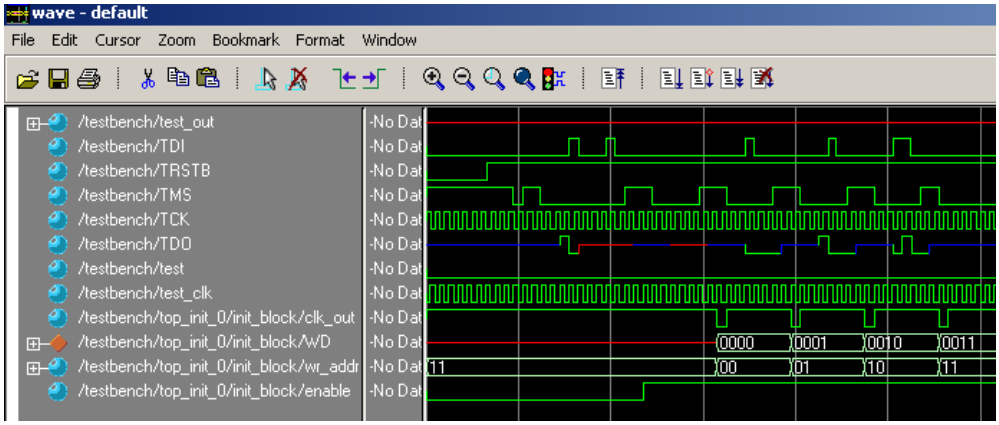


***Figure 6-10*** **• Simulation of Initialization Step**

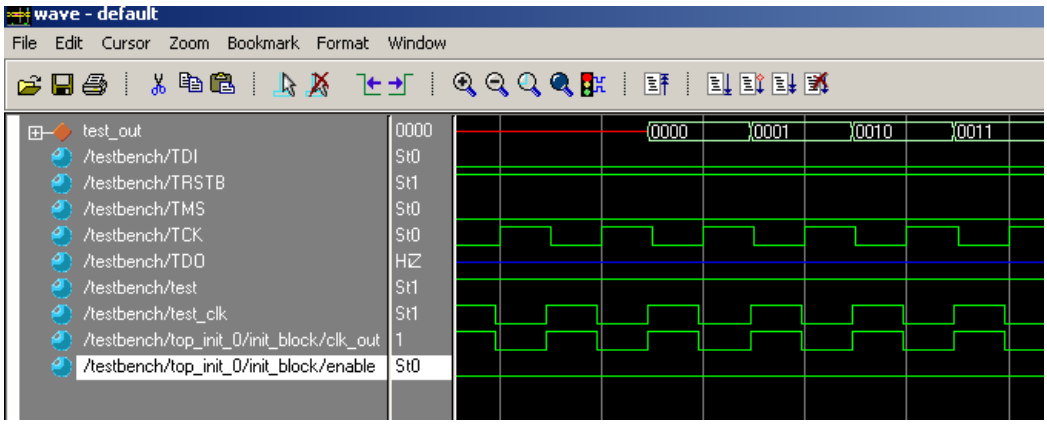


***Figure 6-11*** **• Simulation of the Test Procedure of the Example**

The ROM emulation application is based on RAM block initialization. If the user's main design has access only to the read ports of the RAM block (RADDR, RD, RCLK, and REN), and the contents of the RAM are already initialized through the TAP, then the memory blocks will emulate ROM functionality for the core design. In this case, the write ports of the RAM blocks are accessed only by the user interface block, and the interface is activated only by the TAP Instruction Register contents.

Users should note that the contents of the RAM blocks are lost in the absence of applied power. However, the 1 kbit of flash memory, FlashROM, in low power flash devices can be used to retain data after power is removed from the device. Refer to the "SRAM and FIFO Memories in Microsemi's Low Power Flash Devices" section on page 131 for more information.

## Sample Verilog Code

### *Interface Block*

```
`define Initialize_start 8'h22 //INITIALIZATION START COMMAND VALUE
`define Initialize_stop 8'h23 //INITIALIZATION START COMMAND VALUE

module interface(IR, rst_n, data_shift, clk_in, data_update, din_ser, dout_ser, test,
  test_out,test_clk,clk_out,wr_en,rd_en,write_word,read_word,rd_addr, wr_addr);

input [7:0] IR;
input [3:0] read_word; //RAM DATA READ BACK
input rst_n, data_shift, clk_in, data_update, din_ser; //INITIALIZATION SIGNALS
input test, test_clk; //TEST PROCEDURE CLOCK AND COMMAND INPUT
output [3:0] test_out; //READ DATA
output [3:0] write_word; //WRITE DATA
output [1:0] rd_addr; //READ ADDRESS
output [1:0] wr_addr; //WRITE ADDRESS
output dout_ser; //TDO DRIVER
output clk_out, wr_en, rd_en;

wire [3:0] write_word;
wire [1:0] rd_addr;
wire [1:0] wr_addr;
wire [3:0] Q_out;
wire enable, test_active;

reg clk_out;

//SELECT CLOCK FOR INITIALIZATION OR READBACK TEST
always @(enable or test_clk or data_update)
begin
  case ({test_active})
    1 : clk_out = test_clk ;
    0 : clk_out = !data_update;
    default : clk_out = 1'b1;
  endcase
end

assign test_active = test && (IR == 8'h23);
assign enable = (IR == 8'h22);
assign wr_en = !enable;
assign rd_en = !test_active;
assign test_out = read_word;
assign dout_ser = Q_out[3];

//4-bit SIN/POUT SHIFT REGISTER
shift_reg data_shift_reg (.Shiften(data_shift), .Shiftin(din_ser), .Clock(clk_in),
  .Q(Q_out));

//4-bit PIPELINE REGISTER
D_pipeline pipeline_reg (.Data(Q_out), .Clock(data_update), .Q(write_word));
```

```
//
addr_counter counter_1 (.Clock(data_update), .Q(wr_addr), .Aset(rst_n),
  .Enable(enable));
addr_counter counter_2 (.Clock(test_clk), .Q(rd_addr), .Aset(rst_n),
  .Enable( test_active));

endmodule
```

### Interface Block / UJTAG Wrapper

This example is a sample wrapper, which connects the interface block to the UJTAG and the memory blocks.

```
// WRAPPER
module top_init (TDI, TRSTB, TMS, TCK, TDO, test, test_clk, test_ out);

input TDI, TRSTB, TMS, TCK;
output TDO;
input test, test_clk;
output [3:0] test_out;

wire [7:0] IR;
wire reset, DR_shift, DR_cap, init_clk, DR_update, data_in, data_out;
wire clk_out, wen, ren;
wire [3:0] word_in, word_out;
wire [1:0] write_addr, read_addr;

UJTAG UJTAG_U1 (.UIREG0(IR[0]), .UIREG1(IR[1]), .UIREG2(IR[2]), .UIREG3(IR[3]),
  .UIREG4(IR[4]), .UIREG5(IR[5]), .UIREG6(IR[6]), .UIREG7(IR[7]), .URSTB(reset),
  .UDRSH(DR_shift), .UDRCAP(DR_cap), .UDRCK(init_clk), .UDRUPD(DR_update),
  .UT-DI(data_in), .TDI(TDI), .TMS(TMS), .TCK(TCK), .TRSTB(TRSTB), .TDO(TDO),
  .UT-DO(data_out));
mem_block RAM_block (.DO(word_out), .RCLOCK(clk_out), .WCLOCK(clk_out), .DI(word_in),
  .WRB(wen), .RDB(ren), .WAD-DR(write_addr), .RADDR(read_addr));
interface init_block (.IR(IR), .rst_n(reset), .data_shift(DR_shift), .clk_in(init_clk),
  .data_update(DR_update), .din_ser(data_in), .dout_ser(data_out), .test(test),
  .test_out(test_out), .test_clk(test_clk), .clk_out(clk_out), .wr_en(wen),
  .rd_en(ren), .write_word(word_in), .read_word(word_out), .rd_addr(read_addr),
  .wr_addr(write_addr));

endmodule
```

### Address Counter

```
module addr_counter (Clock, Q, Aset, Enable);

input Clock;
output [1:0] Q;
input Aset;
input Enable;

reg [1:0] Qaux;

always @(posedge Clock or negedge Aset)
begin
  if (!Aset) Qaux <= 2'b11;
  else if (Enable) Qaux <= Qaux + 1;
end

assign Q = Qaux;

endmodule
```

### Pipeline Register

```
module D_pipeline (Data, Clock, Q);

input [3:0] Data;
input Clock;
output [3:0] Q;

reg [3:0] Q;

always @ (posedge Clock) Q <= Data;

endmodule
```

### 4x4 RAM Block (created by SmartGen Core Generator)

```
module mem_block(DI,DO,WADDR,RADDR,WRB,RDB,WCLOCK,RCLOCK);

input [3:0] DI;
output [3:0] DO;
input [1:0] WADDR, RADDR;
input WRB, RDB, WCLOCK, RCLOCK;

wire WEBP, WEAP, VCC, GND;

VCC VCC_1_net(.Y(VCC));
GND GND_1_net(.Y(GND));
INV WEBUBBLEB(.A(WRB), .Y(WEBP));
RAM4K9 RAMBLOCK0(.ADDRA11(GND), .ADDRA10(GND), .ADDRA9(GND), .ADDRA8(GND),
  .ADDRA7(GND), .ADDRA6(GND), .ADDRA5(GND), .ADDRA4(GND), .ADDRA3(GND), .ADDRA2(GND),
  .ADDRA1(RADDR[1]), .ADDRA0(RADDR[0]), .ADDRB11(GND), .ADDRB10(GND), .ADDRB9(GND),
  .ADDRB8(GND), .ADDRB7(GND), .ADDRB6(GND), .ADDRB5(GND), .ADDRB4(GND), .ADDRB3(GND),
  .ADDRB2(GND), .ADDRB1(WADDR[1]), .ADDRB0(WADDR[0]), .DINA8(GND), .DINA7(GND),
  .DINA6(GND), .DINA5(GND), .DINA4(GND), .DINA3(GND), .DINA2(GND), .DINA1(GND),
  .DINA0(GND), .DINB8(GND), .DINB7(GND), .DINB6(GND), .DINB5(GND), .DINB4(GND),
  .DINB3(DI[3]), .DINB2(DI[2]), .DINB1(DI[1]), .DINB0(DI[0]), .WIDTHA0(GND),
  .WIDTHA1(VCC), .WIDTHB0(GND), .WIDTHB1(VCC), .PIPEA(GND), .PIPEB(GND),
  .WMODEA(GND), .WMODEB(GND), .BLKA(WEAP), .BLKB(WEBP), .WENA(VCC), .WENB(GND),
  .CLKA(RCLOCK), .CLKB(WCLOCK), .RESET(VCC), .DOUTA8(), .DOUTA7(), .DOUTA6(),
  .DOUTA5(), .DOUTA4(), .DOUTA3(DO[3]), .DOUTA2(DO[2]), .DOUTA1(DO[1]),
  .DOUTA0(DO[0]), .DOUTB8(), .DOUTB7(), .DOUTB6(), .DOUTB5(), .DOUTB4(), .DOUTB3(),
  .DOUTB2(), .DOUTB1(), .DOUTB0());
INV WEBUBBLEA(.A(RDB), .Y(WEAP));

endmodule
```

# Software Support

The SmartGen core generator is the easiest way to select and configure the memory blocks (Figure 6-12). SmartGen automatically selects the proper memory block type and aspect ratio, and cascades the memory blocks based on the user's selection. SmartGen also configures any additional signals that may require tie-off.

SmartGen will attempt to use the minimum number of blocks required to implement the desired memory. When cascading, SmartGen will configure the memory for width before configuring for depth. For example, if the user requests a 256×8 FIFO, SmartGen will use a 512×9 FIFO configuration, not 256×18.

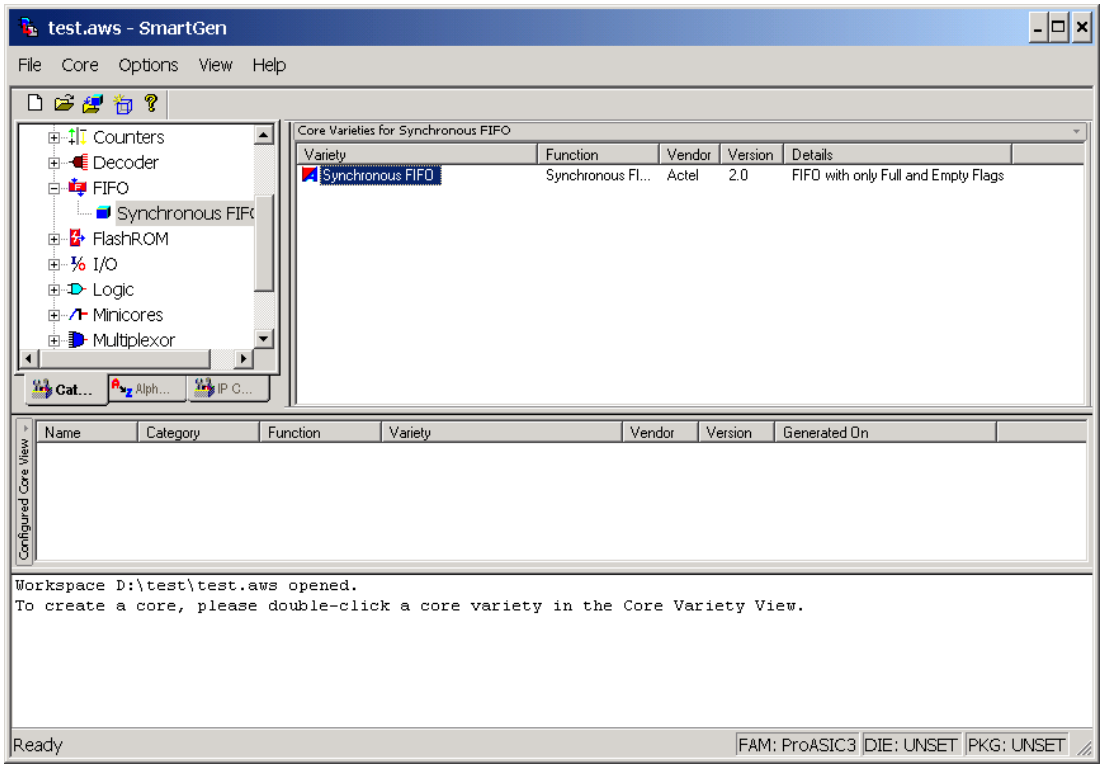


***Figure 6-12*** **• SmartGen Core Generator Interface**

SmartGen enables the user to configure the desired RAM element to use either a single clock for read and write, or two independent clocks for read and write. The user can select the type of RAM as well as the width/depth and several other parameters (Figure 6-13).

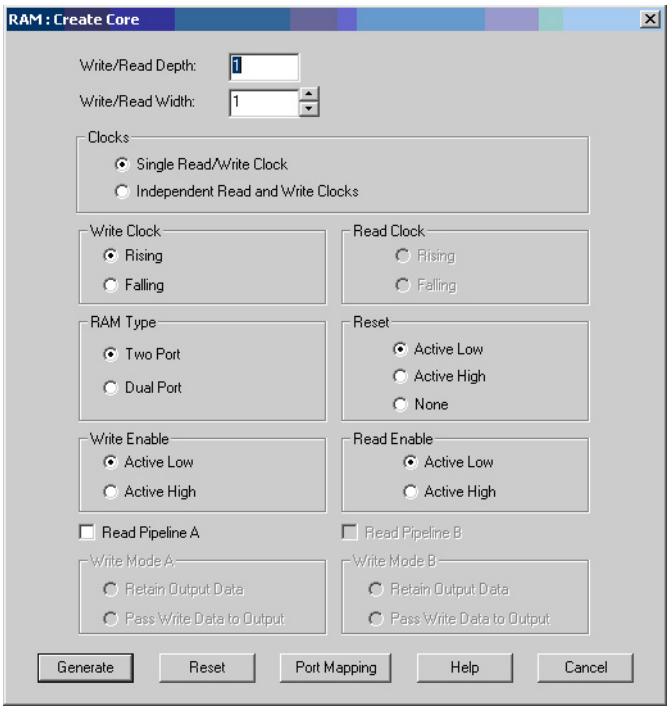


***Figure 6-13*** **• SmartGen Memory Configuration Interface**

SmartGen also has a Port Mapping option that allows the user to specify the names of the ports generated in the memory block (Figure 6-14).

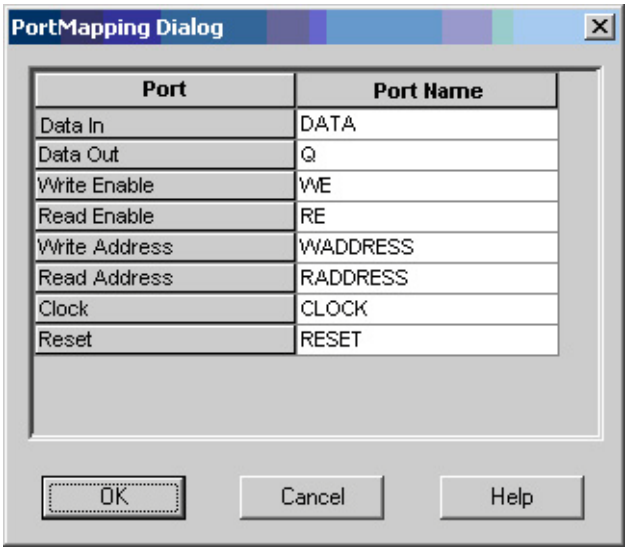


***Figure 6-14*** **• Port Mapping Interface for SmartGen-Generated Memory**

SmartGen also configures the FIFO according to user specifications. Users can select no flags, static flags, or dynamic flags. Static flag settings are configured using configuration flash and cannot be altered

without reprogramming the device. Dynamic flag settings are determined by register values and can be altered without reprogramming the device by reloading the register values either from the design or through the UJTAG interface described in the "Initializing the RAM/FIFO" section on page 148.

SmartGen can also configure the FIFO to continue counting after the FIFO is full. In this configuration, the FIFO write counter will wrap after the counter is full and continue to write data. With the FIFO configured to continue to read after the FIFO is empty, the read counter will also wrap and re-read data that was previously read. This mode can be used to continually read back repeating data patterns stored in the FIFO (Figure 6-15).

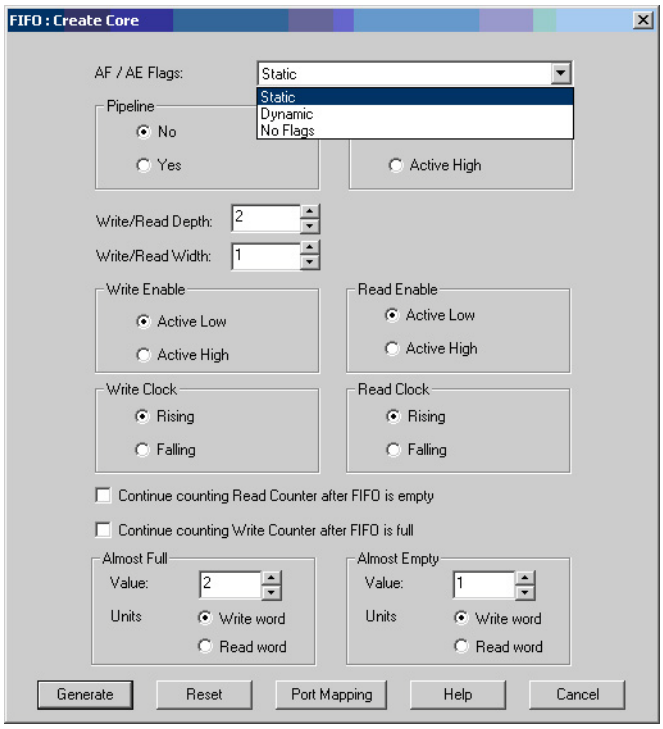


***Figure 6-15* • SmartGen FIFO Configuration Interface**

FIFOs configured using SmartGen can also make use of the port mapping feature to configure the names of the ports.

## Limitations

Users should be aware of the following limitations when configuring SRAM blocks for low power flash devices:

- SmartGen does not track the target device in a family, so it cannot determine if a configured memory block will fit in the target device.
- Dual-port RAMs with different read and write aspect ratios are not supported.
- Cascaded memory blocks can only use a maximum of 64 blocks of RAM.
- The Full flag of the FIFO is sensitive to the maximum depth of the actual physical FIFO block, not the depth requested in the SmartGen interface.

# Conclusion

Fusion, IGLOO, and ProASIC3 devices provide users with extremely flexible SRAM blocks for most design needs, with the ability to choose between an easy-to-use dual-port memory or a wide-word two-port memory. Used with the built-in FIFO controllers, these memory blocks also serve as highly efficient FIFOs that do not consume user gates when implemented. The SmartGen core generator provides a fast and easy way to configure these memory elements for use in designs.

# List of Changes

The following table lists critical changes that were made in each revision of the chapter.

| Date | Changes | Page |
|---|---|---|
| August 2012 | The note connected with Figure 6-3 • Supported Basic RAM Macros, regarding RAM4K9, was revised to explain that it applies only to part numbers of certain revisions and earlier (SAR 29574). | 136 |
| July 2010 | This chapter is no longer published separately with its own part number and version but is now part of several FPGA fabric user's guides. | N/A |
| v1.5<br>(December 2008) | IGLOO nano and ProASIC3 nano devices were added to Table 6-1 • Flash-Based FPGAs. | 134 |
| | IGLOO nano and ProASIC3 nano devices were added to Figure 6-8 • Interfacing TAP Ports and SRAM Blocks. | 148 |
| v1.4<br>(October 2008) | The "SRAM/FIFO Support in Flash-Based Devices" section was revised to include new families and make the information more concise. | 134 |
| | The "SRAM and FIFO Architecture" section was modified to remove "IGLOO and ProASIC3E" from the description of what the memory block includes, as this statement applies to all memory blocks. | 135 |
| | Wording in the "Clocking" section was revised to change "IGLOO and ProASIC3 devices support inversion" to "Low power flash devices support inversion." The reference to IGLOO and ProASIC3 development tools in the last paragraph of the section was changed to refer to development tools in general. | 141 |
| | The "ESTOP and FSTOP Usage" section was updated to refer to FIFO counters in devices in general rather than only IGLOO and ProASIC3E devices. | 144 |
| v1.3<br>(August 2008) | The note was removed from Figure 6-7 • RAM Block with Embedded FIFO Controller and placed in the WCLK and RCLK description. | 142 |
| | The "WCLK and RCLK" description was revised. | 143 |
| v1.2<br>(June 2008) | The following changes were made to the family descriptions in Table 6-1 • Flash-Based FPGAs:<br>• ProASIC3L was updated to include 1.5 V.<br>• The number of PLLs for ProASIC3E was changed from five to six. | 134 |
| v1.1<br>(March 2008) | The "Introduction" section was updated to include the IGLOO PLUS family. | 131 |
| | The "Device Architecture" section was updated to state that 15 k gate devices do not support SRAM and FIFO. | 131 |
| | The first note in Figure 6-1 • IGLOO and ProASIC3 Device Architecture Overview was updated to include mention of 15 k gate devices, and IGLOO PLUS was added to the second note. | 133 |

| Date | Changes | Page |
|---|---|---|
| v1.1 (continued) | Table 6-1 • Flash-Based FPGAs and associated text were updated to include the IGLOO PLUS family. The "IGLOO Terminology" section and "ProASIC3 Terminology" section are new. | 134 |
| | The text introducing Table 6-8 • Memory Availability per IGLOO and ProASIC3 Device was updated to replace "A3P030 and AGL030" with "15 k and 30 k gate devices." Table 6-8 • Memory Availability per IGLOO and ProASIC3 Device was updated to remove AGL400 and AGLE1500 and include IGLOO PLUS and ProASIC3L devices. | 146 |

# 7 – I/O Structures in nano Devices

## Introduction

Low power flash devices feature a flexible I/O structure, supporting a range of mixed voltages (1.2 V, 1.5 V, 1.8 V, 2.5 V, and 3.3 V) through bank-selectable voltages. IGLOO® and ProASIC3 nano devices support standard I/Os with the addition of Schmitt trigger and hot-swap capability.

Users designing I/O solutions are faced with a number of implementation decisions and configuration choices that can directly impact the efficiency and effectiveness of their final design. The flexible I/O structure, supporting a wide variety of voltages and I/O standards, enables users to meet the growing challenges of their many diverse applications. The Microsemi Libero® System-on-Chip (SoC) software provides an easy way to implement I/O that will result in robust I/O design.

This document describes Standard I/O types used for the nano devices in terms of he supported standards. It then explains the individual features and how to implement them in Libero SoC.

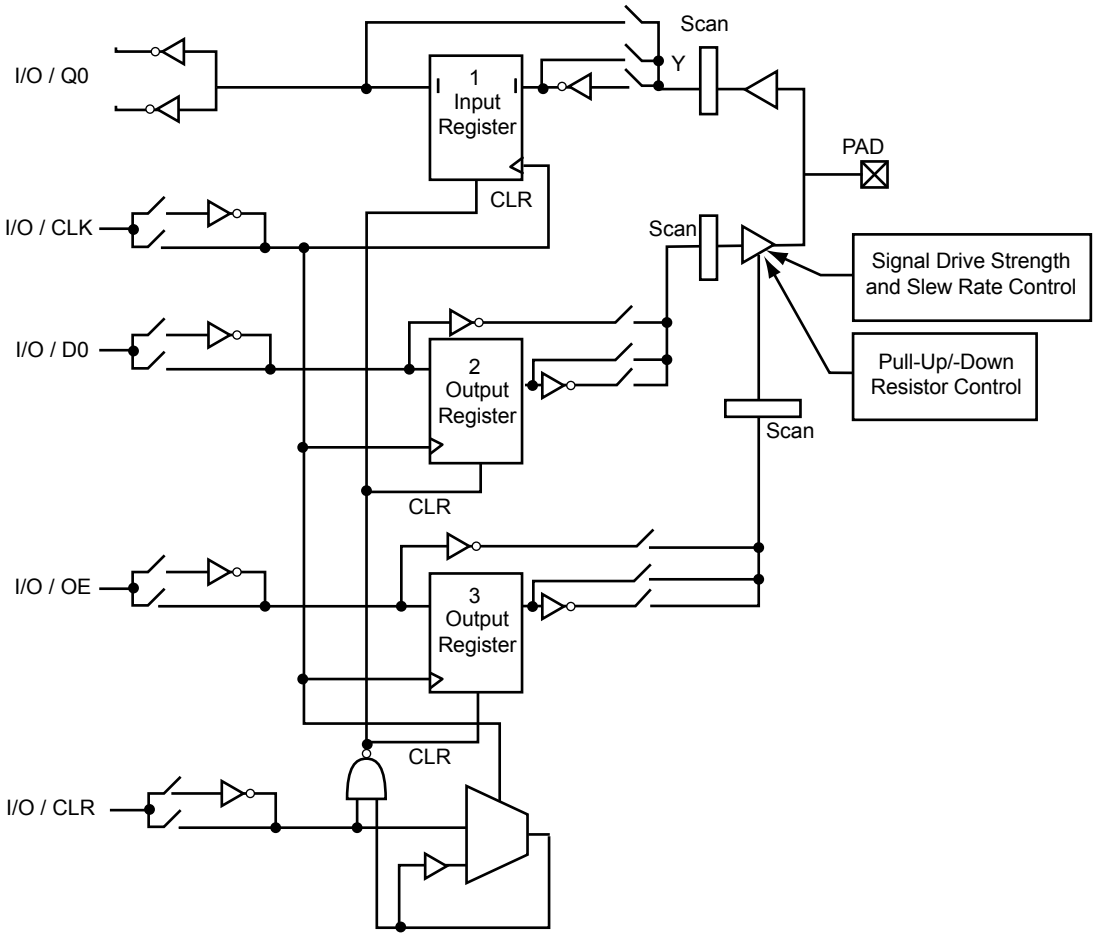


***Figure 7-1*** **• I/O Block Logical Representation for Single-Tile Designs (10 k, 15 k, and 20 k devices)**

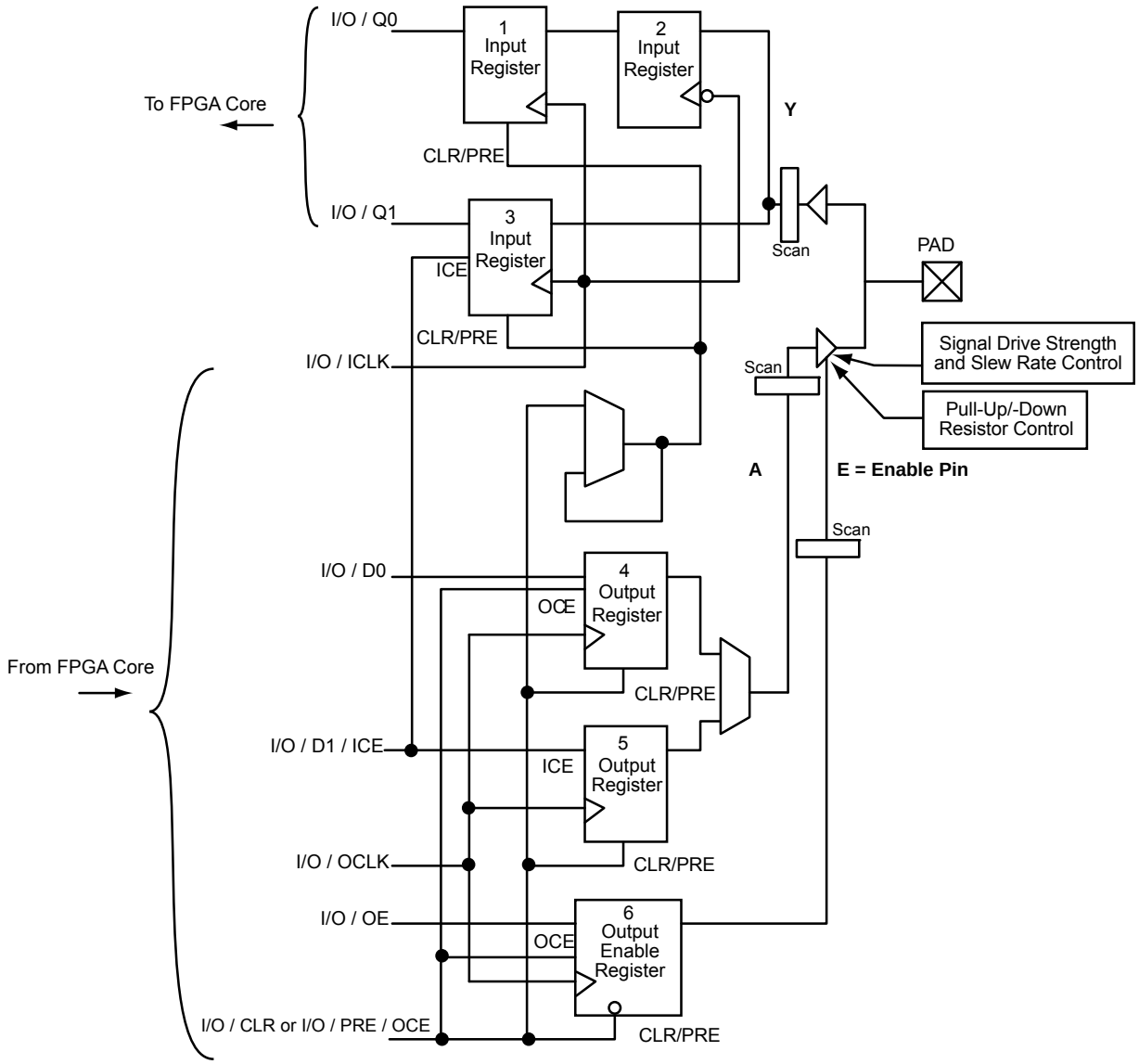


***Figure 7-2*** **• I/O Block Logical Representation for Dual-Tile Designs (60 k,125 k, and 250 k Devices)**

# Low Power Flash Device I/O Support

The low power flash families listed in Table 7-1 support I/Os and the functions described in this document.

***Table 7-1* • Flash-Based FPGAs**

| Series | Family* | Description |
|---|---|---|
| IGLOO | IGLOO nano | Lowest power 1.2 V to 1.5 V FPGAs with Flash*Freeze technology |
| ProASIC3 | ProASIC3 nano | Lowest cost 1.5 V FPGAs with balanced performance |

*Note: *The device name links to the appropriate datasheet, including product brief, DC and switching characteristics, and packaging information.*

## *IGLOO Terminology*

In documentation, the terms IGLOO series and IGLOO devices refer to all of the IGLOO devices as listed in Table 7-1. Where the information applies to only one product line or limited devices, these exclusions will be explicitly stated.

## *ProASIC3 Terminology*

In documentation, the terms ProASIC3 series and ProASIC3 devices refer to all of the ProASIC3 devices as listed in Table 7-1. Where the information applies to only one product line or limited devices, these exclusions will be explicitly stated.

To further understand the differences between the IGLOO and ProASIC3 devices, refer to the *Industry's Lowest Power FPGAs Portfolio*.

# nano Standard I/Os

Table 7-2 and Table 7-3 show the voltages and compatible I/O standards for ProASIC3 nano and IGLOO nano devices.

I/Os provide programmable slew rates, drive strengths, and weak pull-up and pull-down circuits. Selectable Schmitt trigger and 5 V tolerant receivers are offered. See the "5 V Input Tolerance" section on page 171 for possible implementations of 5 V tolerance.

All I/Os are in a known state during power-up, and any power-up sequence is allowed without current impact. Refer to the "I/O Power-Up and Supply Voltage Thresholds for Power-On Reset (Commercial and Industrial)" section in the datasheet for more information. During power-up, before reaching activation levels, the I/O input and output buffers are disabled while the weak pull-up is enabled. Activation levels are described in the datasheet.

***Table 7-2* • Supported I/O Standards for IGLOO nano Devices**

| IGLOO nano | AGLN010 | AGLN015 | AGLN020 | AGLN060 | AGLN125 | AGLN250 |
|---|---|---|---|---|---|---|
| **Single-Ended** | | | | | | |
| LVTTL/LVCMOS 3.3 V,<br>LVCMOS 2.5 V / 1.8 V / 1.5 V / 1.2 V | ✓ | ✓ | ✓ | ✓ | ✓ | ✓ |

***Table 7-3* • Supported I/O Standards for ProASIC3 Devices**

| ProASIC3 nano | A3PN010 | A3PN015 | A3PN020 | A3PN060 | A3PN125 | A3PN250 |
|---|---|---|---|---|---|---|
| **Single-Ended** | | | | | | |
| LVTTL/LVCMOS 3.3 V,<br>LVCMOS 2.5 V / 1.8 V / 1.5 V | ✓ | ✓ | ✓ | ✓ | ✓ | ✓ |

## I/O Banks and I/O Standards Compatibility

I/Os are grouped into I/O voltage banks. nano devices have two, three, or four I/O banks.

Each I/O voltage bank has dedicated I/O supply and ground voltages. This isolation is necessary to minimize simultaneous switching noise from the input and output (SSI and SSO). The switching noise (ground bounce and power bounce) is generated by the output buffers and transferred into input buffer circuits, and vice versa. Because of these dedicated supplies, only I/Os with compatible standards can be assigned to the same I/O voltage bank. Table 7-4 shows the required voltage compatibility values for each of these voltages.

There are four I/O banks on the 250 k gate device.

There are three I/O banks on the 15 k and 20 k gate devices.

There are two I/O banks on the 10 k, 60 k, and 125 k gate devices.

I/O standards are compatible if their VCCI values are identical. For more information about I/O and global assignments to I/O banks in a device, refer to the specific pin table for the device in the packaging section of the datasheet and the "User I/O Naming Convention" section on page 178.

***Table 7-4* • VCCI Voltages and Compatible Standards**

| VCCI (typical) | Compatible Standards |
|---|---|
| 3.3 V | LVTTL/LVCMOS 3.3 |
| 2.5 V | LVCMOS 2.5 |
| 1.8 V | LVCMOS 1.8 |
| 1.5 V | LVCMOS 1.5 |
| 1.2 V | LVCMOS 1.2 |

## Features Supported on Every I/O

Table 7-5 lists all features supported by transmitter/receiver for single-ended I/Os. Table 7-6 lists the performance of each I/O technology.

***Table 7-5* • I/O Features**

| Feature | Description |
|---|---|
| All I/O | • High performance (Table 7-6)<br>• Electrostatic discharge (ESD) protection<br>• I/O register combining option |
| Single-Ended Transmitter Features | • Hot-swap<br>• I/Os can be configured to behave in Flash*Freeze mode as tristate, HIGH, LOW, or to hold the previous state (not supported on ProASIC3 nano devices).<br>• Programmable output slew rate: high and low<br>• Optional weak pull-up and pull-down resistors<br>• Output drive: 2 drive strengths (except for LVCMOS 1.2 V)<br>• LVTTL/LVCMOS 3.3 V outputs compatible with 5 V TTL inputs |
| Single-Ended Receiver Features | • Selectable Schmitt trigger<br>• 5 V–input–tolerant receiver (Table 7-12 on page 171)<br>• Separate ground plane for GNDQ pin and power plane for $V_{CCI}$ pin are used for input buffer to reduce output-induced noise. |
| DDR | • DDR is supported for 60 k gate devices and above. |

***Table 7-6* • Maximum I/O Frequency**

| Specification | Maximum Performance | | |
|---|---|---|---|
| | ProASIC3 nano 1.5 V DC Core Supply Voltage | IGLOO nano V2 or V5 Devices, 1.5 V DC Core Supply Voltage | IGLOO nano V2, 1.2 V DC Core Supply Voltage |
| LVTTL/LVCMOS 3.3 V | 200 MHz | 180 MHz | TBD |
| LVCMOS 2.5 V | 250 MHz | 230 MHz | TBD |
| LVCMOS 1.8 V | 200 MHz | 180 MHz | TBD |
| LVCMOS 1.5 V | 130 MHz | 120 MHz | TBD |
| LVCMOS 1.2 V | Not supported | TBD | TBD |

# I/O Architecture

## I/O Tile

IGLOO and ProASIC3 nano devices utilize either a single-tile or dual-tile I/O architecture (Figure 7-1 on page 159 and Figure 7-2 on page 160). The 10 k, 15 k, and 20 k devices utilize the single-tile design and the 60 k, 125 k and 250 k devices utilize the dual-tile design. In both cases, the I/O tile provides a flexible, programmable structure for implementing a large number of I/O standards. In addition, the registers available in the I/O tile can be used to support high-performance register inputs and outputs, with register enable if desired. For single-tile designs, all I/O registers share both the CLR and CLK ports, while for the dual-tile designs, the output register and output enable register share one CLK port. For the dual-tile designs, the registers can also be used to support the JESD-79C Double Data Rate (DDR) standard within the I/O structure (see the "DDR for Microsemi's Low Power Flash Devices" section on page 205 for more information).

### *I/O Registers*

Each I/O module contains several input and output registers. Refer to Figure 7-3 on page 165 for a simplified representation of the I/O block. The number of input registers is selected by a set of switches (not shown in Figure 7-2 on page 160) between registers to implement single-ended data transmission to and from the FPGA core. The Designer software sets these switches for the user. For single-tile designs, a common CLR/PRE signal is employed by all I/O registers when I/O register combining is used. The I/O register combining requires that no combinatorial logic be present between the register and the I/O.

## I/O Bank Structure

Low power flash device I/Os are divided into multiple technology banks. The number of banks is device-dependent, supporting two, three, or four banks. Each bank has its own $V_{CCI}$ power supply pin. Refer to Figure 7-2 on page 160 for more information.

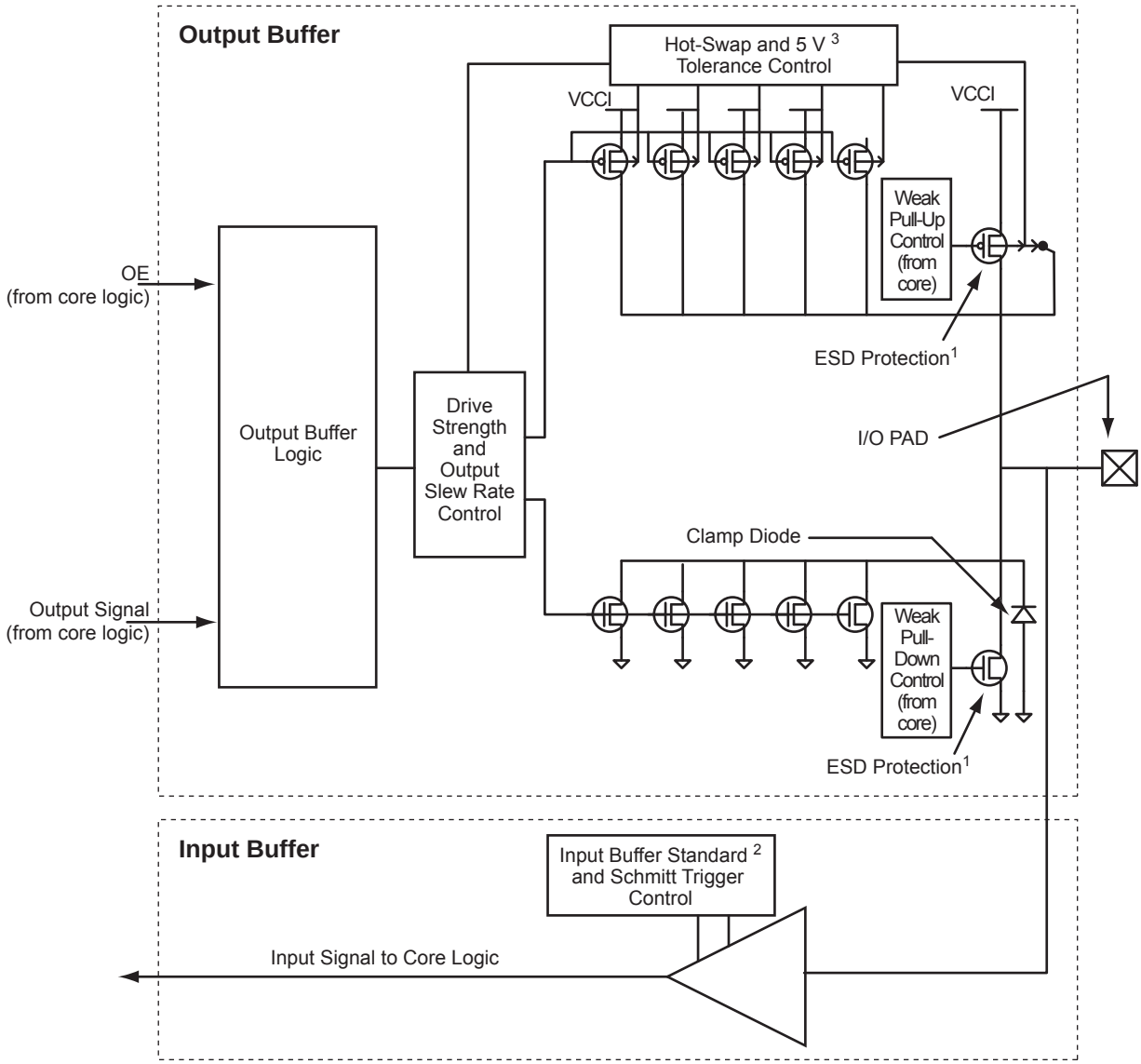


*Notes:*

1. *All NMOS transistors connected to the I/O pad serve as ESD protection.*
2. *See Table 7-2 on page 162 for available I/O standards.*
3. *5 V tolerance requires external resistor.*

***Figure 7-3* • Simplified I/O Buffer Circuitry**

# I/O Standards

## Single-Ended Standards

These I/O standards use a push-pull CMOS output stage with a voltage referenced to system ground to designate logical states. The input buffer configuration, output drive, and I/O supply voltage ($V_{CCI}$) vary among the I/O standards (Figure 7-4).

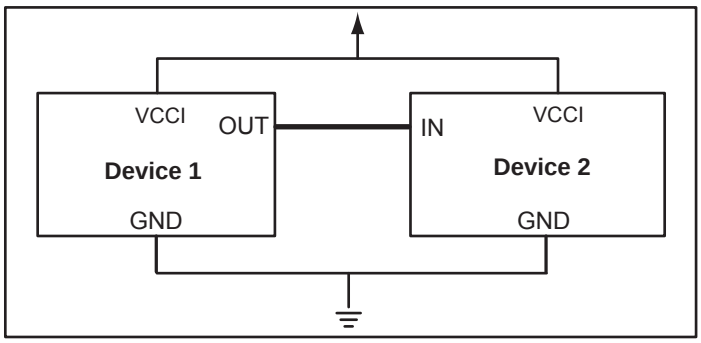


***Figure 7-4* • Single-Ended I/O Standard Topology**

The advantage of these standards is that a common ground can be used for multiple I/Os. This simplifies board layout and reduces system cost. Their low-edge-rate (*dv*/*dt*) data transmission causes less electromagnetic interference (EMI) on the board. However, they are not suitable for high-frequency (>200 MHz) switching due to noise impact and higher power consumption.

### *LVTTL (Low-Voltage TTL)*

This is a general-purpose standard (EIA/JESD8-B) for 3.3 V applications. It uses an LVTTL input buffer and a push-pull output buffer. The LVTTL output buffer can have up to six different programmable drive strengths. Refer to "I/O Programmable Features" on page 167 for details. Refer to Table 7-14 on page 176 for details.

### *LVCMOS (Low-Voltage CMOS)*

The low power flash devices provide five voltage levels for LVCMOS: LVCMOS 3.3 V, LVCMOS 2.5 V, LVCMOS 1.8 V, LVCMOS 1.5 V, and LVCMOS 1.2 V.

LVCMOS 3.3 V is an extension of the LVCMOS standard (JESD8-B–compliant) used for general-purpose 3.3 V applications. LVCMOS 2.5 V is an extension of the LVCMOS standard (JESD8-5–compliant) used for general-purpose 2.5 V applications. LVCMOS 1.8 V is an extension of the LVCMOS standard (JESD8-7–compliant) used for general-purpose 1.8 V applications. LVCMOS 1.5 V is an extension of the LVCMOS standard (JESD8-11–compliant) used for general-purpose 1.5 V applications. LVCMOS 1.2V is an extension of the LVCMOS standard (JESD8-12A-compliant) used for general-purpose 1.2 V applications.

The VCCI values for these standards are 3.3 V, 2.5 V, 1.8 V, 1.5 V, and 1.2 V, respectively. Like LVTTL, the output buffer has up to four different programmable drive strengths (2, 4, 6, and 8 mA). Refer to "nano Output Drive and Slew" on page 176 for details.

# Wide Range I/O Support

Microsemi nano devices support JEDEC defined wide range I/O operation. ProASIC3 nano devices support the JESD8-B specification covering both 3 V and 3.3 V supplies, for an effective operating range of 2.7 V – 3.6 V. IGLOO nano devices support both the JESD8-B specification per the above and JESD8-12A with 1.2 V nominal, supporting an effective operating range of 1.14 V – 1.575 V.

# I/O Features

Both IGLOO nano and ProASIC3 nano devices support multiple I/O features that make board design easier. For example, an I/O feature like Schmitt Trigger in the input buffer saves the board space that would be used by an external Schmitt trigger for a slow or noisy input signal. These features are also programmable for each I/O, which in turn gives flexibility in interfacing with other components. The following is a detailed description of all available features in nano devices.

## I/O Programmable Features

Low power flash devices offer many flexible I/O features to support a wide variety of board designs. Some of the features are programmable, with a range for selection. Table 7-7 lists programmable I/O features and their ranges.

***Table 7-7* • Programmable I/O Features (user control via I/O Attribute Editor)**

| Feature | Description | Range |
|---|---|---|
| Slew Control | Output slew rate | HIGH, LOW |
| Output Drive (mA) | Output drive strength | Depends on I/O type |
| Resistor Pull | Weak resistor pull circuit | Up, Down, None |
| Schmitt Trigger | Schmitt trigger for input only | ON, OFF |

## Hot-Swap Support

All nano devices are hot-swappable.

The hot-swap feature appears as a read-only check box in the I/O Attribute Editor that shows whether an I/O is hot-swappable or not. Refer to the "Power-Up/-Down Behavior of Low Power Flash Devices" section on page 307 for details on hot-swapping.

Hot-swapping is the operation of hot insertion or hot removal of a card in a powered-up system. The levels of hot-swap support and examples of related applications are described in Table 7-8 on page 168 to Table 7-11 on page 169. The I/Os also need to be configured in hot-insertion mode if hot-plugging compliance is required. nano devices have an I/O structure that allows the support of Level 3 and Level 4 hot-swap with only two levels of staging.

*Table 7-8* • **Hot-Swap Level 1**

| | |
|---|---|
| **Description** | Cold-swap |
| **Power Applied to Device** | No |
| **Bus State** | – |
| **Card Ground Connection** | – |
| **Device Circuitry Connected to Bus Pins** | – |
| **Example Application** | System and card with Microsemi FPGA chip are powered down, and the card is plugged into the system. Then the power supplies are turned on for the system but not for the FPGA on the card. |
| **Compliance of nano Devices** | Compliant |

*Table 7-9* • **Hot-Swap Level 2**

| | |
|---|---|
| **Description** | Hot-swap while reset |
| **Power Applied to Device** | Yes |
| **Bus State** | Held in reset state |
| **Card Ground Connection** | Reset must be maintained for 1 ms before, during, and after insertion/removal. |
| **Device Circuitry Connected to Bus Pins** | – |
| **Example Application** | In the PCI hot-plug specification, reset control circuitry isolates the card busses until the card supplies are at their nominal operating levels and stable. |
| **Compliance of nano Devices** | Compliant |

***Table 7-10* • Hot-Swap Level 3**

| | |
|---|---|
| **Description** | Hot-swap while bus idle |
| **Power Applied to Device** | Yes |
| **Bus State** | Held idle (no ongoing I/O processes during insertion/removal) |
| **Card Ground Connection** | Reset must be maintained for 1 ms before, during, and after insertion/removal. |
| **Device Circuitry Connected to Bus Pins** | Must remain glitch-free during power-up or power-down |
| **Example Application** | Board bus shared with card bus is "frozen," and there is no toggling activity on the bus. It is critical that the logic states set on the bus signal not be disturbed during card insertion/removal. |
| **Compliance of nano Devices** | Compliant |

***Table 7-11* • Hot-Swap Level 4**

| | |
|---|---|
| **Description** | Hot-swap on an active bus |
| **Power Applied to Device** | Yes |
| **Bus State** | Bus may have active I/O processes ongoing, but device being inserted or removed must be idle. |
| **Card Ground Connection** | Reset must be maintained for 1 ms before, during, and after insertion/removal. |
| **Device Circuitry Connected to Bus Pins** | Must remain glitch-free during power-up or power-down |
| **Example Application** | There is activity on the system bus, and it is critical that the logic states set on the bus signal not be disturbed during card insertion/removal. |
| **Compliance of nano Devices** | Compliant |

For Level 3 and Level 4 compliance with the nano devices, cards with two levels of staging should have the following sequence:

- Grounds
- Powers, I/Os, and other pins

## Cold-Sparing Support

*Cold-sparing* refers to the ability of a device to leave system data undisturbed when the system is powered up, while the component itself is powered down, or when power supplies are floating.

Cold-sparing is supported on all IGLOO nano and ProASIC3 nano devices only when the user provides resistors from each power supply to ground. The resistor value is calculated based on the decoupling capacitance on a given power supply. The RC constant should be greater than 3 µs.

To remove resistor current during operation, it is suggested that the resistor be disconnected (e.g., with an NMOS switch) from the power supply after the supply has reached its final value. Refer to the "Power-Up/-Down Behavior of Low Power Flash Devices" section on page 307 for details on cold-sparing.

Cold-sparing means that a subsystem with no power applied (usually a circuit board) is electrically connected to the system that is in operation. This means that all input buffers of the subsystem must present very high input impedance with no power applied so as not to disturb the operating portion of the system.

When targeting low power applications, I/O cold-sparing may add additional current if a pin is configured with either a pull-up or pull-down resistor and driven in the opposite direction. A small static current is induced on each I/O pin when the pin is driven to a voltage opposite to the weak pull resistor. The current is equal to the voltage drop across the input pin divided by the pull resistor. Refer to the "Detailed I/O DC Characteristics" section of the appropriate family datasheet for the specific pull resistor value for the corresponding I/O standard.

For example, assuming an LVTTL 3.3 V input pin is configured with a weak pull-up resistor, a current will flow through the pull-up resistor if the input pin is driven LOW. For LVTTL 3.3 V, the pull-up resistor is ~45 kΩ, and the resulting current is equal to 3.3 V / 45 kΩ = 73 µA when the I/O pin is driven LOW. This is true also when a weak pull-down is chosen and the input pin is driven HIGH. This current can be avoided by driving the input Low when a weak pull-down resistor is used and driving it HIGH when a weak pull-up resistor is used.

This current draw can occur in the following cases:

- In Active and Static modes:
  - Input buffers with pull-up, driven Low
  - Input buffers with pull-down, driven High
  - Bidirectional buffers with pull-up, driven Low
  - Bidirectional buffers with pull-down, driven High
  - Output buffers with pull-up, driven Low
  - Output buffers with pull-down, driven High
  - Tristate buffers with pull-up, driven Low
  - Tristate buffers with pull-down, driven High
- In Flash*Freeze mode (not supported on ProASIC3 nano devices):
  - Input buffers with pull-up, driven Low
  - Input buffers with pull-down, driven High
  - Bidirectional buffers with pull-up, driven Low
  - Bidirectional buffers with pull-down, driven High

## Electrostatic Discharge Protection

Low power flash devices are tested per JEDEC Standard JESD22-A114-B.

These devices contain clamp diodes at every I/O, global, and power pad. Clamp diodes protect all device pads against damage from ESD as well as from excessive voltage transients.

All nano devices are qualified to the Human Body Model (HBM) and the Charged Device Model (CDM).

***Table 7-12* • I/O Hot-Swap and 5 V Input Tolerance Capabilities in nano Devices**

| I/O Assignment | Clamp Diode | Hot Insertion | 5 V Input Tolerance | Input Buffer | Output Buffer |
|---|---|---|---|---|---|
| 3.3 V LVTTL/LVCMOS | No | Yes | Yes* | Enabled/Disabled | |
| LVCMOS 2.5 V | No | Yes | No | Enabled/Disabled | |
| LVCMOS 1.8 V | No | Yes | No | Enabled/Disabled | |
| LVCMOS 1.5 V | No | Yes | No | Enabled/Disabled | |
| LVCMOS 1.2 V | No | Yes | No | Enabled/Disabled | |

* *Can be implemented with an external IDT bus switch, resistor divider, or Zener with resistor.*

## 5 V Input and Output Tolerance

nano devices can be made 5 V–input–tolerant for certain I/O standards by using external level shifting techniques. 5 V output compliance can be achieved using certain I/O standards.

Table 7-5 on page 163 shows the I/O standards that support 5 V input tolerance. Only 3.3 V LVTTL/LVCMOS standards support 5 V output tolerance.

### *5 V Input Tolerance*

I/Os can support 5 V input tolerance when LVTTL 3.3 V or LVCMOS 3.3 V configurations are used (see Table 7-12). There are three recommended solutions for achieving 5 V receiver tolerance (see Figure 7-5 on page 172 to Figure 7-7 on page 173 for details of board and macro setups). All the solutions meet a common requirement of limiting the voltage at the input to 3.6 V or less. In fact, the I/O absolute maximum voltage rating is 3.6 V, and any voltage above 3.6 V may cause long-term gate oxide failures.

#### Solution 1

The board-level design must ensure that the reflected waveform at the pad does not exceed the limits provided in the recommended operating conditions in the datasheet. This is a requirement to ensure long-term reliability.

This solution requires two board resistors, as demonstrated in Figure 7-5 on page 172. Here are some examples of possible resistor values (based on a simplified simulation model with no line effects and 10 Ω transmitter output resistance, where Rtx_out_high = (VCCI – VOH) / $I_{OH}$ and Rtx_out_low = VOL / $I_{OL}$).

Example 1 (high speed, high current):

Rtx_out_high = Rtx_out_low = 10 Ω

R1 = 36 Ω (±5%), P(r1)min = 0.069 Ω

R2 = 82 Ω (±5%), P(r2)min = 0.158 Ω

Imax_tx = 5.5 V / (82 × 0.95 + 36 × 0.95 + 10) = 45.04 mA

$t_{RISE}$ = $t_{FALL}$ = 0.85 ns at C_pad_load = 10 pF (includes up to 25% safety margin)

$t_{RISE}$ = $t_{FALL}$ = 4 ns at C_pad_load = 50 pF (includes up to 25% safety margin)

Example 2 (low–medium speed, medium current):

Rtx_out_high = Rtx_out_low = 10 Ω

R1 = 220 Ω (±5%), P(r1)min = 0.018 Ω

R2 = 390 Ω (±5%), P(r2)min = 0.032 Ω

Imax_tx = 5.5 V / (220 × 0.95 + 390 × 0.95 + 10) = 9.17 mA

$t_{RISE} = t_{FALL}$ = 4 ns at C_pad_load = 10 pF (includes up to 25% safety margin)

$t_{RISE} = t_{FALL}$ = 20 ns at C_pad_load = 50 pF (includes up to 25% safety margin)

Other values of resistors are also allowed as long as the resistors are sized appropriately to limit the voltage at the receiving end to 2.5 V < Vin (rx) < 3.6 V when the transmitter sends a logic 1. This range of Vin_dc(rx) must be assured for any combination of transmitter supply (5 V ± 0.5 V), transmitter output resistance, and board resistor tolerances.

Temporary overshoots are allowed according to the overshoot and undershoot table in the datasheet.

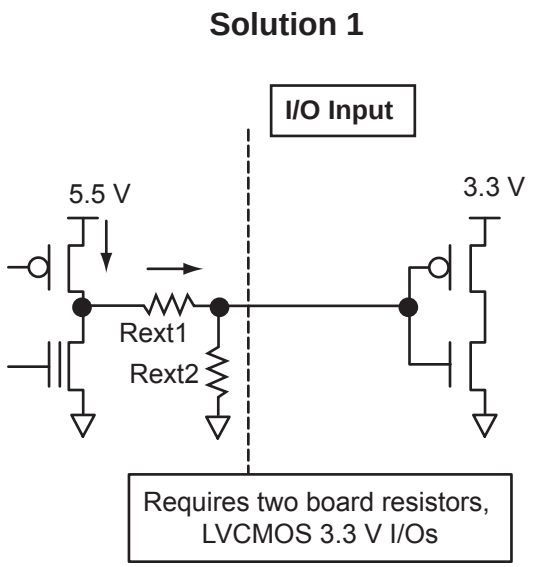


***Figure 7-5*** **• Solution 1**

### Solution 2

This solution requires one board resistor and one Zener 3.3 V diode, as demonstrated in Figure 7-6.

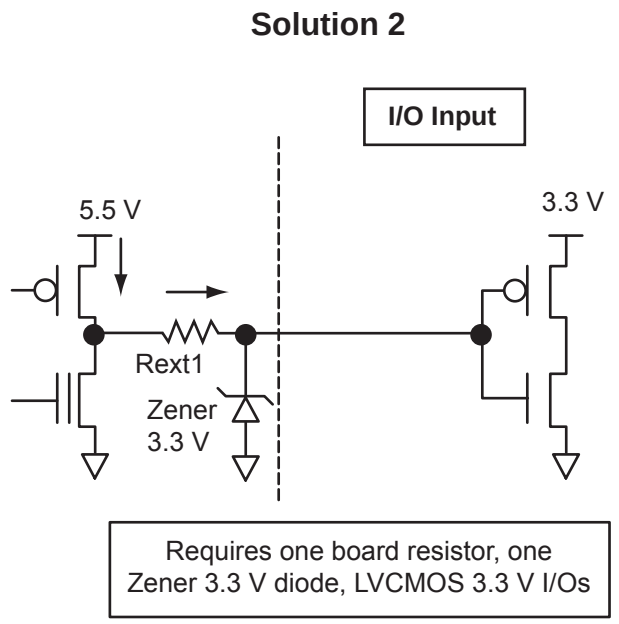


***Figure 7-6*** **• Solution 2**

### Solution 3

This solution requires a bus switch on the board, as demonstrated in Figure 7-7.

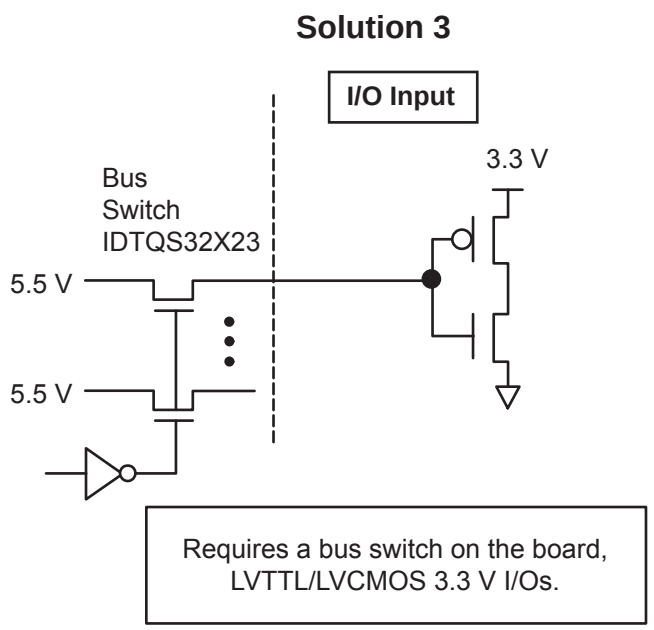


***Figure 7-7*** **• Solution 3**

***Table 7-13* • Comparison Table for 5 V–Compliant Receiver Solutions**

| Solution | Board Components | Speed | Current Limitations |
|---|---|---|---|
| 1 | Two resistors | Low to High[1] | Limited by transmitter's drive strength |
| 2 | Resistor and Zener 3.3 V | Medium | Limited by transmitter's drive strength |
| 3 | Bus switch | High | N/A |

*Notes:*

1. *Speed and current consumption increase as the board resistance values decrease.*
2. *Resistor values ensure I/O diode long-term reliability.*
3. *At 70°C, customers could still use 420 Ω on every I/O.*
4. *At 85°C, a 5 V solution on every other I/O is permitted, since the resistance is lower (150 Ω ) and the current is higher. Also, the designer can still use 420 Ω and use the solution on every I/O.*
5. *At 100°C, the 5 V solution on every I/O is permitted, since 420 Ω are used to limit the current to 5.9 mA.*

### *5 V Output Tolerance*

nano Standard I/Os must be set to 3.3 V LVTTL or 3.3 V LVCMOS mode to reliably drive 5 V TTL receivers. It is also critical that there be NO external I/O pull-up resistor to 5 V, since this resistor would pull the I/O pad voltage beyond the 3.6 V absolute maximum value and consequently cause damage to the I/O.

When set to 3.3 V LVTTL or 3.3 V LVCMOS mode, the I/Os can directly drive signals into 5 V TTL receivers. In fact, $V_{OL}$ = 0.4 V and $V_{OH}$ = 2.4 V in both 3.3 V LVTTL and 3.3 V LVCMOS modes exceeds the $V_{IL}$ = 0.8 V and $V_{IH}$ = 2 V level requirements of 5 V TTL receivers. Therefore, level 1 and level 0 will be recognized correctly by 5 V TTL receivers.

## Schmitt Trigger

A Schmitt trigger is a buffer used to convert a slow or noisy input signal into a clean one before passing it to the FPGA. Using Schmitt trigger buffers guarantees a fast, noise-free input signal to the FPGA.

nano devices have Schmitt triggers built into their I/O circuitry. Schmitt Trigger is available on all I/O configurations.

This feature can be implemented by using a Physical Design Constraints (PDC) command (Table 7-5 on page 163) or by selecting a check box in the I/O Attribute Editor in Designer. The check box is cleared by default.

## I/O Register Combining

Every I/O has several embedded registers in the I/O tile that are close to the I/O pads. Rather than using the internal register from the core, the user has the option of using these registers for faster clock-to-out timing, and external hold and setup. When combining these registers at the I/O buffer, some architectural rules must be met. Provided these rules are met, the user can enable register combining globally during Compile (as shown in the "Compiling the Design" section in the "I/O Software Control in Low Power Flash Devices" section on page 185.

This feature is supported by all I/O standards.

### *Rules for Registered I/O Function:*

1. The fanout between an I/O pin (D, Y, or E) and a register must be equal to one for combining to be considered on that pin.
2. All registers (Input, Output, and Output Enable) connected to an I/O must share the same clear or preset function:
   – If one of the registers has a CLR pin, all the other registers that are candidates for combining in the I/O must have a CLR pin.

- If one of the registers has a PRE pin, all the other registers that are candidates for combining in the I/O must have a PRE pin.
- If one of the registers has neither a CLR nor a PRE pin, all the other registers that are candidates for combining must have neither a CLR nor a PRE pin.
- If the clear or preset pins are present, they must have the same polarity.
- If the clear or preset pins are present, they must be driven by the same signal (net).

3. For single-tile devices (10 k, 15 k, and 20 k): Registers connected to an I/O on the Output and Output Enable pins must have the same clock function (both CLR and CLK are shared among all registers):
   - Both the Output and Output Enable registers must not have an E pin (clock enable).
4. For dual-tile devices (60 k, 125 k, and 250 k): Registers connected to an I/O on the Output and Output Enable pins must have the same clock and enable function:
   - Both the Output and Output Enable registers must have an E pin (clock enable), or none at all.
   - If the E pins are present, they must have the same polarity. The CLK pins must also have the same polarity.

   In some cases, the user may want registers to be combined with the input of a bibuf while maintaining the output as-is. This can be achieved by using PDC commands as follows:

```
set_io <signal name> -REGISTER yes ------register will combine
set_preserve <signal name> ----register will not combine
```

## Weak Pull-Up and Weak Pull-Down Resistors

nano devices support optional weak pull-up and pull-down resistors on each I/O pin. When the I/O is pulled up, it is connected to the $V_{CCI}$ of its corresponding I/O bank. When it is pulled down, it is connected to GND. Refer to the datasheet for more information.

For low power applications and when using IGLOO nano devices, configuration of the pull-up or pull-down of the I/O can be used to set the I/O to a known state while the device is in Flash*Freeze mode. Refer to "Flash*Freeze Technology and Low Power Modes" in an applicable FPGA fabric user's guide for more information.

The Flash*Freeze (FF) pin cannot be configured with a weak pull-down or pull-up I/O attribute, as the signal needs to be driven at all times.

## Output Slew Rate Control

The slew rate is the amount of time an input signal takes to get from logic LOW to logic HIGH or vice versa.

It is commonly defined as the propagation delay between 10% and 90% of the signal's voltage swing. Slew rate control is available for the output buffers of low power flash devices. The output buffer has a programmable slew rate for both HIGH-to-LOW and LOW-to-HIGH transitions.

The slew rate can be implemented by using a PDC command (Table 7-5 on page 163), setting it "High" or "Low" in the I/O Attribute Editor in Designer, or instantiating a special I/O macro. The default slew rate value is "High."

Microsemi recommends the high slew rate option to minimize the propagation delay. This high-speed option may introduce noise into the system if appropriate signal integrity measures are not adopted. Selecting a low slew rate reduces this kind of noise but adds some delays in the system. Low slew rate is recommended when bus transients are expected.

## Output Drive

The output buffers of nano devices can provide multiple drive strengths to meet signal integrity requirements. The LVTTL and LVCMOS (except 1.2 V LVCMOS) standards have selectable drive strengths.

Drive strength should also be selected according to the design requirements and noise immunity of the system.

Refer to Table 7-10 on page 169 for more information about the slew rate and drive strength specification for LVTTL/LVCMOS 3.3 V, LVCMOS 2.5 V, LVCMOS 1.8 V, LVCMOS 1.5 V, and LVCMOS 1.2 V output buffers.

***Table 7-14* • nano Output Drive and Slew**

| I/O Standards | 2 mA | 4 mA | 6 mA | 8 mA | Slew | |
|---|---|---|---|---|---|---|
| LVTTL / LVCMOS 3.3 V | ✓ | ✓ | ✓ | ✓ | High | Low |
| LVCMOS 2.5 V | ✓ | ✓ | ✓ | ✓ | High | Low |
| LVCMOS 1.8 V | ✓ | ✓ | – | – | High | Low |
| LVCMOS 1.5 V | ✓ | – | – | – | High | Low |
| LVCMOS 1.2 V | ✓ | – | – | – | High | Low |

# Simultaneously Switching Outputs (SSOs) and Printed Circuit Board Layout

Each I/O voltage bank has a separate ground and power plane for input and output circuits. This isolation is necessary to minimize simultaneous switching noise from the input and output (SSI and SSO). The switching noise (ground bounce and power bounce) is generated by the output buffers and transferred into input buffer circuits, and vice versa.

SSOs can cause signal integrity problems on adjacent signals that are not part of the SSO bus. Both inductive and capacitive coupling parasitics of bond wires inside packages and of traces on PCBs will transfer noise from SSO busses onto signals adjacent to those busses. Additionally, SSOs can produce ground bounce noise and VCCI dip noise. These two noise types are caused by rapidly changing currents through GND and VCCI package pin inductances during switching activities (EQ 1 and EQ 2).

$$\text{Ground bounce noise voltage} = L(GND) \times di/dt \qquad \textit{EQ 1}$$

$$\text{VCCI dip noise voltage} = L(VCCI) \times di/dt \qquad \textit{EQ 2}$$

Any group of four or more input pins switching on the same clock edge is considered an SSO bus. The shielding should be done both on the board and inside the package unless otherwise described.

In-package shielding can be achieved in several ways; the required shielding will vary depending on whether pins next to the SSO bus are LVTTL/LVCMOS inputs or LVTTL/LVCMOS outputs. Board traces in the vicinity of the SSO bus have to be adequately shielded from mutual coupling and inductive noise that can be generated by the SSO bus. Also, noise generated by the SSO bus needs to be reduced inside the package.

PCBs perform an important function in feeding stable supply voltages to the IC and, at the same time, maintaining signal integrity between devices.

Key issues that need to be considered are as follows:

- Power and ground plane design and decoupling network design
- Transmission line reflections and terminations

For extensive data per package on the SSO and PCB issues, refer to the "ProASIC3/E SSO and Pin Placement and Guidelines" chapter of the *ProASIC3 Device Family User's Guide*.

# I/O Software Support

In Microsemi's Libero software, default settings have been defined for the various I/O standards supported. Changes can be made to the default settings via the use of attributes; however, not all I/O attributes are applicable for all I/O standards.

***Table 7-15* • nano I/O Attributes vs. I/O Standard Applications**

| I/O Standard | SLEW (output only) | OUT_DRIVE (output only) | RES_PULL | OUT_LOAD (output only) | | Schmitt Trigger | Hold State | Combine Register |
|---|---|---|---|---|---|---|---|---|
| | | | | IGLOO nano | ProASIC 3 nano | | | |
| LVTTL/ LVCMOS3.3 | ✓ | ✓ (8) | ✓ | ✓ | ✓ | ✓ | ✓ | ✓ |
| LVCMOS2.5 | ✓ | ✓ (8) | ✓ | ✓ | ✓ | ✓ | ✓ | ✓ |
| LVCMOS1.8 | ✓ | ✓ (4) | ✓ | ✓ | ✓ | ✓ | ✓ | ✓ |
| LVCMOS1.5 | ✓ | ✓ (2) | ✓ | ✓ | ✓ | ✓ | ✓ | ✓ |
| LVCMOS1.2 | ✓ | ✓ (2) | ✓ | ✓ | – | ✓ | ✓ | ✓ |
| Software Defaults | HIGH | Refer to numbers in parentheses in above cells. | None | All Devices: 5 pF | 10 pF or 35 pF* | Off | Off | No |

*Note: *10 pF for A3PN010, A3PN015, and A3PN020; 35 pF for A3PN060, A3PN125, and A3PN250.*

# User I/O Naming Convention

Due to the comprehensive and flexible nature of nano Standard I/Os, a naming scheme is used to show the details of each I/O (Figure 7-8). The name identifies to which I/O bank it belongs.

I/O Nomenclature = FF/Gmn/IOuxwBy

Gmn is only used for I/Os that also have CCC access—i.e., global pins.

FF = Indicates the I/O dedicated for the Flash*Freeze mode activation pin

G = Global

m = Global pin location associated with each CCC on the device: A (northwest corner), B (northeast corner), C (east middle), D (southeast corner), E (southwest corner), and F (west middle)

n = Global input MUX and pin number of the associated Global location m—either A0, A1, A2, B0, B1, B2, C0, C1, or C2. Refer to the "Global Resources in Low Power Flash Devices" section on page 31 for information about the three input pins per clock source MUX at CCC location m.

u = I/O pair number in the bank, starting at 00 from the northwest I/O bank and proceeding in a clockwise direction

x = R (Regular—single-ended) for the I/Os that support single-ended standards.

w = S (Single-Ended)

B = Bank

y = Bank number (0–3). The Bank number starts at 0 from the northwest I/O bank and proceeds in a clockwise direction.

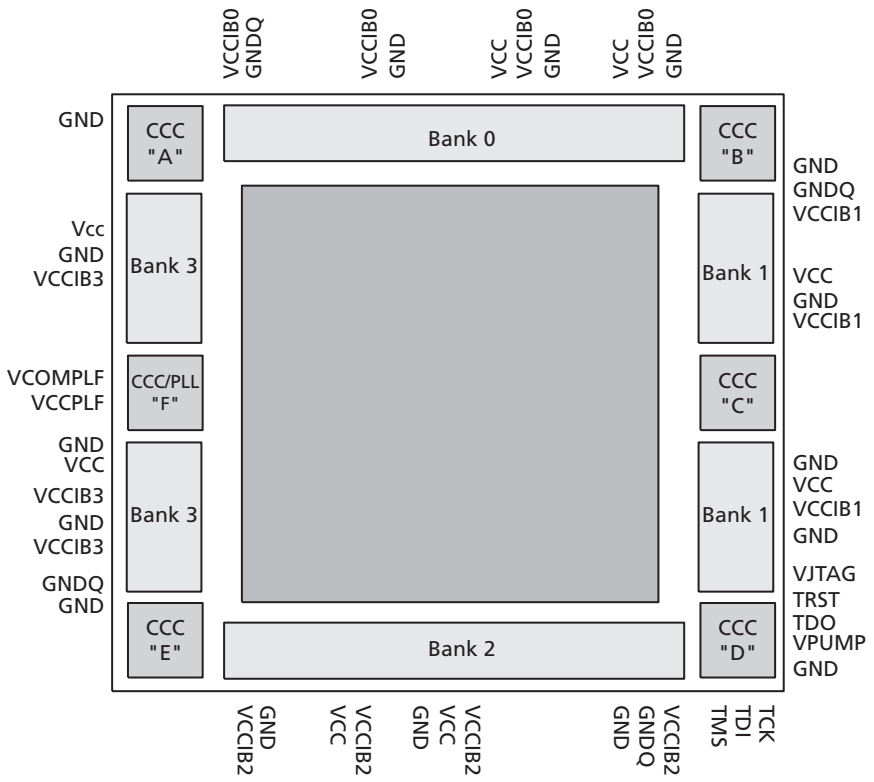


***Figure 7-8* • I/O Naming Conventions for nano Devices – Top View**

# I/O Bank Architecture and CCC Naming Conventions

The nano products feature varying bank architectures which have been optimized to balance silicon area with I/O and clocking flexibility. The A standard naming scheme is used to illustrate the I/O Bank architecture and the CCCs associated with each architecture.

***Table 7-16* • A Standard Naming Scheme**

| Name | Description |
|---|---|
| Bank x | Refers to the specific bank number within which an I/O resides |
| CCC | Clock Condition Circuit with simple clock delay operations as well as clock spine access |
| CCC-GL | Clock Condition Circuit with Global Locations for chip reach clocking. These CCCs support programmable delays but do not have an integrated PLL. |
| CCC-PLL | Clock Condition Circuit with integrated PLL and programmable delays |
| Chip Reach | Access to chip global lines |
| Quadrant Reach | Access to quadrant global lines |

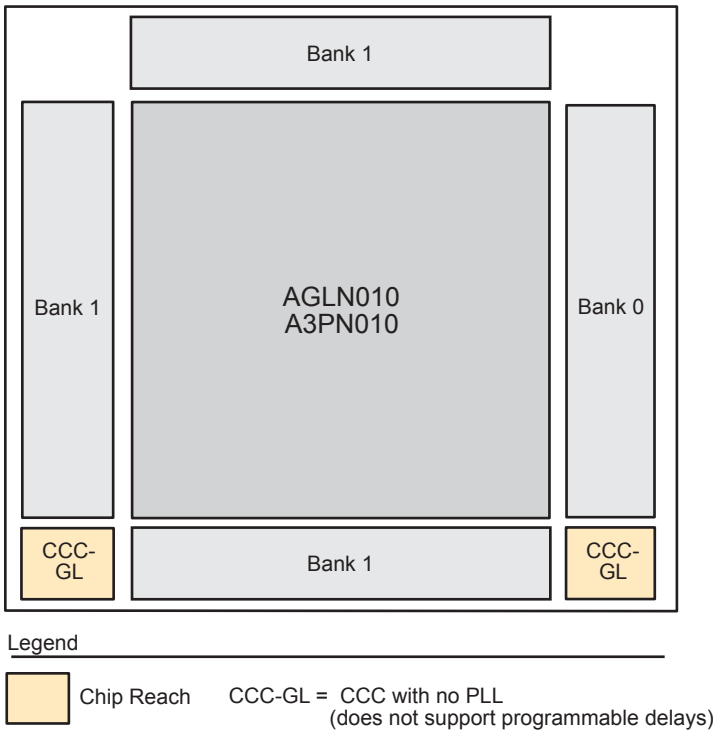


***Figure 7-9* • I/O Bank Architecture of AGLN010 and A3PN010 Devices**

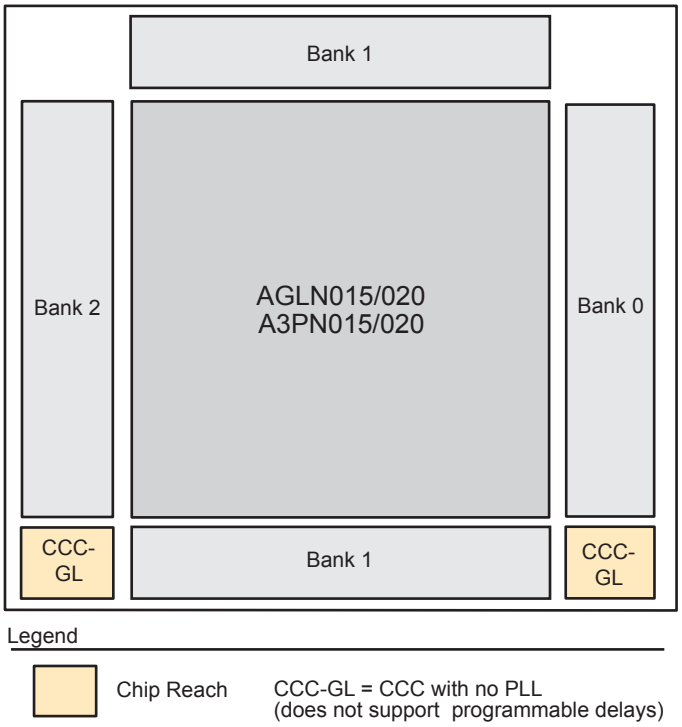


***Figure 7-10*** **• I/O Bank Architecture of AGLN015/020 and A3PN015/020 Devices**

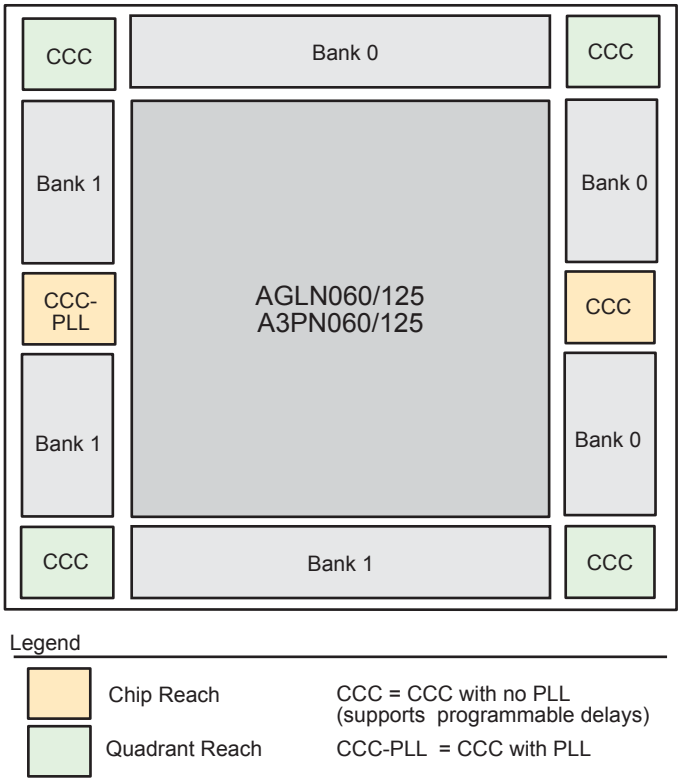


***Figure 7-11*** **• I/O Bank Architecture of AGLN060/125 and A3PN060/125 Devices**

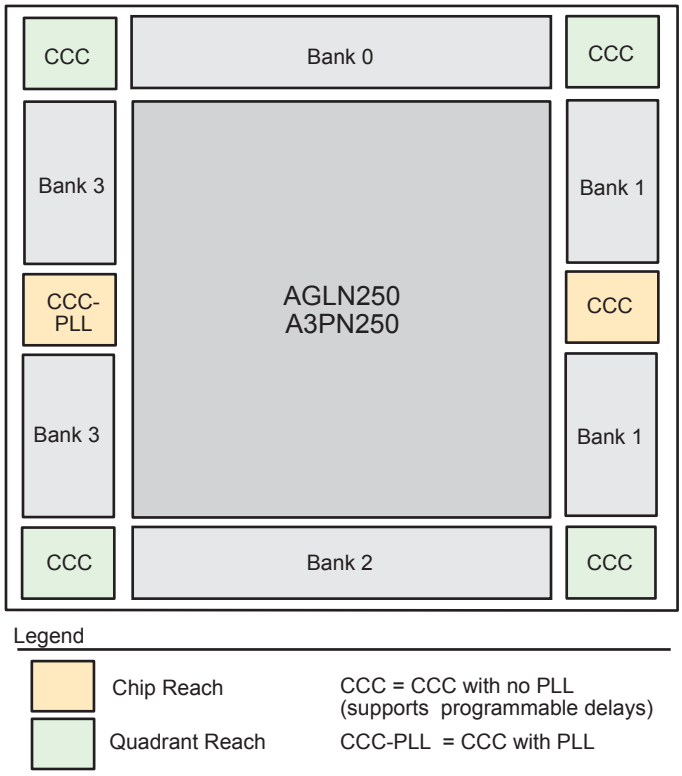


***Figure 7-12*** **• I/O Bank Architecture of AGLN250/A3PN250 Devices**

# Board-Level Considerations

Low power flash devices have robust I/O features that can help in reducing board-level components. The devices offer single-chip solutions, which makes the board layout simpler and more immune to signal integrity issues. Although, in many cases, these devices resolve board-level issues, special attention should always be given to overall signal integrity. This section covers important board-level considerations to facilitate optimum device performance.

## Termination

Proper termination of all signals is essential for good signal quality. Nonterminated signals, especially clock signals, can cause malfunctioning of the device.

For general termination guidelines, refer to the *Board-Level Considerations* application note for Microsemi FPGAs. Also refer to the "Pin Descriptions and Packaging" chapter of the appropriate device datasheet for termination requirements for specific pins.

Low power flash I/Os are equipped with on-chip pull-up/-down resistors. The user can enable these resistors by instantiating them either in the top level of the design (refer to the *IGLOO, ProASIC3, SmartFusion, and Fusion Macro Library Guide* for the available I/O macros with pull-up/-down) or in the I/O Attribute Editor in Designer if generic input or output buffers are instantiated in the top level. Unused I/O pins are configured as inputs with pull-up resistors.

As mentioned earlier, low power flash devices have multiple programmable drive strengths, and the user can eliminate unwanted overshoot and undershoot by adjusting the drive strengths.

## Power-Up Behavior

Low power flash devices are power-up/-down friendly; i.e., no particular sequencing is required for power-up and power-down. This eliminates extra board components for power-up sequencing, such as a power-up sequencer.

During power-up, all I/Os are tristated, irrespective of I/O macro type (input buffers, output buffers, I/O buffers with weak pull-ups or weak pull-downs, etc.). Once I/Os become activated, they are set to the user-selected I/O macros. Refer to the "Power-Up/-Down Behavior of Low Power Flash Devices" section on page 307 for details.

## Drive Strength

Low power flash devices have up to four programmable output drive strengths. The user can select the drive strength of a particular output in the I/O Attribute Editor or can instantiate a specialized I/O macro, such as OUTBUF_S_8 (slew = low, out_drive = 8 mA).

The maximum available drive strength is 8 mA per I/O. Though no I/O should be forced to source or sink more than 8 mA indefinitely, I/Os may handle a higher amount of current (refer to the device IBIS model for maximum source/sink current) during signal transition (AC current). Every device package has its own power dissipation limit; hence, power calculation must be performed accurately to determine how much current can be tolerated per I/O within that limit.

## I/O Interfacing

Low power flash devices are 5 V–input– and 5 V–output–tolerant without adding any extra circuitry. Along with other low-voltage I/O macros, this 5 V tolerance makes these devices suitable for many types of board component interfacing.

Table 7-17 shows some high-level interfacing examples using low power flash devices.

***Table 7-17* • nano High-Level Interface**

| Interface | Clock | | I/O | | | |
|---|---|---|---|---|---|---|
| | Type | Frequency | Type | Signals In | Signals Out | Data I/O |
| GM | Src Sync | 125 MHz | LVTTL | 8 | 8 | 125 Mbps |
| TBI | Src Sync | 125 MHz | LVTTL | 10 | 10 | 125 Mbps |

# Conclusion

IGLOO nano and ProASIC3 nano device support for multiple I/O standards minimizes board-level components and makes possible a wide variety of applications. The Microsemi Designer software, integrated with Libero SoC, presents a clear visual display of I/O assignments, allowing users to verify I/O and board-level design requirements before programming the device. The nano device I/O features and functionalities ensure board designers can produce low-cost and low power FPGA applications fulfilling the complexities of contemporary design needs.

# Related Documents

## Application Notes

*Board-Level Considerations*

http://www.microsemi.com/soc/documents/ALL_AC276_AN.pdf

## User's Guides

*Libero SoC User's Guide*

http://www.microsemi.com/soc/documents/libero_ug.pdf

*IGLOO, ProASIC3, SmartFusion, and Fusion Macro Library Guide*

http://www.microsemi.com/soc/documents/pa3_libguide_ug.pdf

*SmartGen Core Reference Guide*

http://www.microsemi.com/soc/documents/genguide_ug.pdf

# List of Changes

The following table lists critical changes that were made in each revision of the document.

| Date | Changes | Page |
|---|---|---|
| August 2012 | Figure 7-2 • I/O Block Logical Representation for Dual-Tile Designs (60 k,125 k, and 250 k Devices) was revised to indicate that resets on registers 1, 3, 4, and 5 are active high rather than active low (SAR 40698). | 160 |
| | The hyperlink for the *Board-Level Considerations* application note was corrected (SAR 36663). | 181, 183 |
| June 2011 | Figure 7-2 • I/O Block Logical Representation for Dual-Tile Designs (60 k,125 k, and 250 k Devices) was revised so that the I/O_CLR and I/O_OCLK nets are no longer joined in front of Input Register 3 but instead on the branch of the CLR/PRE signal (SAR 26052). | 160 |
| | The following sentence was removed from the "LVCMOS (Low-Voltage CMOS)" section (SAR 22634): "All these versions use a 3.3 V–tolerant CMOS input buffer and a push-pull output buffer." | 166 |
| | The "5 V Input Tolerance" section was revised to state that 5 V input tolerance can be used with LVTTL 3.3 V and LVCMOS 3.3 V configurations. LVCMOS 2.5 V, LVCMOS 1.8 V, LVCMOS 1.5 V, and LVCMOS 1.2 V were removed from the sentence listing supported configurations (SAR 22427). | 171 |

# 8 – I/O Software Control in Low Power Flash Devices

Fusion, IGLOO, and ProASIC3 I/Os provide more design flexibility, allowing the user to control specific features by enabling certain I/O standards. Some features are selectable only for certain I/O standards, whereas others are available for all I/O standards. For example, slew control is not supported by differential I/O standards. Conversely, I/O register combining is supported by all I/O standards. For detailed information about which I/O standards and features are available on each device and each I/O type, refer to the I/O Structures section of the handbook for the device you are using.

Figure 8-1 shows the various points in the software design flow where a user can provide input or control of the I/O selection and parameters. A detailed description is provided throughout this document.

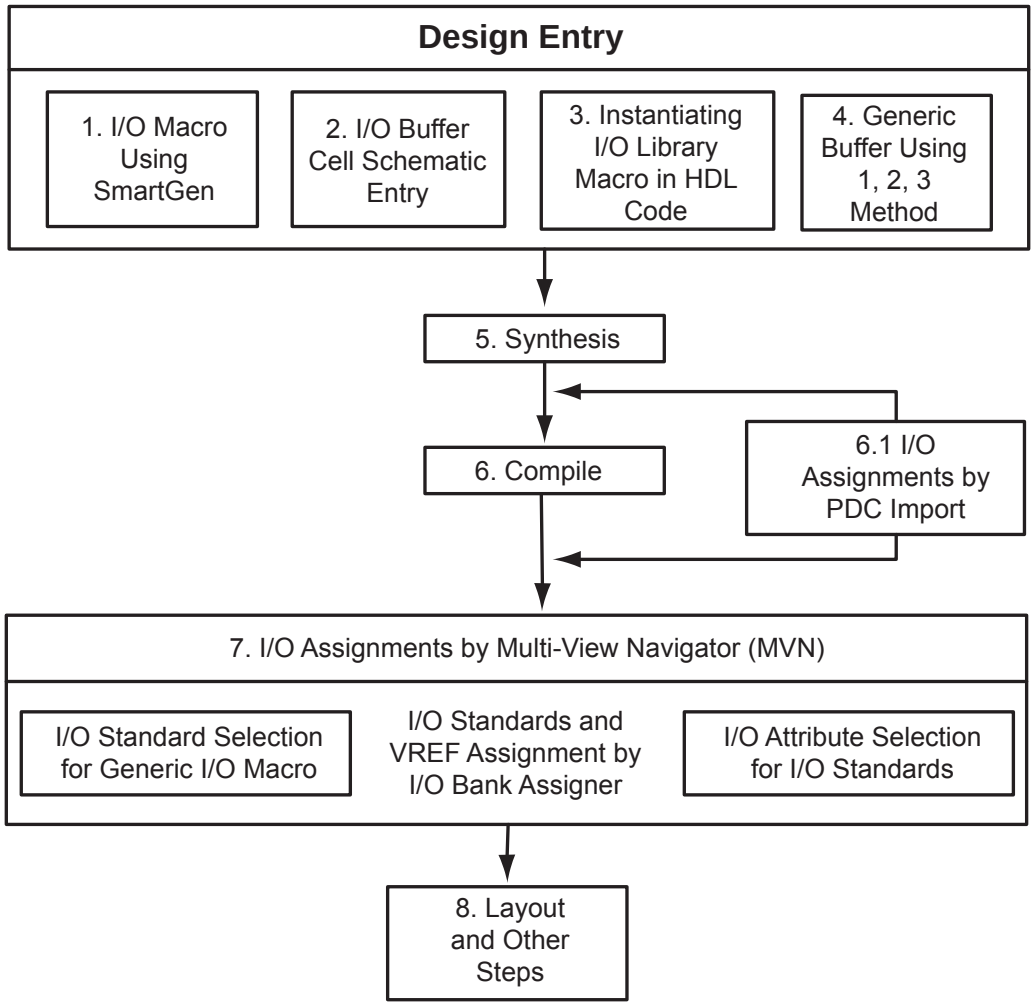


***Figure 8-1*** **• User I/O Assignment Flow Chart**

# Flash FPGAs I/O Support

The flash FPGAs listed in Table 8-1 support I/Os and the functions described in this document.

***Table 8-1* • Flash-Based FPGAs**

| Series | Family* | Description |
|---|---|---|
| IGLOO | IGLOO | Ultra-low power 1.2 V to 1.5 V FPGAs with Flash*Freeze technology |
| | IGLOOe | Higher density IGLOO FPGAs with six PLLs and additional I/O standards |
| | IGLOO nano | The industry's lowest-power, smallest-size solution |
| | IGLOO PLUS | IGLOO FPGAs with enhanced I/O capabilities |
| ProASIC3 | ProASIC3 | Low power, high-performance 1.5 V FPGAs |
| | ProASIC3E | Higher density ProASIC3 FPGAs with six PLLs and additional I/O standards |
| | ProASIC3 nano | Lowest-cost solution with enhanced I/O capabilities |
| | ProASIC3L | ProASIC3 FPGAs supporting 1.2 V to 1.5 V with Flash*Freeze technology |
| | RT ProASIC3 | Radiation-tolerant RT3PE600L and RT3PE3000L |
| | Military ProASIC3/EL | Military temperature A3PE600L, A3P1000, and A3PE3000L |
| | Automotive ProASIC3 | ProASIC3 FPGAs qualified for automotive applications |
| Fusion | Fusion | Mixed signal FPGA integrating ProASIC3 FPGA fabric, programmable analog block, support for ARM® Cortex™-M1 soft processors, and flash memory into a monolithic device |

*Note: *The device names link to the appropriate datasheet, including product brief, DC and switching characteristics, and packaging information.*

## *IGLOO Terminology*

In documentation, the terms IGLOO series and IGLOO devices refer to all of the IGLOO devices as listed in Table 8-1. Where the information applies to only one product line or limited devices, these exclusions will be explicitly stated.

## *ProASIC3 Terminology*

In documentation, the terms ProASIC3 series and ProASIC3 devices refer to all of the ProASIC3 devices as listed in Table 8-1. Where the information applies to only one product line or limited devices, these exclusions will be explicitly stated.

To further understand the differences between the IGLOO and ProASIC3 devices, refer to the *Industry's Lowest Power FPGAs Portfolio*.

# Software-Controlled I/O Attributes

Users may modify these programmable I/O attributes using the I/O Attribute Editor. Modifying an I/O attribute may result in a change of state in Designer. Table 8-2 details which steps have to be re-run as a function of modified I/O attribute.

***Table 8-2* • Designer State (resulting from I/O attribute modification)**

| | Designer States[1] | | | | |
|---|---|---|---|---|---|
| **I/O Attribute** | **Compile** | **Layout** | **Fuse** | **Timing** | **Power** |
| Slew Control[2] | No | No | Yes | Yes | Yes |
| Output Drive (mA) | No | No | Yes | Yes | Yes |
| Skew Control | No | No | Yes | Yes | Yes |
| Resistor Pull | No | No | Yes | Yes | Yes |
| Input Delay | No | No | Yes | Yes | Yes |
| Schmitt Trigger | No | No | Yes | Yes | Yes |
| OUT_LOAD | No | No | No | Yes | Yes |
| COMBINE_REGISTER | Yes | Yes | N/A | N/A | N/A |

*Notes:*

1. *No = Remains the same, Yes = Re-run the step, N/A = Not applicable*
2. *Skew control does not apply to IGLOO nano, IGLOO PLUS, and ProASIC3 nano devices.*
3. *Programmable input delay is applicable only for ProASIC3E, ProASIC3EL, RT ProASIC3, and IGLOOe devices.*

# Implementing I/Os in Microsemi Software

Microsemi Libero SoC software is integrated with design entry tools such as the SmartGen macro builder, the ViewDraw schematic entry tool, and an HDL editor. It is also integrated with the synthesis and Designer tools. In this section, all necessary steps to implement the I/Os are discussed.

## Design Entry

There are three ways to implement I/Os in a design:

1. Use the SmartGen macro builder to configure I/Os by generating specific I/O library macros and then instantiating them in top-level code. This is especially useful when creating I/O bus structures.
2. Use an I/O buffer cell in a schematic design.
3. Manually instantiate specific I/O macros in the top-level code.

If technology-specific macros, such as INBUF_LVCMOS33 and OUTBUF_PCI, are used in the HDL code or schematic, the user will not be able to change the I/O standard later on in Designer. If generic I/O macros are used, such as INBUF, OUTBUF, TRIBUF, CLKBUF, and BIBUF, the user can change the I/O standard using the Designer I/O Attribute Editor tool.

### *Using SmartGen for I/O Configuration*

The SmartGen tool in Libero SoC provides a GUI-based method of configuring the I/O attributes. The user can select certain I/O attributes while configuring the I/O macro in SmartGen. The steps to configure an I/O macro with specific I/O attributes are as follows:

1. Open Libero SoC.
2. On the left-hand side of the Catalog View, select **I/O**, as shown in Figure 8-2.

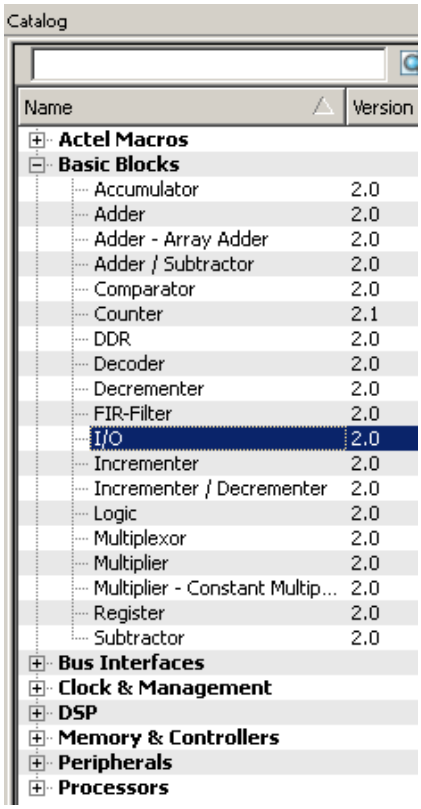


***Figure 8-2* • SmartGen Catalog**

3. Double-click I/O to open the Create Core window, which is shown in Figure 8-3).

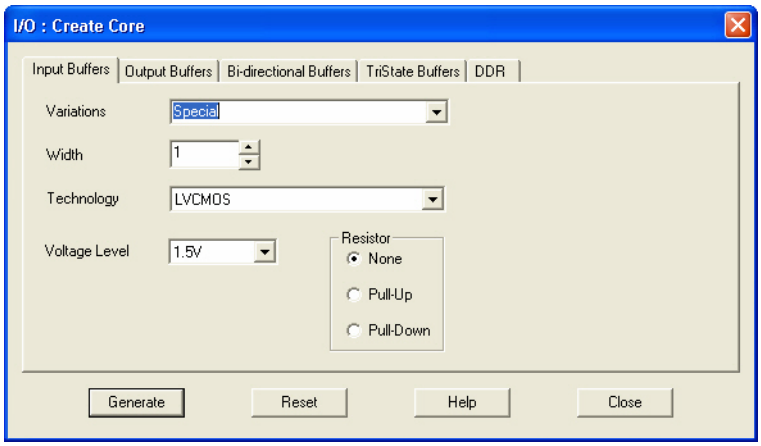


***Figure 8-3* • I/O Create Core Window**

As seen in Figure 8-3, there are five tabs to configure the I/O macro: Input Buffers, Output Buffers, Bidirectional Buffers, Tristate Buffers, and DDR.

### Input Buffers

There are two variations: Regular and Special.

If the **Regular** variation is selected, only the Width (1 to 128) needs to be entered. The default value for Width is 1.

The **Special** variation has Width, Technology, Voltage Level, and Resistor Pull-Up/-Down options (see Figure 8-3). All the I/O standards and supply voltages ($V_{CCI}$) supported for the device family are available for selection.

### Output Buffers

There are two variations: Regular and Special.

If the **Regular** variation is selected, only the Width (1 to 128) needs to be entered. The default value for Width is 1.

The **Special** variation has Width, Technology, Output Drive, and Slew Rate options.

### Bidirectional Buffers

There are two variations: Regular and Special.

The **Regular** variation has Enable Polarity (Active High, Active Low) in addition to the Width option.

The **Special** variation has Width, Technology, Output Drive, Slew Rate, and Resistor Pull-Up/-Down options.

### Tristate Buffers

Same as Bidirectional Buffers.

### DDR

There are eight variations: DDR with Regular Input Buffers, Special Input Buffers, Regular Output Buffers, Special Output Buffers, Regular Tristate Buffers, Special Tristate Buffers, Regular Bidirectional Buffers, and Special Bidirectional Buffers.

These variations resemble the options of the previous I/O macro. For example, the Special Input Buffers variation has Width, Technology, Voltage Level, and Resistor Pull-Up/-Down options. DDR is not available on IGLOO PLUS devices.

4. Once the desired configuration is selected, click the **Generate** button. The Generate Core window opens (Figure 8-4).
5. Enter a name for the macro. Click **OK**. The core will be generated and saved to the appropriate location within the project files (Figure 8-5 on page 191).

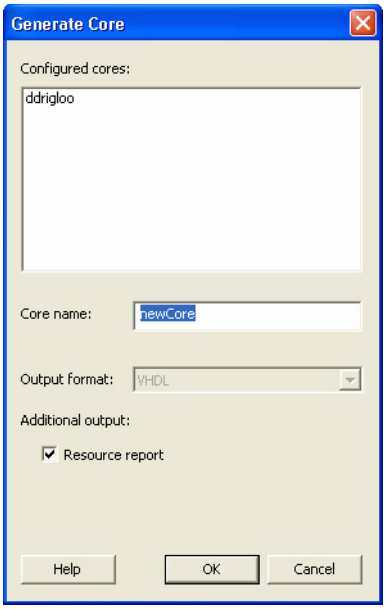


***Figure 8-4*** **• Generate Core Window**

6. Instantiate the I/O macro in the top-level code.

   The user must instantiate the DDR_REG or DDR_OUT macro in the design. Use SmartGen to generate both these macros and then instantiate them in your top level. To combine the DDR macros with the I/O, the following rules must be met:

### Rules for the DDR I/O Function

- The fanout between an I/O pin (D or Y) and a DDR (DDR_REG or DDR_OUT) macro must be equal to one for the combining to happen on that pin.
- If a DDR_REG macro and a DDR_OUT macro are combined on the same bidirectional I/O, they must share the same clear signal.
- Registers will not be combined in an I/O in the presence of DDR combining on the same I/O.

## *Using the I/O Buffer Schematic Cell*

Libero SoC software includes the ViewDraw schematic entry tool. Using ViewDraw, the user can insert any supported I/O buffer cell in the top-level schematic. Figure 8-5 shows a top-level schematic with different I/O buffer cells. When synthesized, the netlist will contain the same I/O macro.

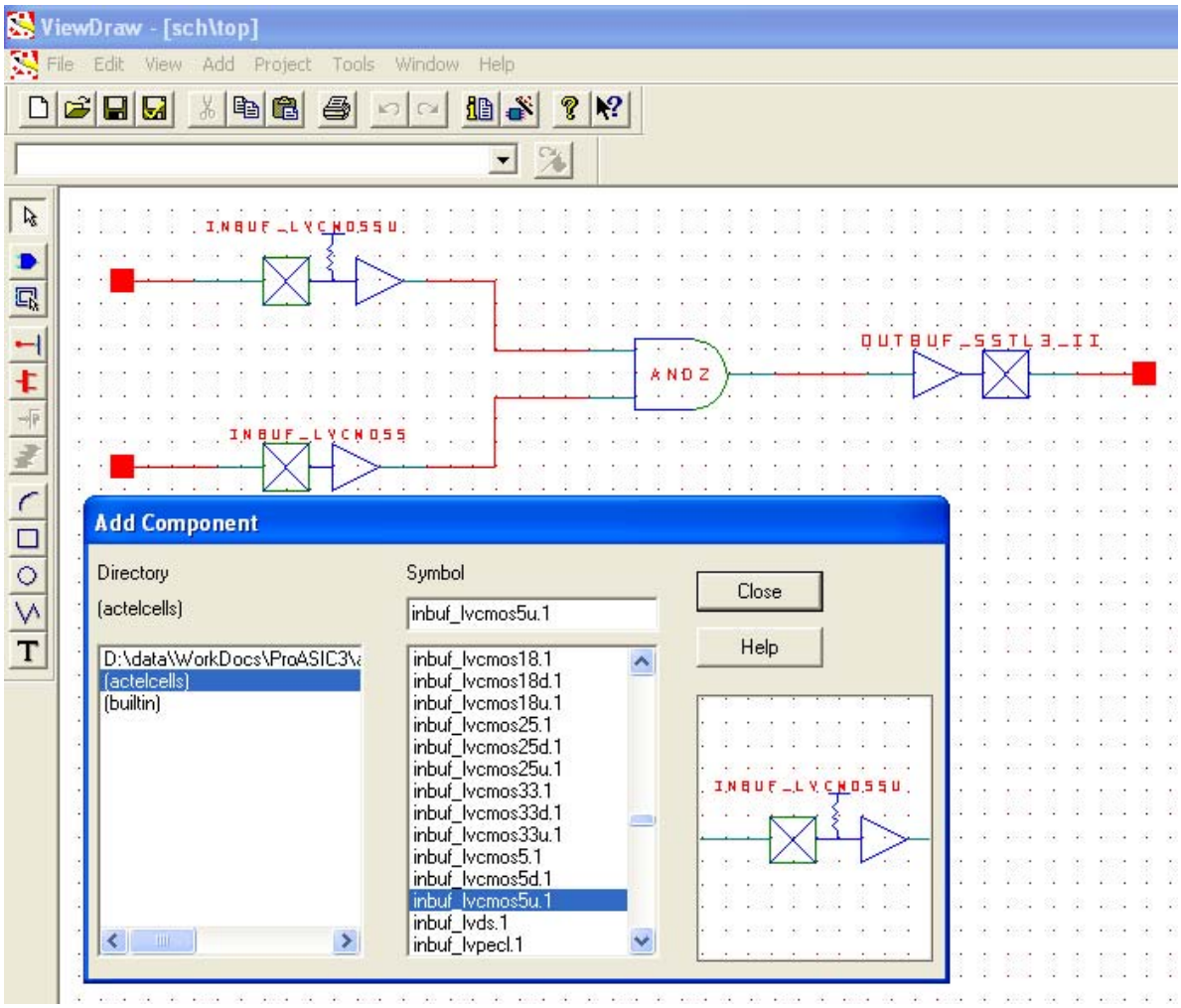


***Figure 8-5* • I/O Buffer Schematic Cell Usage**

### Instantiating in HDL code

All the supported I/O macros can be instantiated in the top-level HDL code (refer to the *IGLOO, ProASIC3, SmartFusion, and Fusion Macro Library Guide* for a detailed list of all I/O macros). The following is an example:

```
library ieee;
use ieee.std_logic_1164.all;
library proasic3e;

entity TOP is
  port(IN2, IN1 : in std_logic; OUT1 : out std_logic);
end TOP;

architecture DEF_ARCH of TOP is

  component INBUF_LVCMOS5U
    port(PAD : in std_logic := 'U'; Y : out std_logic);
  end component;

  component INBUF_LVCMOS5
    port(PAD : in std_logic := 'U'; Y : out std_logic);
  end component;

  component OUTBUF_SSTL3_II
    port(D : in std_logic := 'U'; PAD : out std_logic);
  end component;

  Other component …..

signal x, y, z…….other signals : std_logic;

begin

  I1 : INBUF_LVCMOS5U
    port map(PAD => IN1, Y =>x);
  I2 : INBUF_LVCMOS5
    port map(PAD => IN2, Y => y);
  I3 : OUTBUF_SSTL3_II
    port map(D => z, PAD => OUT1);

  other port mapping…

end DEF_ARCH;
```

## Synthesizing the Design

Libero SoC integrates with the Synplify® synthesis tool. Other synthesis tools can also be used with Libero SoC. Refer to the *Libero SoC User's Guide* or Libero online help for details on how to set up the Libero tool profile with synthesis tools from other vendors.

During synthesis, the following rules apply:

- Generic macros:
  - Users can instantiate generic INBUF, OUTBUF, TRIBUF, and BIBUF macros.
  - Synthesis will automatically infer generic I/O macros.
  - The default I/O technology for these macros is LVTTL.
  - Users will need to use the I/O Attribute Editor in Designer to change the default I/O standard if needed (see Figure 8-6 on page 193).
- Technology-specific I/O macros:
  - Technology-specific I/O macros, such as INBUF_LVCMO25 and OUTBUF_GTL25, can be instantiated in the design. Synthesis will infer these I/O macros in the netlist.

– The I/O standard of technology-specific I/O macros cannot be changed in the I/O Attribute Editor (see Figure 8-6).
– The user MUST instantiate differential I/O macros (LVDS/LVPECL) in the design. This is the only way to use these standards in the design (IGLOO nano and ProASIC3 nano devices do not support differential inputs).
– To implement the DDR I/O function, the user must instantiate a DDR_REG or DDR_OUT macro. This is the only way to use a DDR macro in the design.

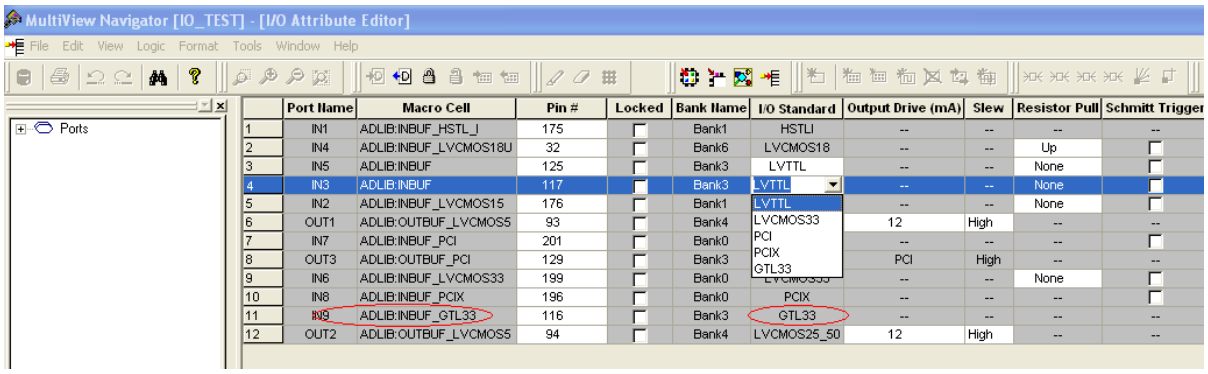


***Figure 8-6* • Assigning a Different I/O Standard to the Generic I/O Macro**

## Performing Place-and-Route on the Design

The netlist created by the synthesis tool should now be imported into Designer and compiled. During Compile, the user can specify the I/O placement and attributes by importing the PDC file. The user can also specify the I/O placement and attributes using ChipPlanner and the I/O Attribute Editor under MVN.

### *Defining I/O Assignments in the PDC File*

A PDC file is a Tcl script file specifying physical constraints. This file can be imported to and exported from Designer.

Table 8-3 shows I/O assignment constraints supported in the PDC file.

***Table 8-3* • PDC I/O Constraints**

| Command | Action | Example | Comment |
|---|---|---|---|
| **I/O Banks Setting Constraints** | | | |
| set_iobank | Sets the I/O supply voltage, $V_{CCI}$, and the input reference voltage, $V_{REF}$, for the specified I/O bank. | `set_iobank bankname [-vcci vcci_voltage] [-vref vref_voltage]`<br><br>`set_iobank Bank7 -vcci 1.50 -vref 0.75` | Must use in case of mixed I/O voltage ($V_{CCI}$) design |
| set_vref | Assigns a $V_{REF}$ pin to a bank. | `set_vref -bank [bankname] [pinnum]`<br><br>`set_vref -bank Bank0 685 704 723 742 761` | Must use if voltage-referenced I/Os are used |
| set_vref_defaults | Sets the default $V_{REF}$ pins for the specified bank. This command is ignored if the bank does not need a $V_{REF}$ pin. | `set_vref_defaults bankname`<br><br>`set_vref_defaults bank2` | |

*Note: Refer to the Libero SoC User's Guide for detailed rules on PDC naming and syntax conventions.*

***Table 8-3* • PDC I/O Constraints (continued)**

| Command | Action | Example | Comment |
|---|---|---|---|
| **I/O Attribute Constraint** | | | |
| set_io | Sets the attributes of an I/O | `set_io portname`<br>`[-pinname value]`<br>`[-fixed value]`<br>`[-iostd value]`<br>`[-out_drive value]`<br>`[-slew value]`<br>`[-res_pull value]`<br>`[-schmitt_trigger value]`<br>`[-in_delay value]`<br>`[-skew value]`<br>`[-out_load value]`<br>`[-register value]`<br><br>`set_io IN2 -pinname 28`<br>`-fixed yes -iostd LVCMOS15`<br>`-out_drive 12 -slew high`<br>`-RES_PULL None`<br>`-SCHMITT_TRIGGER Off`<br>`-IN_DELAY Off –skew off`<br>`-REGISTER No` | If the I/O macro is generic (e.g., INBUF) or technology-specific (INBUF_LVCMOS25), then all I/O attributes can be assigned using this constraint.<br>If the netlist has an I/O macro that specifies one of its attributes, that attribute cannot be changed using this constraint, though other attributes can be changed.<br>Example: OUTBUF_S_24 (low slew, output drive 24 mA)<br>Slew and output drive cannot be changed. |
| **I/O Region Placement Constraints** | | | |
| define_region | Defines either a rectangular region or a rectilinear region | `define_region`<br>`-name [region_name]`<br>`-type [region_type] x1 y1 x2 y2`<br><br>`define_region -name test`<br>`-type inclusive 0 15 2 29` | If any number of I/Os must be assigned to a particular I/O region, such a region can be created with this constraint. |
| assign_region | Assigns a set of macros to a specified region | `assign_region [region name]`<br>`[macro_name...]`<br><br>`assign_region test U12` | This constraint assigns I/O macros to the I/O regions. When assigning an I/O macro, PDC naming conventions must be followed if the macro name contains special characters; e.g., if the macro name is \\$1I19\\, the correct use of escape characters is \\\\\$1I19\\\\. |

*Note: Refer to the Libero SoC User's Guide for detailed rules on PDC naming and syntax conventions.*

## Compiling the Design

During Compile, a PDC I/O constraint file can be imported along with the netlist file. If only the netlist file is compiled, certain I/O assignments need to be completed before proceeding to Layout. All constraints that can be entered in PDC can also be entered using ChipPlanner, I/O Attribute Editor, and PinEditor.

There are certain rules that must be followed in implementing I/O register combining and the I/O DDR macro (refer to the I/O Registers section of the handbook for the device that you are using and the "DDR" section on page 190 for details). Provided these rules are met, the user can enable or disable I/O register combining by using the PDC command `set_io portname -register yes|no` in the I/O Attribute Editor or selecting a check box in the Compile Options dialog box (see Figure 8-7). The Compile Options dialog box appears when the design is compiled for the first time. It can also be accessed by choosing **Options** > **Compile** during successive runs. I/O register combining is off by default. The PDC command overrides the setting in the Compile Options dialog box.

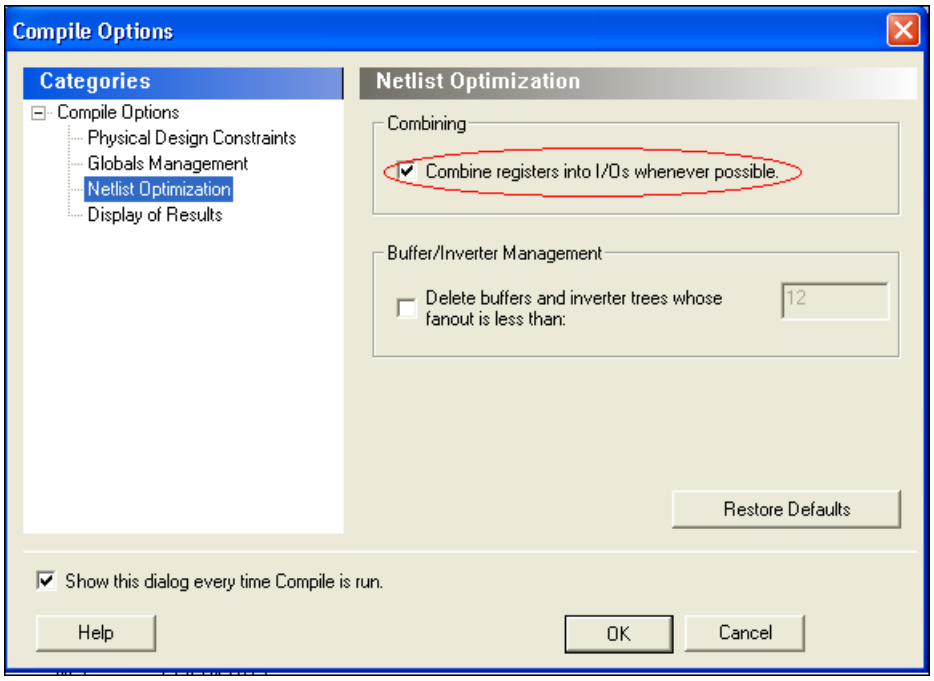


***Figure 8-7*** **• Setting Register Combining During Compile**

## Understanding the Compile Report

The I/O bank report is generated during Compile and displayed in the log window. This report lists the I/O assignments necessary before Layout can proceed.

When Designer is started, the I/O Bank Assigner tool is run automatically if the Layout command is executed. The I/O Bank Assigner takes care of the necessary I/O assignments. However, these assignments can also be made manually with MVN or by importing the PDC file. Refer to the "Assigning Technologies and VREF to I/O Banks" section on page 198 for further description.

The I/O bank report can also be extracted from Designer by choosing **Tools** > **Report** and setting the Report Type to **IOBank**.

This report has the following tables: I/O Function, I/O Technology, I/O Bank Resource Usage, and I/O Voltage Usage. This report is useful if the user wants to do I/O assignments manually.

## I/O Function

Figure 8-8 shows an example of the I/O Function table included in the I/O bank report:

```
I/O Function:

    Type                            | w/o register  | w/ register  | w/ DDR register
    --------------------------------|---------------|--------------|----------------
    Input I/O                       | 7             | 0            | 1
    Output I/O                      | 1             | 1            | 0
    Bidirectional I/O               | 0             | 0            | 0
    Differential Input I/O Pairs    | 0             | 0            | 0
    Differential Output I/O Pairs   | 0             | 0            | 1
```

***Figure 8-8* • I/O Function Table**

This table lists the number of input I/Os, output I/Os, bidirectional I/Os, and differential input and output I/O pairs that use I/O and DDR registers.

Note: IGLOO nano and ProASIC3 nano devices do not support differential inputs.

Certain rules must be met to implement registered and DDR I/O functions (refer to the I/O Structures section of the handbook for the device you are using and the "DDR" section on page 190).

## I/O Technology

The I/O Technology table (shown in Figure 8-9) gives the values of VCCI and VREF (reference voltage) for all the I/O standards used in the design. The user should assign these voltages appropriately.

```
I/O Technology:

                                    |   Voltages    |              I/Os
    --------------------------------|-------|-------|-------|--------|--------------
    I/O Standard(s)                 | Vcci  | Vref  | Input | Output | Bidirectional
    --------------------------------|-------|-------|-------|--------|--------------
    LVTTL                           | 3.30v | N/A   | 1     | 1      | 0
    LVCMOS33                        | 3.30v | N/A   | 1     | 0      | 0
    LVCMOS25_50                     | 2.50v | N/A   | 1     | 1      | 0
    LVCMOS18                        | 1.80v | N/A   | 1     | 0      | 0
    LVCMOS15                        | 1.50v | N/A   | 1     | 0      | 0
    PCIX                            | 3.30v | N/A   | 1     | 0      | 0
    LVDS                            | 2.50v | N/A   | 0     | 2      | 0
    SSTL3I (Input/Bidirectional)    | 3.30v | 1.50v | 1     | 0      | 0
    GTLP33 (Input/Bidirectional)    | 3.30v | 1.00v | 1     | 0      | 0
```

***Figure 8-9* • I/O Technology Table**

## I/O Bank Resource Usage

This is an important portion of the report. The user must meet the requirements stated in this table. Figure 8-10 shows the I/O Bank Resource Usage table included in the I/O bank report:

```
I/O Bank Resource Usage:

          |   Voltages    | Single I/Os  | Diff I/O Pairs |        Vref I/Os
          |-------|-------|------|-------|-------|--------|------|-------|----------
          | Vcci  | Vref  | Used | Total | Used  | Total  | Used | Total | Vref Pins
    ------|-------|-------|------|-------|-------|--------|------|-------|----------
    Bank0 | N/A   | N/A   | 0    | 25    | 0     | 12     | N/A  | N/A   | N/A
    Bank1 | N/A   | N/A   | 0    | 15    | 0     | 7      | N/A  | N/A   | N/A
    Bank2 | N/A   | N/A   | 0    | 17    | 0     | 6      | N/A  | N/A   | N/A
    Bank3 | N/A   | N/A   | 0    | 16    | 0     | 7      | N/A  | N/A   | N/A
    Bank4 | N/A   | N/A   | 0    | 15    | 0     | 7      | N/A  | N/A   | N/A
    Bank5 | N/A   | N/A   | 0    | 22    | 0     | 10     | N/A  | N/A   | N/A
    Bank6 | N/A   | N/A   | 0    | 19    | 0     | 9      | N/A  | N/A   | N/A
    Bank7 | N/A   | N/A   | 0    | 18    | 0     | 7      | N/A  | N/A   | N/A

Warning: IOPRL1: 8 I/O Bank(s) have not been assigned any voltages.
         The I/O modules located in these banks cannot be assigned any I/O macro.
```

***Figure 8-10* • I/O Bank Resource Usage Table**

The example in Figure 8-10 shows that none of the I/O macros is assigned to the bank because more than one VCCI is detected.

## I/O Voltage Usage

The I/O Voltage Usage table provides the number of VREF (E devices only) and $V_{CCI}$ assignments required in the design. If the user decides to make I/O assignments manually (PDC or MVN), the issues listed in this table must be resolved before proceeding to Layout. As stated earlier, VREF assignments must be made if there are any voltage-referenced I/Os.

Figure 8-11 shows the I/O Voltage Usage table included in the I/O bank report.

```
I/O Voltage Usage:

       Voltages     |      I/Os
    -------|-------|------|-------
     Vcci  | Vref  | Used | Total
    -------|-------|------|-------
     1.50v | N/A   | 1*   | 0
     1.80v | N/A   | 1*   | 0
     2.50v | N/A   | 4*   | 0
     3.30v | N/A   | 6*   | 0
     3.30v | 1.00v | 1*   | 0
     3.30v | 1.50v | 1*   | 0

Warning: IOPRL3: This design has infeasible I/O voltage requirement(s),
         which are indicated with a '*' in the I/O Voltage Usage table.
         Please consider importing a Physical Design Constraint (PDC) file or
         use the MultiView Navigator (MVN) to resolve the design's voltage requirements
         before running Layout.
```

***Figure 8-11* • I/O Voltage Usage Table**

The table in Figure 8-11 indicates that there are two voltage-referenced I/Os used in the design. Even though both of the voltage-referenced I/O technologies have the same VCCI voltage, their VREF voltages are different. As a result, two I/O banks are needed to assign the VCCI and VREF voltages.

In addition, there are six single-ended I/Os used that have the **same VCCI voltage. Since two banks are already assigned with the same VCCI voltage and there are enough u**nused bonded I/Os in

those banks, the user does not need to assign the same VCCI voltage to another bank. The user needs to assign the other three VCCI voltages to three more banks.

# Assigning Technologies and VREF to I/O Banks

Low power flash devices offer a wide variety of I/O standards, including voltage-referenced standards. Before proceeding to Layout, each bank must have the required VCCI voltage assigned for the corresponding I/O technologies used for that bank. The voltage-referenced standards require the use of a reference voltage (VREF). This assignment can be done manually or automatically. The following sections describe this in detail.

## Manually Assigning Technologies to I/O Banks

The user can import the PDC at this point and resolve this requirement. The PDC command is

```
set_iobank [bank name] –vcci [vcci value]
```

Another method is to use the I/O Bank Settings dialog box (**MVN** > **Edit** > **I/O Bank Settings**) to set up the $V_{CCI}$ voltage for the bank (Figure 8-12).

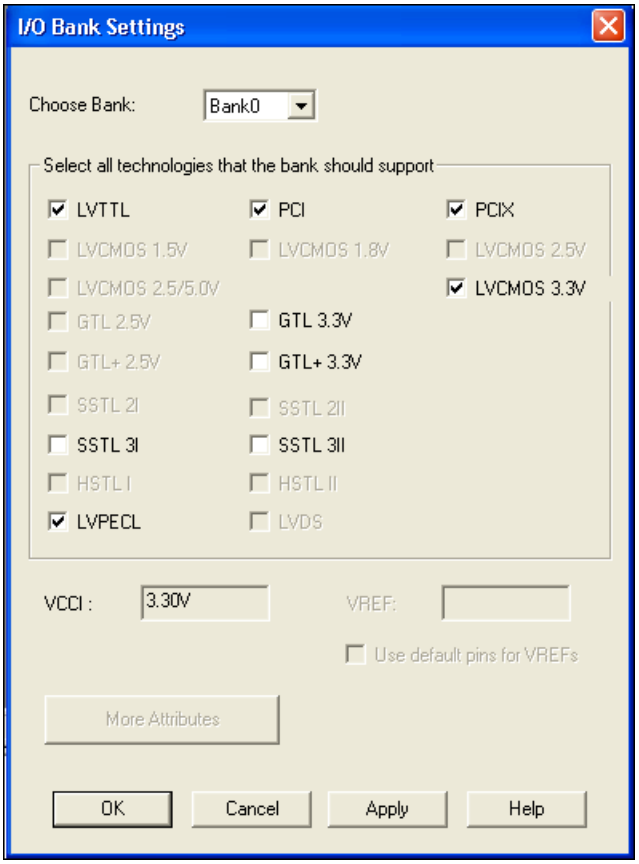


***Figure 8-12*** **• Setting VCCI for a Bank**

The procedure is as follows:

1. Select the bank to which you want VCCI to be assigned from the **Choose Bank** list.
2. Select the I/O standards for that bank. If you select any standard, the tool will automatically show all compatible standards that have a common VCCI voltage requirement.
3. Click **Apply**.
4. Repeat steps 1–3 to assign VCCI voltages to other banks. Refer to Figure 8-11 on page 197 to find out how many I/O banks are needed for VCCI bank assignment.

## Manually Assigning VREF Pins

Voltage-referenced inputs require an input reference voltage (VREF). The user must assign VREF pins before running Layout. Before assigning a VREF pin, the user must set a VREF technology for the bank to which the pin belongs.

## VREF Rules for the Implementation of Voltage-Referenced I/O Standards

The VREF rules are as follows:

1. Any I/O (except JTAG I/Os) can be used as a $V_{REF}$ pin.
2. One $V_{REF}$ pin can support up to 15 I/Os. It is recommended, but not required, that eight of them be on one side and seven on the other side (in other words, all 15 can still be on one side of VREF).
3. SSTL3 (I) and (II): Up to 40 I/Os per north or south bank in any position
4. LVPECL / GTL+ 3.3 V / GTL 3.3 V: Up to 48 I/Os per north or south bank in any position (not applicable for IGLOO nano and ProASIC3 nano devices)
5. SSTL2 (I) and (II) / GTL+ 2.5 V / GTL 2.5 V: Up to 72 I/Os per north or south bank in any position
6. VREF minibanks partition rule: Each I/O bank is physically partitioned into VREF minibanks. The VREF pins within a VREF minibank are interconnected internally, and consequently, only one VREF voltage can be used within each VREF minibank. If a bank does not require a VREF signal, the VREF pins of that bank are available as user I/Os.
7. The first VREF minibank includes all I/Os starting from one end of the bank to the first power triple and eight more I/Os after the power triple. Therefore, the first VREF minibank may contain (0 + 8), (2 + 8), (4 + 8), (6 + 8), or (8 + 8) I/Os.

   The second VREF minibank is adjacent to the first VREF minibank and contains eight I/Os, a power triple, and eight more I/Os after the triple. An analogous rule applies to all other VREF minibanks but the last.

   The last VREF minibank is adjacent to the previous one but contains eight I/Os, a power triple, and all I/Os left at the end of the bank. This bank may also contain (8 + 0), (8 + 2), (8 + 4), (8 + 6), or (8 + 8) available I/Os.

   **Example**:

   4 I/Os → Triple → 8 I/Os, 8 I/Os → Triple → 8 I/Os, 8 I/Os → Triple → 2 I/Os

   That is, minibank A = (4 + 8) I/Os, minibank B = (8 + 8) I/Os, minibank C = (8 + 2) I/Os.
8. Only minibanks that contain input or bidirectional I/Os require a VREF. A VREF is not needed for minibanks composed of output or tristated I/Os.

## Assigning the VREF Voltage to a Bank

When importing the PDC file, the VREF voltage can be assigned to the I/O bank. The PDC command is as follows:

```
set_iobank –vref [value]
```

Another method for assigning VREF is by using **MVN** > **Edit** > **I/O Bank Settings** (Figure 8-13 on page 200).

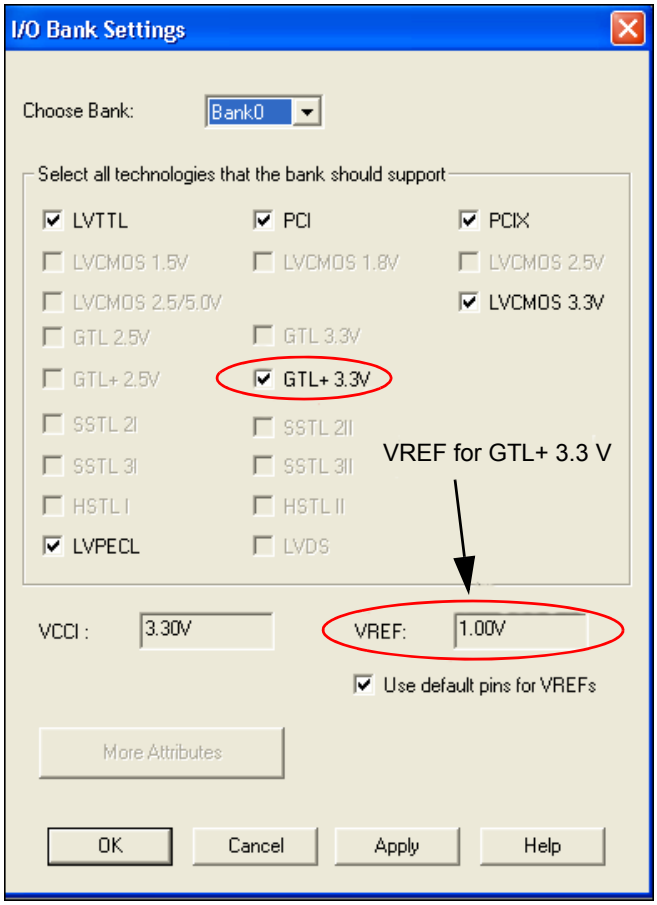


***Figure 8-13*** **• Selecting VREF Voltage for the I/O Bank**

## Assigning VREF Pins for a Bank

The user can use default pins for VREF. In this case, select the **Use default pins for VREFs** check box (Figure 8-13). This option guarantees full VREF coverage of the bank. The equivalent PDC command is as follows:

```
set_vref_default [bank name]
```

To be able to choose VREF pins, adequate VREF pins must be created to allow legal placement of the compatible voltage-referenced I/Os.

To assign VREF pins manually, the PDC command is as follows:

```
set_vref –bank [bank name] [package pin numbers]
```

For ChipPlanner/PinEditor to show the range of a VREF pin, perform the following steps:

1. Assign VCCI to a bank using **MVN** > **Edit** > **I/O Bank Settings**.
2. Open **ChipPlanner**. Zoom in on an I/O package pin in that bank.
3. Highlight the pin and then right-click. Choose **Use Pin for VREF**.

4. Right-click and then choose **Highlight VREF range**. All the pins covered by that VREF pin will be highlighted (Figure 8-14).

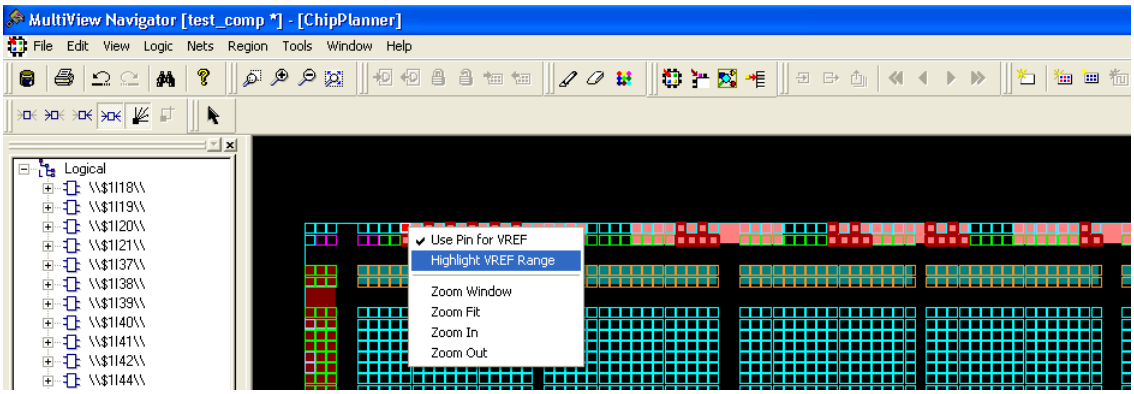


***Figure 8-14* • VREF Range**

Using PinEditor or ChipPlanner, VREF pins can also be assigned (Figure 8-15).

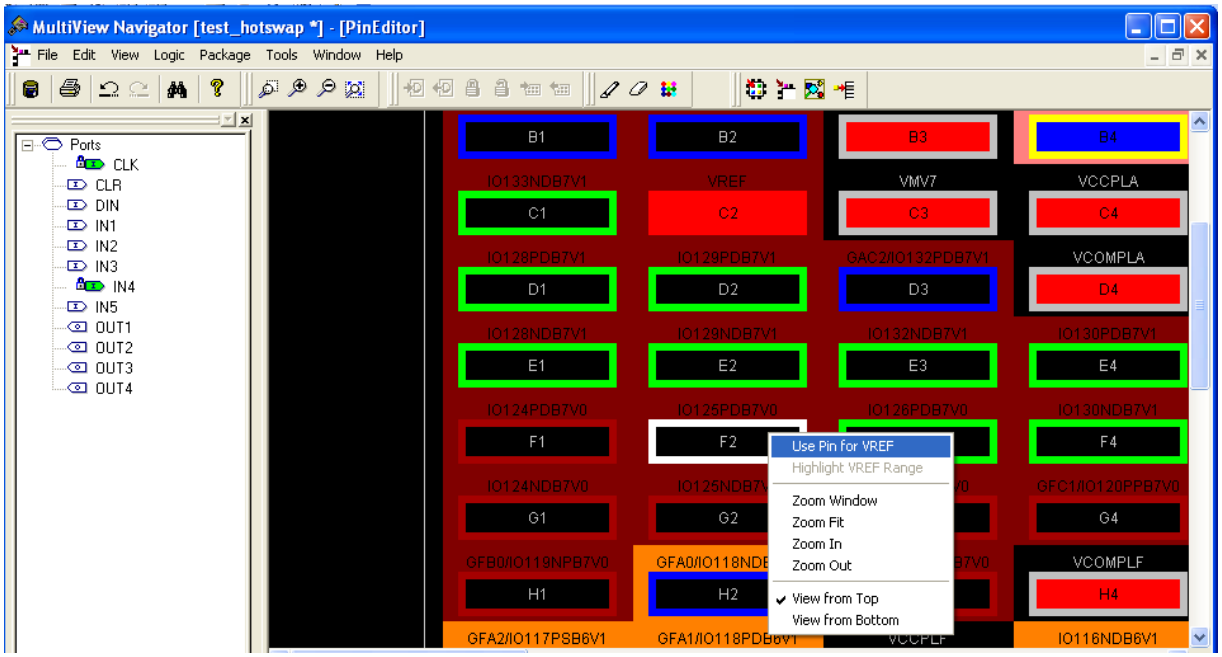


***Figure 8-15* • Assigning VREF from PinEditor**

To unassign a VREF pin:

1. Select the pin to unassign.
2. Right-click and choose **Use Pin for VREF.** The check mark next to the command disappears. The VREF pin is now a regular pin.

Resetting the pin may result in unassigning I/O cores, even if they are locked. In this case, a warning message appears so you can cancel the operation.

After you assign the VREF pins, right-click a VREF pin and choose **Highlight VREF Range** to see how many I/Os are covered by that pin. To unhighlight the range, choose **Unhighlight All** from the **Edit** menu.

## Automatically Assigning Technologies to I/O Banks

The I/O Bank Assigner (IOBA) tool runs automatically when you run Layout. You can also use this tool from within the MultiView Navigator (Figure 8-17). The IOBA tool automatically assigns technologies and VREF pins (if required) to every I/O bank that does not currently have any technologies assigned to it. This tool is available when at least one I/O bank is unassigned.

To automatically assign technologies to I/O banks, choose I/O Bank Assigner from the **Tools** menu (or click the I/O Bank Assigner's toolbar button, shown in Figure 8-16).

***Figure 8-16*** **• I/O Bank Assigner's Toolbar Button**

Messages will appear in the Output window informing you when the automatic I/O bank assignment begins and ends. If the assignment is successful, the message "I/O Bank Assigner completed successfully" appears in the Output window, as shown in Figure 8-17.

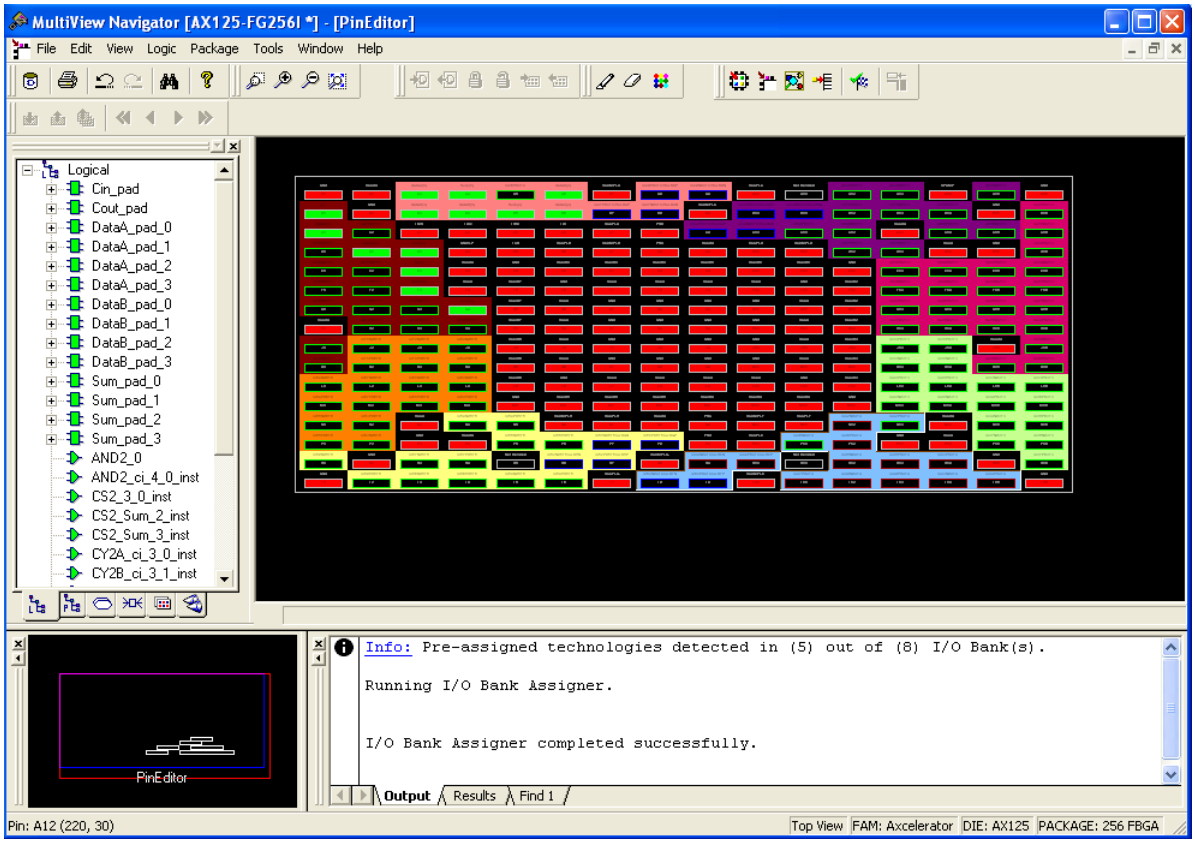


***Figure 8-17*** **• I/O Bank Assigner Displays Messages in Output Window**

If the assignment is not successful, an error message appears in the Output window.

To undo the I/O bank assignments, choose **Undo** from the **Edit** menu. Undo removes the I/O technologies assigned by the IOBA. It does not remove the I/O technologies previously assigned.

To redo the changes undone by the Undo command, choose **Redo** from the **Edit** menu.

To clear I/O bank assignments made before using the Undo command, manually unassign or reassign I/O technologies to banks. To do so, choose **I/O Bank Settings** from the **Edit** menu to display the I/O Bank Settings dialog box.

# Conclusion

Fusion, IGLOO, and ProASIC3 support for multiple I/O standards minimizes board-level components and makes possible a wide variety of applications. The Microsemi Designer software, integrated with Libero SoC, presents a clear visual display of I/O assignments, allowing users to verify I/O and board-level design requirements before programming the device. The device I/O features and functionalities ensure board designers can produce low-cost and low power FPGA applications fulfilling the complexities of contemporary design needs.

# Related Documents

## User's Guides

*Libero SoC User's Guide*

http://www.microsemi.com/soc/documents/libero_ug.pdf

*IGLOO, ProASIC3, SmartFusion, and Fusion Macro Library Guide*

http://www.microsemi.com/soc/documents/pa3_libguide_ug.pdf

*SmartGen Core Reference Guide*

http://www.microsemi.com/soc/documents/genguide_ug.pdf

# List of Changes

The following table lists critical changes that were made in each revision of the document.

| Date | Changes | Page |
|---|---|---|
| August 2012 | The notes in Table 8-2 • Designer State (resulting from I/O attribute modification) were revised to clarify which device families support programmable input delay (SAR 39666). | 187 |
| June 2011 | Figure 8-2 • SmartGen Catalog was updated (SAR 24310). Figure 8-3 • Expanded I/O Section and the step associated with it were deleted to reflect changes in the software. | 188 |
| | The following rule was added to the "VREF Rules for the Implementation of Voltage-Referenced I/O Standards" section:<br>Only minibanks that contain input or bidirectional I/Os require a VREF. A VREF is not needed for minibanks composed of output or tristated I/Os (SAR 24310). | 199 |
| July 2010 | Notes were added where appropriate to point out that IGLOO nano and ProASIC3 nano devices do not support differential inputs (SAR 21449). | N/A |
| v1.4<br>(December 2008) | IGLOO nano and ProASIC3 nano devices were added to Table 8-1 • Flash-Based FPGAs. | 186 |
| | The notes for Table 8-2 • Designer State (resulting from I/O attribute modification) were revised to indicate that skew control and input delay do not apply to nano devices. | 187 |
| v1.3<br>(October 2008) | The "Flash FPGAs I/O Support" section was revised to include new families and make the information more concise. | 186 |
| v1.2<br>(June 2008) | The following changes were made to the family descriptions in Table 8-1 • Flash-Based FPGAs:<br>• ProASIC3L was updated to include 1.5 V.<br>• The number of PLLs for ProASIC3E was changed from five to six. | 186 |
| v1.1<br>(March 2008) | This document was previously part of the *I/O Structures in IGLOO and ProASIC3 Devices* document. The content was separated and made into a new document. | N/A |
| | Table 8-2 • Designer State (resulting from I/O attribute modification) was updated to include note 2 for IGLOO PLUS. | 187 |

# 9 – DDR for Microsemi's Low Power Flash Devices

## Introduction

The I/Os in Fusion, IGLOO, and ProASIC3 devices support Double Data Rate (DDR) mode. In this mode, new data is present on every transition (or clock edge) of the clock signal. This mode doubles the data transfer rate compared with Single Data Rate (SDR) mode, where new data is present on one transition (or clock edge) of the clock signal. Low power flash devices have DDR circuitry built into the I/O tiles. I/Os are configured to be DDR receivers or transmitters by instantiating the appropriate special macros (examples shown in Figure 9-4 on page 210 and Figure 9-5 on page 211) and buffers (DDR_OUT or DDR_REG) in the RTL design. This document discusses the options the user can choose to configure the I/Os in this mode and how to instantiate them in the design.

## Double Data Rate (DDR) Architecture

Low power flash devices support 350 MHz DDR inputs and outputs. In DDR mode, new data is present on every transition of the clock signal. Clock and data lines have identical bandwidths and signal integrity requirements, making them very efficient for implementing very high-speed systems. High-speed DDR interfaces can be implemented using LVDS (not applicable for IGLOO nano and ProASIC3 nano devices). In IGLOOe, ProASIC3E, AFS600, and AFS1500 devices, DDR interfaces can also be implemented using the HSTL, SSTL, and LVPECL I/O standards. The DDR feature is primarily implemented in the FPGA core periphery and is not tied to a specific I/O technology or limited to any I/O standard.

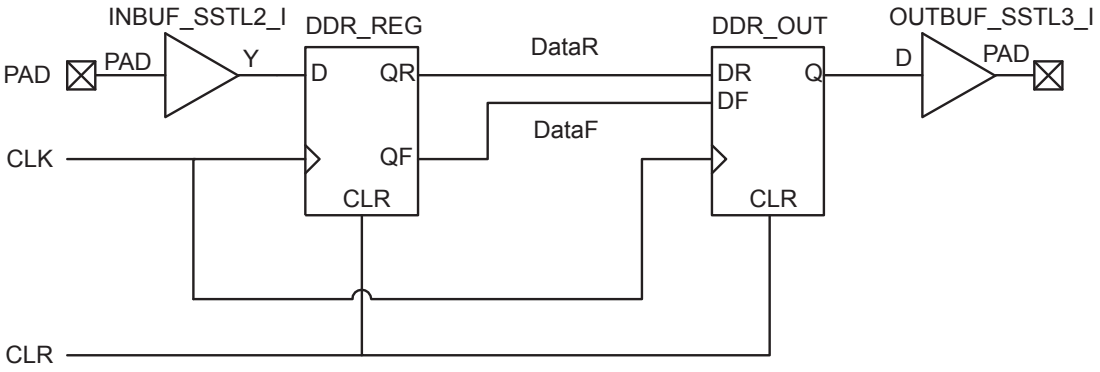


***Figure 9-1*** **• DDR Support in Low Power Flash Devices**

# DDR Support in Flash-Based Devices

The flash FPGAs listed in Table 9-1 support the DDR feature and the functions described in this document.

***Table 9-1* • Flash-Based FPGAs**

| Series | Family* | Description |
|---|---|---|
| IGLOO | IGLOO | Ultra-low power 1.2 V to 1.5 V FPGAs with Flash*Freeze technology |
| | IGLOOe | Higher density IGLOO FPGAs with six PLLs and additional I/O standards |
| | IGLOO nano | The industry's lowest-power, smallest-size solution |
| ProASIC3 | ProASIC3 | Low power, high-performance 1.5 V FPGAs |
| | ProASIC3E | Higher density ProASIC3 FPGAs with six PLLs and additional I/O standards |
| | ProASIC3 nano | Lowest-cost solution with enhanced I/O capabilities |
| | ProASIC3L | ProASIC3 FPGAs supporting 1.2 V to 1.5 V with Flash*Freeze technology |
| | RT ProASIC3 | Radiation-tolerant RT3PE600L and RT3PE3000L |
| | Military ProASIC3/EL | Military temperature A3PE600L, A3P1000, and A3PE3000L |
| | Automotive ProASIC3 | ProASIC3 FPGAs qualified for automotive applications |
| Fusion | Fusion | Mixed signal FPGA integrating ProASIC3 FPGA fabric, programmable analog block, support for ARM® Cortex™-M1 soft processors, and flash memory into a monolithic device |

*Note: *The device names link to the appropriate datasheet, including product brief, DC and switching characteristics, and packaging information.*

## *IGLOO Terminology*

In documentation, the terms IGLOO series and IGLOO devices refer to all of the IGLOO devices as listed in Table 9-1. Where the information applies to only one product line or limited devices, these exclusions will be explicitly stated.

## *ProASIC3 Terminology*

In documentation, the terms ProASIC3 series and ProASIC3 devices refer to all of the ProASIC3 devices as listed in Table 9-1. Where the information applies to only one product line or limited devices, these exclusions will be explicitly stated.

To further understand the differences between the IGLOO and ProASIC3 devices, refer to the *Industry's Lowest Power FPGAs Portfolio*.

# I/O Cell Architecture

Low power flash devices support DDR in the I/O cells in four different modes: Input, Output, Tristate, and Bidirectional pins. For each mode, different I/O standards are supported, with most I/O standards having special sub-options. For the ProASIC3 nano and IGLOO nano devices, DDR is supported only in the 60 k, 125 k, and 250 k logic densities. Refer to Table 9-2 for a sample of the available I/O options. Additional I/O options can be found in the relevant family datasheet.

***Table 9-2* • DDR I/O Options**

| DDR Register Type | I/O Type | I/O Standard | Sub-Options | Comments |
|---|---|---|---|---|
| Receive Register | Input | Normal | None | 3.3 V TTL (default) |
| | | LVCMOS | Voltage | 1.5 V, 1.8 V, 2.5 V, 5 V (1.5 V default) |
| | | | Pull-Up | None (default) |
| | | PCI/PCI-X | None | |
| | | GTL/GTL+ | Voltage | 2.5 V, 3.3 V (3.3 V default) |
| | | HSTL | Class | I / II (I default) |
| | | SSTL2/SSTL3 | Class | I / II (I default) |
| | | LVPECL | None | |
| | | LVDS | None | |
| Transmit Register | Output | Normal | None | 3.3 V TTL (default) |
| | | LVTTL | Output Drive | 2, 4, 6, 8, 12, 16, 24, 36 mA (8 mA default) |
| | | | Slew Rate | Low/high (high default) |
| | | LVCMOS | Voltage | 1.5 V, 1.8 V, 2.5 V, 5 V (1.5 V default) |
| | | PCI/PCI-X | None | |
| | | GTL/GTL+ | Voltage | 1.8 V, 2.5 V, 3.3 V (3.3 V default) |
| | | HSTL | Class | I / II (I default) |
| | | SSTL2/SSTL3 | Class | I / II (I default) |
| | | LVPECL* | None | |
| | | LVDS* | None | |

*Note: *IGLOO nano and ProASIC3 nano devices do not support differential inputs.*

***Table 9-2* • DDR I/O Options (continued)**

| DDR Register Type | I/O Type | I/O Standard | Sub-Options | Comments |
|---|---|---|---|---|
| Transmit Register (continued) | Tristate Buffer | Normal | Enable Polarity | Low/high (low default) |
| | | LVTTL | Output Drive | 2, 4, 6, 8, 12,16, 24, 36 mA (8 mA default) |
| | | | Slew Rate | Low/high (high default) |
| | | | Enable Polarity | Low/high (low default) |
| | | | Pull-Up/-Down | None (default) |
| | | LVCMOS | Voltage | 1.5 V, 1.8 V, 2.5 V, 5 V (1.5 V default) |
| | | | Output Drive | 2, 4, 6, 8, 12, 16, 24, 36 mA (8 mA default) |
| | | | Slew Rate | Low/high (high default) |
| | | | Enable Polarity | Low/high (low default) |
| | | | Pull-Up/-Down | None (default) |
| | | PCI/PCI-X | Enable Polarity | Low/high (low default) |
| | | GTL/GTL+ | Voltage | 1.8 V, 2.5 V, 3.3 V (3.3 V default) |
| | | | Enable Polarity | Low/high (low default) |
| | | HSTL | Class | I / II (I default) |
| | | | Enable Polarity | Low/high (low default) |
| | | SSTL2/SSTL3 | Class | I / II (I default) |
| | | | Enable Polarity | Low/high (low default) |
| | Bidirectional Buffer | Normal | Enable Polarity | Low/high (low default) |
| | | LVTTL | Output Drive | 2, 4, 6, 8, 12, 16, 24, 36 mA (8 mA default) |
| | | | Slew Rate | Low/high (high default) |
| | | | Enable Polarity | Low/high (low default) |
| | | | Pull-Up/-Down | None (default) |
| | | LVCMOS | Voltage | 1.5 V, 1.8 V, 2.5 V, 5 V (1.5 V default) |
| | | | Enable Polarity | Low/high (low default) |
| | | | Pull-Up | None (default) |
| | | PCI/PCI-X | None | |
| | | | Enable Polarity | Low/high (low default) |
| | | GTL/GTL+ | Voltage | 1.8 V, 2.5 V, 3.3 V (3.3 V default) |
| | | | Enable Polarity | Low/high (low default) |
| | | HSTL | Class | I / II (I default) |
| | | | Enable Polarity | Low/high (low default) |
| | | SSTL2/SSTL3 | Class | I / II (I default) |
| | | | Enable Polarity | Low/high (low default) |

*Note: *IGLOO nano and ProASIC3 nano devices do not support differential inputs.*

# Input Support for DDR

The basic structure to support a DDR input is shown in Figure 9-2. Three input registers are used to capture incoming data, which is presented to the core on each rising edge of the I/O register clock. Each I/O tile supports DDR inputs.

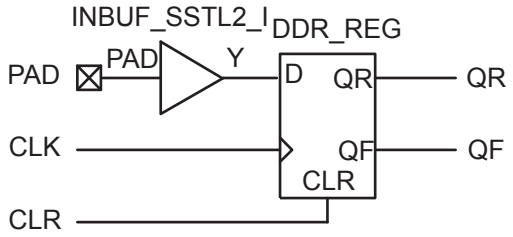


***Figure 9-2*** **• DDR Input Register Support in Low Power Flash Devices**

# Output Support for DDR

The basic DDR output structure is shown in Figure 9-1 on page 205. New data is presented to the output every half clock cycle.

Note: DDR macros and I/O registers do not require additional routing. The combiner automatically recognizes the DDR macro and pushes its registers to the I/O register area at the edge of the chip. The routing delay from the I/O registers to the I/O buffers is already taken into account in the DDR macro.

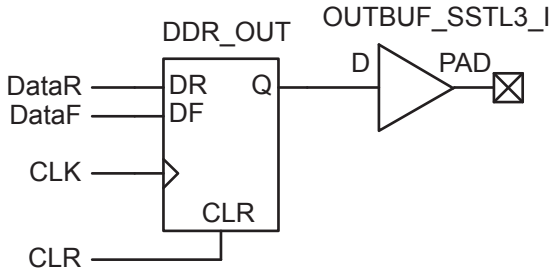


***Figure 9-3*** **• DDR Output Register (SSTL3 Class I)**

# Instantiating DDR Registers

Using SmartGen is the simplest way to generate the appropriate RTL files for use in the design. Figure 9-4 shows an example of using SmartGen to generate a DDR SSTL2 Class I input register. SmartGen provides the capability to generate all of the DDR I/O cells as described. The user, through the graphical user interface, can select from among the many supported I/O standards. The output formats supported are Verilog, VHDL, and EDIF.

Figure 9-5 on page 211 through Figure 9-8 on page 214 show the I/O cell configured for DDR using SSTL2 Class I technology. For each I/O standard, the I/O pad is buffered by a special primitive that indicates the I/O standard type.

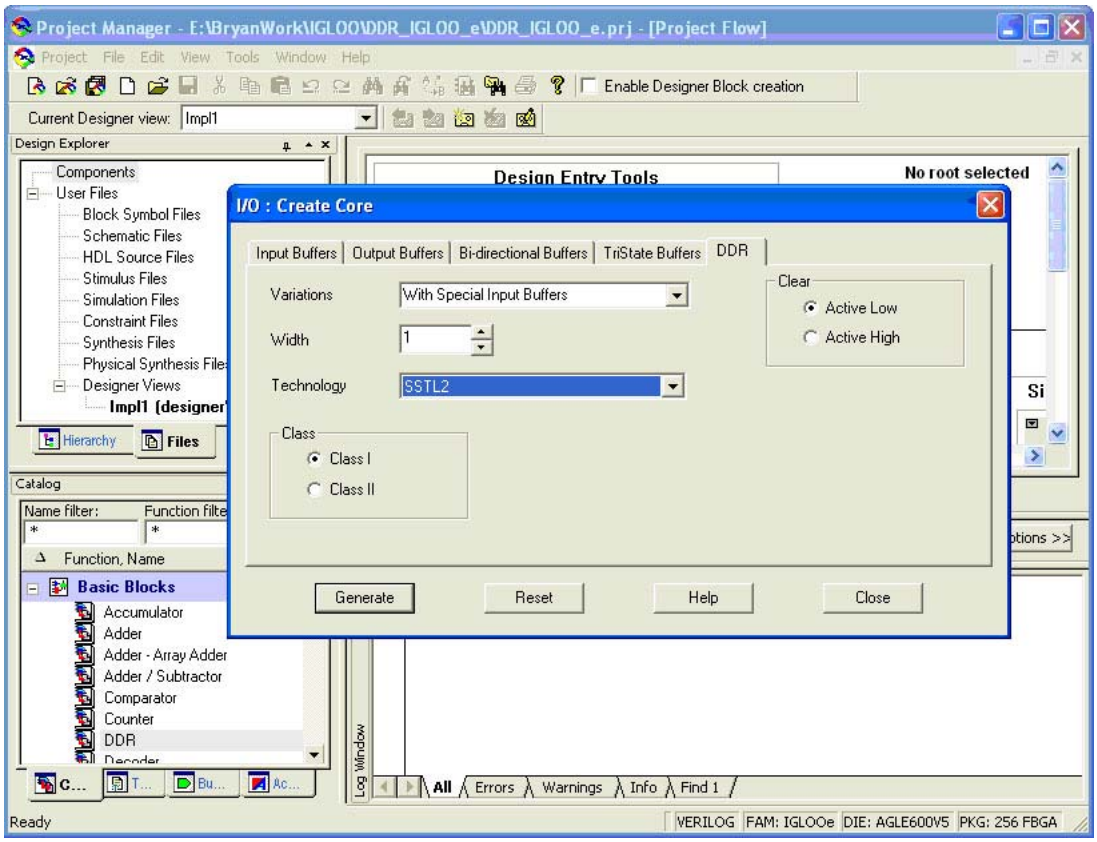


***Figure 9-4* • Example of Using SmartGen to Generate a DDR SSTL2 Class I Input Register**

## DDR Input Register

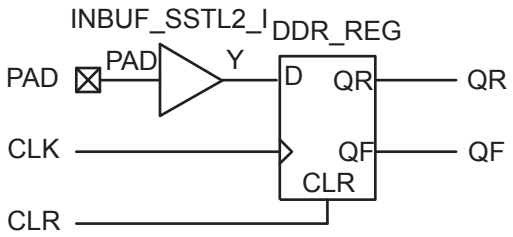


***Figure 9-5*** **• DDR Input Register (SSTL2 Class I)**

The corresponding structural representations, as generated by SmartGen, are shown below:

### *Verilog*

```
module DDR_InBuf_SSTL2_I(PAD,CLR,CLK,QR,QF);

input   PAD, CLR, CLK;
output  QR, QF;

wire Y;

  INBUF_SSTL2_I INBUF_SSTL2_I_0_inst(.PAD(PAD),.Y(Y));
  DDR_REG DDR_REG_0_inst(.D(Y),.CLK(CLK),.CLR(CLR),.QR(QR),.QF(QF));

endmodule
```

### *VHDL*

```
library ieee;
use ieee.std_logic_1164.all;
--The correct library will be inserted automatically by SmartGen
library proasic3; use proasic3.all;
--library fusion; use fusion.all;
--library igloo; use igloo.all;

entity DDR_InBuf_SSTL2_I is
  port(PAD, CLR, CLK : in std_logic;  QR, QF : out std_logic) ;
end DDR_InBuf_SSTL2_I;

architecture DEF_ARCH of  DDR_InBuf_SSTL2_I is

  component INBUF_SSTL2_I
    port(PAD : in std_logic := 'U'; Y : out std_logic) ;
  end component;

  component DDR_REG
    port(D, CLK, CLR : in std_logic := 'U'; QR, QF : out std_logic) ;
  end component;

signal Y : std_logic ;

begin

  INBUF_SSTL2_I_0_inst : INBUF_SSTL2_I
  port map(PAD => PAD, Y => Y);
  DDR_REG_0_inst : DDR_REG
  port map(D => Y, CLK => CLK, CLR => CLR, QR => QR, QF => QF);

end DEF_ARCH;
```

## DDR Output Register

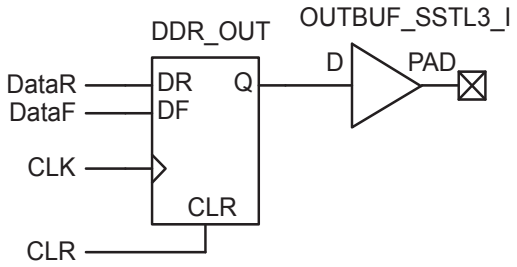


***Figure 9-6*** **• DDR Output Register (SSTL3 Class I)**

### *Verilog*

```
module DDR_OutBuf_SSTL3_I(DataR,DataF,CLR,CLK,PAD);

input   DataR, DataF, CLR, CLK;
output  PAD;

wire Q, VCC;

  VCC VCC_1_net(.Y(VCC));
  DDR_OUT DDR_OUT_0_inst(.DR(DataR),.DF(DataF),.CLK(CLK),.CLR(CLR),.Q(Q));
  OUTBUF_SSTL3_I OUTBUF_SSTL3_I_0_inst(.D(Q),.PAD(PAD));

endmodule
```

### *VHDL*

```
library ieee;
use ieee.std_logic_1164.all;
library proasic3; use proasic3.all;

entity DDR_OutBuf_SSTL3_I is
  port(DataR, DataF, CLR, CLK : in std_logic;  PAD : out std_logic) ;
end DDR_OutBuf_SSTL3_I;

architecture DEF_ARCH of  DDR_OutBuf_SSTL3_I is

  component DDR_OUT
    port(DR, DF, CLK, CLR : in std_logic := 'U'; Q : out std_logic) ;
  end component;

  component OUTBUF_SSTL3_I
    port(D : in std_logic := 'U'; PAD : out std_logic) ;
  end component;

  component VCC
    port( Y : out std_logic);
  end component;

signal Q, VCC_1_net : std_logic ;

begin

  VCC_2_net : VCC port map(Y => VCC_1_net);
  DDR_OUT_0_inst : DDR_OUT
  port map(DR => DataR, DF => DataF, CLK => CLK, CLR => CLR, Q => Q);
  OUTBUF_SSTL3_I_0_inst : OUTBUF_SSTL3_I
  port map(D => Q, PAD => PAD);

end DEF_ARCH;
```

## DDR Tristate Output Register

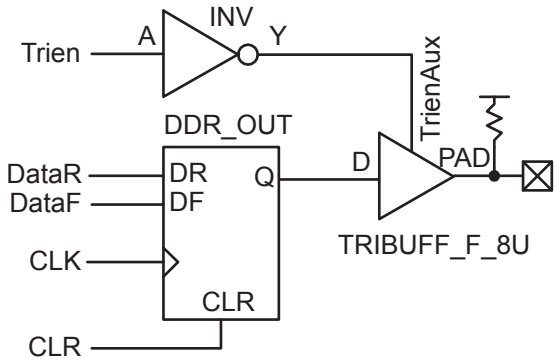


***Figure 9-7 •*** **DDR Tristate Output Register, LOW Enable, 8 mA, Pull-Up (LVTTL)**

### *Verilog*

```
module DDR_TriStateBuf_LVTTL_8mA_HighSlew_LowEnb_PullUp(DataR, DataF, CLR, CLK, Trien,
  PAD);

input   DataR, DataF, CLR, CLK, Trien;
output  PAD;

wire TrienAux, Q;

  INV Inv_Tri(.A(Trien),.Y(TrienAux));
  DDR_OUT DDR_OUT_0_inst(.DR(DataR),.DF(DataF),.CLK(CLK),.CLR(CLR),.Q(Q));
  TRIBUFF_F_8U TRIBUFF_F_8U_0_inst(.D(Q),.E(TrienAux),.PAD(PAD));

endmodule
```

### *VHDL*

```
library ieee;
use ieee.std_logic_1164.all;
library proasic3; use proasic3.all;

entity DDR_TriStateBuf_LVTTL_8mA_HighSlew_LowEnb_PullUp is
  port(DataR, DataF, CLR, CLK, Trien : in std_logic;  PAD : out std_logic) ;
end DDR_TriStateBuf_LVTTL_8mA_HighSlew_LowEnb_PullUp;

architecture DEF_ARCH of DDR_TriStateBuf_LVTTL_8mA_HighSlew_LowEnb_PullUp is

  component INV
    port(A : in std_logic := 'U'; Y : out std_logic) ;
  end component;

  component DDR_OUT
    port(DR, DF, CLK, CLR : in std_logic := 'U'; Q : out std_logic) ;
  end component;

  component TRIBUFF_F_8U
    port(D, E : in std_logic := 'U'; PAD : out std_logic) ;
  end component;

signal TrienAux, Q : std_logic ;

begin

  Inv_Tri : INV
  port map(A => Trien, Y => TrienAux);
```

```
  DDR_OUT_0_inst : DDR_OUT
  port map(DR => DataR, DF => DataF, CLK => CLK, CLR => CLR, Q => Q);
  TRIBUFF_F_8U_0_inst : TRIBUFF_F_8U
  port map(D => Q, E => TrienAux, PAD => PAD);

end DEF_ARCH;
```

## DDR Bidirectional Buffer

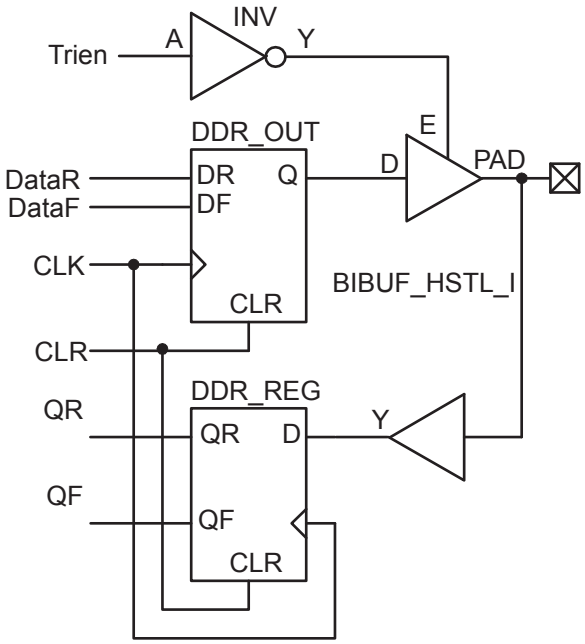


***Figure 9-8*** **• DDR Bidirectional Buffer, LOW Output Enable (HSTL Class II)**

### *Verilog*

```
module DDR_BiDir_HSTL_I_LowEnb(DataR,DataF,CLR,CLK,Trien,QR,QF,PAD);

input   DataR, DataF, CLR, CLK, Trien;
output  QR, QF;
inout   PAD;

wire TrienAux, D, Q;

  INV Inv_Tri(.A(Trien), .Y(TrienAux));
  DDR_OUT DDR_OUT_0_inst(.DR(DataR),.DF(DataF),.CLK(CLK),.CLR(CLR),.Q(Q));
  DDR_REG DDR_REG_0_inst(.D(D),.CLK(CLK),.CLR(CLR),.QR(QR),.QF(QF));
  BIBUF_HSTL_I BIBUF_HSTL_I_0_inst(.PAD(PAD),.D(Q),.E(TrienAux),.Y(D));

endmodule
```

### VHDL

```
library ieee;
use ieee.std_logic_1164.all;
library proasic3; use proasic3.all;

entity DDR_BiDir_HSTL_I_LowEnb is
  port(DataR, DataF, CLR, CLK, Trien : in std_logic; QR, QF : out std_logic;
    PAD : inout std_logic) ;
end DDR_BiDir_HSTL_I_LowEnb;

architecture DEF_ARCH of  DDR_BiDir_HSTL_I_LowEnb is

  component INV
    port(A : in std_logic := 'U'; Y : out std_logic) ;
  end component;

  component DDR_OUT
    port(DR, DF, CLK, CLR : in std_logic := 'U'; Q : out std_logic) ;
  end component;

  component DDR_REG
    port(D, CLK, CLR : in std_logic := 'U'; QR, QF : out std_logic) ;
  end component;

  component BIBUF_HSTL_I
    port(PAD : inout std_logic := 'U'; D, E : in std_logic := 'U'; Y : out std_logic) ;
  end component;

signal TrienAux, D, Q : std_logic ;

begin

  Inv_Tri : INV
  port map(A => Trien, Y => TrienAux);
  DDR_OUT_0_inst : DDR_OUT
  port map(DR => DataR, DF => DataF, CLK => CLK, CLR => CLR, Q => Q);
  DDR_REG_0_inst : DDR_REG
  port map(D => D, CLK => CLK, CLR => CLR, QR => QR, QF => QF);
  BIBUF_HSTL_I_0_inst : BIBUF_HSTL_I
  port map(PAD => PAD, D => Q, E => TrienAux, Y => D);

end DEF_ARCH;
```

# Design Example

Figure 9-9 shows a simple example of a design using both DDR input and DDR output registers. The user can copy the HDL code in Libero SoC software and go through the design flow. Figure 9-10 and Figure 9-11 on page 217 show the netlist and ChipPlanner views of the ddr_test design. Diagrams may vary slightly for different families.

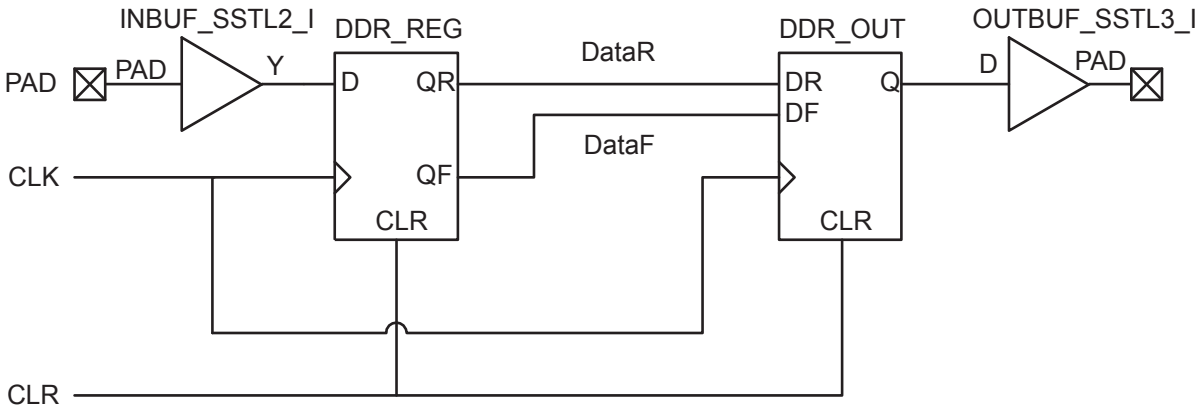


*Figure 9-9* • **Design Example**

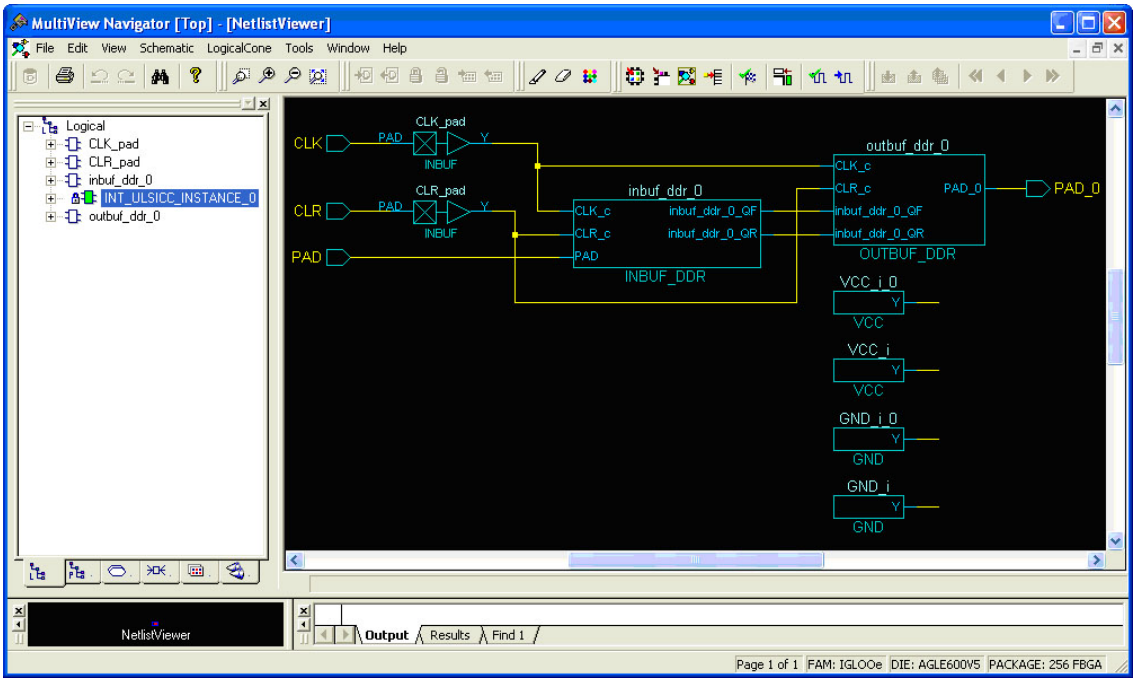


*Figure 9-10* • **DDR Test Design as Seen by NetlistViewer for IGLOO/e Devices**

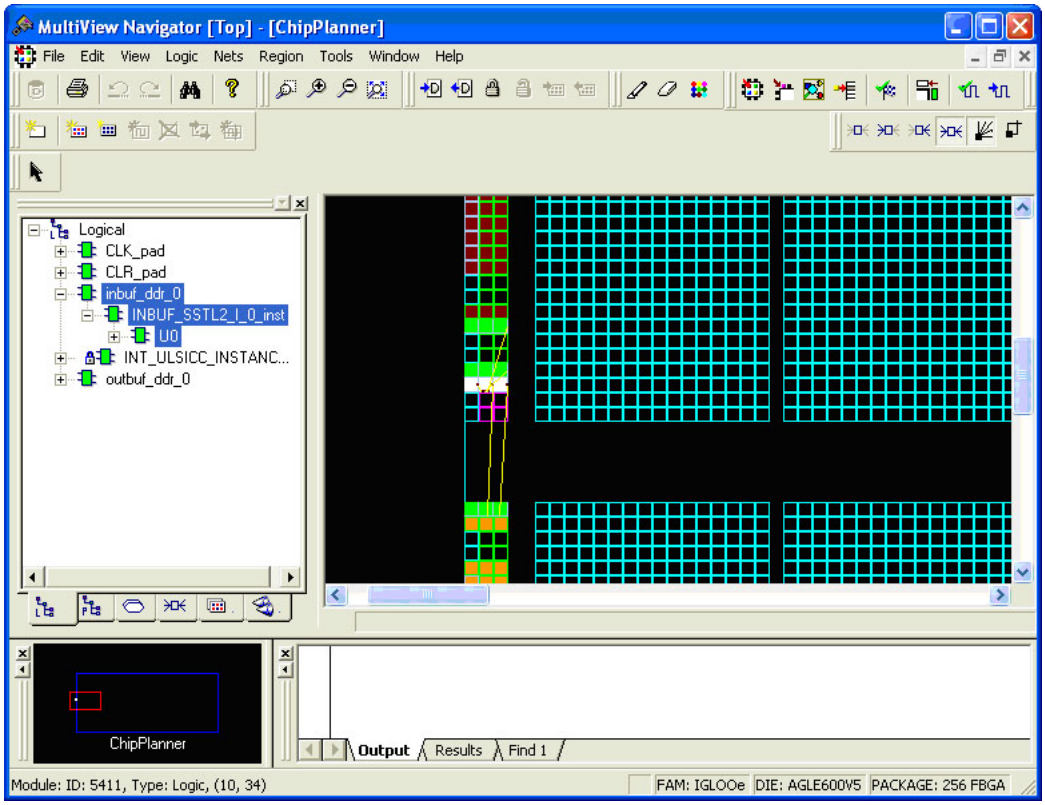


***Figure 9-11*** **• DDR Input/Output Cells as Seen by ChipPlanner for IGLOO/e Devices**

## *Verilog*

```
module Inbuf_ddr(PAD,CLR,CLK,QR,QF);

input PAD, CLR, CLK;
output  QR, QF;

wire Y;

  DDR_REG DDR_REG_0_inst(.D(Y), .CLK(CLK), .CLR(CLR), .QR(QR), .QF(QF));
  INBUF INBUF_0_inst(.PAD(PAD), .Y(Y));

endmodule

module Outbuf_ddr(DataR,DataF,CLR,CLK,PAD);

input DataR, DataF, CLR, CLK;
output  PAD;

wire Q, VCC;

  VCC VCC_1_net(.Y(VCC));
  DDR_OUT DDR_OUT_0_inst(.DR(DataR), .DF(DataF), .CLK(CLK), .CLR(CLR), .Q(Q));
  OUTBUF OUTBUF_0_inst(.D(Q), .PAD(PAD));

endmodule
```

```
module ddr_test(DIN, CLK, CLR, DOUT);

input  DIN, CLK, CLR;
output DOUT;

  Inbuf_ddr Inbuf_ddr (.PAD(DIN), .CLR(clr), .CLK(clk), .QR(qr), .QF(qf));
  Outbuf_ddr Outbuf_ddr (.DataR(qr),.DataF(qf), .CLR(clr), .CLK(clk),.PAD(DOUT));

  INBUF INBUF_CLR (.PAD(CLR), .Y(clr));
  INBUF INBUF_CLK (.PAD(CLK), .Y(clk));

endmodule
```

### Simulation Consideration

Microsemi DDR simulation models use inertial delay modeling by default (versus transport delay modeling). As such, pulses that are shorter than the actual gate delays should be avoided, as they will not be seen by the simulator and may be an issue in post-routed simulations. The user must be aware of the default delay modeling and must set the correct delay model in the simulator as needed.

## Conclusion

Fusion, IGLOO, and ProASIC3 devices support a wide range of DDR applications with different I/O standards and include built-in DDR macros. The powerful capabilities provided by SmartGen and its GUI can simplify the process of including DDR macros in designs and minimize design errors. Additional considerations should be taken into account by the designer in design floorplanning and placement of I/O flip-flops to minimize datapath skew and to help improve system timing margins. Other system-related issues to consider include PLL and clock partitioning.

# List of Changes

The following table lists critical changes that were made in each revision of the chapter.

| Date | Changes | Page |
|---|---|---|
| July 2010 | This chapter is no longer published separately with its own part number and version but is now part of several FPGA fabric user's guides. | N/A |
| | Notes were added where appropriate to point out that IGLOO nano and ProASIC3 nano devices do not support differential inputs (SAR 21449). | N/A |
| v1.4 (December 2008) | IGLOO nano and ProASIC3 nano devices were added to Table 9-1 • Flash-Based FPGAs. | 206 |
| | The "I/O Cell Architecture" section was updated with information applicable to nano devices. | 207 |
| | The output buffer (OUTBUF_SSTL3_I) input was changed to D, instead of Q, in Figure 9-1 • DDR Support in Low Power Flash Devices, Figure 9-3 • DDR Output Register (SSTL3 Class I), Figure 9-6 • DDR Output Register (SSTL3 Class I), Figure 9-7 • DDR Tristate Output Register, LOW Enable, 8 mA, Pull-Up (LVTTL), and the output from the DDR_OUT macro was connected to the input of the TRIBUFF macro in Figure 9-7 • DDR Tristate Output Register, LOW Enable, 8 mA, Pull-Up (LVTTL). | 205, 209, 212, 213 |
| v1.3 (October 2008) | The "Double Data Rate (DDR) Architecture" section was updated to include mention of the AFS600 and AFS1500 devices. | 205 |
| | The "DDR Support in Flash-Based Devices" section was revised to include new families and make the information more concise. | 206 |
| v1.2 (June 2008) | The following changes were made to the family descriptions in Table 9-1 • Flash-Based FPGAs:<br>• ProASIC3L was updated to include 1.5 V.<br>• The number of PLLs for ProASIC3E was changed from five to six. | 206 |
| v1.1 (March 2008) | The "IGLOO Terminology" section and "ProASIC3 Terminology" section are new. | 206 |

# 10 – Programming Flash Devices

## Introduction

This document provides an overview of the various programming options available for the Microsemi flash families. The electronic version of this document includes active links to all programming resources, which are available at http://www.microsemi.com/soc/products/hardware/default.aspx. For Microsemi antifuse devices, refer to the *Programming Antifuse Devices* document.

## Summary of Programming Support

FlashPro4 and FlashPro3 are high-performance in-system programming (ISP) tools targeted at the latest generation of low power flash devices offered by the SmartFusion,® Fusion, IGLOO,® and ProASIC®3 families, including ARM-enabled devices. FlashPro4 and FlashPro3 offer extremely high performance through the use of USB 2.0, are high-speed compliant for full use of the 480 Mbps bandwidth, and can program ProASIC3 devices in under 30 seconds. Powered exclusively via USB, FlashPro4 and FlashPro3 provide a VPUMP voltage of 3.3 V for programming these devices.

FlashPro4 replaced FlashPro3 in 2010. FlashPro4 supports SmartFusion, Fusion, ProASIC3,and IGLOO devices as well as future generation flash devices. FlashPro4 also adds 1.2 V programming for IGLOO nano V2 devices. FlashPro4 is compatible with FlashPro3; however it adds a programming mode (PROG_MODE) signal to the previously unused pin 4 of the JTAG connector. The PROG_MODE goes high during programming and can be used to turn on a 1.5 V external supply for those devices that require 1.5 V for programming. If both FlashPro3 and FlashPro4 programmers are used for programming the same boards, pin 4 of the JTAG connector must not be connected to anything on the board because FlashPro4 uses pin 4 for PROG_MODE.

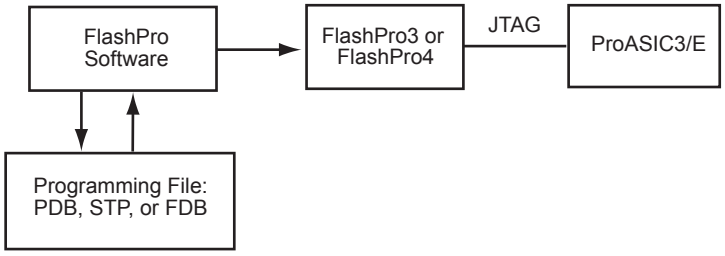


***Figure 10-1*** **• FlashPro Programming Setup**

# Programming Support in Flash Devices

The flash FPGAs listed in Table 10-1 support flash in-system programming and the functions described in this document.

***Table 10-1* • Flash-Based FPGAs**

| Series | Family* | Description |
|---|---|---|
| IGLOO | IGLOO | Ultra-low power 1.2 V to 1.5 V FPGAs with Flash*Freeze technology |
| | IGLOOe | Higher density IGLOO FPGAs with six PLLs and additional I/O standards |
| | IGLOO nano | The industry's lowest-power, smallest-size solution, supporting 1.2 V to 1.5 V core voltage with Flash*Freeze technology |
| | IGLOO PLUS | IGLOO FPGAs with enhanced I/O capabilities |
| ProASIC3 | ProASIC3 | Low power, high-performance 1.5 V FPGAs |
| | ProASIC3E | Higher density ProASIC3 FPGAs with six PLLs and additional I/O standards |
| | ProASIC3 nano | Lowest-cost solution with enhanced I/O capabilities |
| | ProASIC3L | ProASIC3 FPGAs supporting 1.2 V to 1.5 V core voltage with Flash*Freeze technology |
| | RT ProASIC3 | Radiation-tolerant RT3PE600L and RT3PE3000L |
| | Military ProASIC3/EL | Military temperature A3PE600L, A3P1000, and A3PE3000L |
| | Automotive ProASIC3 | ProASIC3 FPGAs qualified for automotive applications |
| SmartFusion | SmartFusion | Mixed-signal FPGA integrating FPGA fabric, programmable microcontroller subsystem (MSS), including programmable analog and ARM® Cortex™-M3 hard processor and flash memory in a monolithic device |
| Fusion | Fusion | Mixed signal FPGA integrating ProASIC3 FPGA fabric, programmable analog block, support for ARM® Cortex™-M1 soft processors, and flash memory into a monolithic device |
| ProASIC | ProASIC | First generation ProASIC devices |
| | ProASIC^PLUS | Second generation ProASIC devices |

*Note: *The device names link to the appropriate datasheet, including product brief, DC and switching characteristics, and packaging information.*

## *IGLOO Terminology*

In documentation, the terms IGLOO series and IGLOO devices refer to all of the IGLOO devices as listed in Table 10-1. Where the information applies to only one product line or limited devices, these exclusions will be explicitly stated.

## *ProASIC3 Terminology*

In documentation, the terms ProASIC3 series and ProASIC3 devices refer to all of the ProASIC3 devices as listed in Table 10-1. Where the information applies to only one product line or limited devices, these exclusions will be explicitly stated.

To further understand the differences between the IGLOO and ProASIC3 devices, refer to the *Industry's Lowest Power FPGAs Portfolio*.

# General Flash Programming Information

## Programming Basics

When choosing a programming solution, there are a number of options available. This section provides a brief overview of those options. The next sections provide more detail on those options as they apply to Microsemi FPGAs.

### *Reprogrammable or One-Time-Programmable (OTP)*

Depending on the technology chosen, devices may be reprogrammable or one-time-programmable. As the name implies, a reprogrammable device can be programmed many times. Generally, the contents of such a device will be completely overwritten when it is reprogrammed. All Microsemi flash devices are reprogrammable.

An OTP device is programmable one time only. Once programmed, no more changes can be made to the contents. Microsemi flash devices provide the option of disabling the reprogrammability for security purposes. This combines the convenience of reprogrammability during design verification with the security of an OTP technology for highly sensitive designs.

### *Device Programmer or In-System Programming*

There are two fundamental ways to program an FPGA: using a device programmer or, if the technology permits, using in-system programming. A device programmer is a piece of equipment in a lab or on the production floor that is used for programming FPGA devices. The devices are placed into a socket mounted in a programming adapter module, and the appropriate electrical interface is applied. The programmed device can then be placed on the board. A typical programmer, used during development, programs a single device at a time and is referred to as a single-site engineering programmer.

With ISP, the device is already mounted onto the system printed circuit board when programming occurs. Typically, ISD programming is performed via a JTAG interface on the FPGA. The JTAG pins can be controlled either by an on-board resource, such as a microprocessor, or by an off-board programmer through a header connection. Once mounted, it can be programmed repeatedly and erased. If the application requires it, the system can be designed to reprogram itself using a microprocessor, without the use of any external programmer.

If multiple devices need to be programmed with the same program, various multi-site programming hardware is available in order to program many devices in parallel. Microsemi In House Programming is also available for this purpose.

## Programming Features for Microsemi Devices

### *Flash Devices*

The flash devices supplied by Microsemi are reprogrammable by either a generic device programmer or ISP. Microsemi supports ISP using JTAG, which is supported by the FlashPro4 and FlashPro3, FlashPro Lite, Silicon Sculptor 3, and Silicon Sculptor II programmers.

Levels of ISP support vary depending on the device chosen:

- All SmartFusion, Fusion, IGLOO, and ProASIC3 devices support ISP.
- IGLOO, IGLOOe, IGLOO nano V5, and IGLOO PLUS devices can be programmed in-system when the device is using a 1.5 V supply voltage to the FPGA core.
- IGLOO nano V2 devices can be programmed at 1.2 V core voltage (when using FlashPro4 only) or 1.5 V. IGLOO nano V5 devices are programmed with a VCC core voltage of 1.5 V.

## Types of Programming for Flash Devices

The number of devices to be programmed will influence the optimal programming methodology. Those available are listed below:

- In-system programming
  - Using a programmer
  - Using a microprocessor or microcontroller
- Device programmers
  - Single-site programmers
  - Multi-site programmers, batch programmers, or gang programmers
  - Automated production (robotic) programmers
- Volume programming services
  - Microsemi in-house programming
  - Programming centers

### *In-System Programming*

#### Device Type Supported: Flash

ISP refers to programming the FPGA after it has been mounted on the system printed circuit board. The FPGA may be preprogrammed and later reprogrammed using ISP.

The advantage of using ISP is the ability to update the FPGA design many times without any changes to the board. This eliminates the requirement of using a socket for the FPGA, saving cost and improving reliability. It also reduces programming hardware expenses, as the ISP methodology is die-/package-independent.

There are two methods of in-system programming: external and internal.

- Programmer ISP—Refer to the "In-System Programming (ISP) of Microsemi's Low Power Flash Devices Using FlashPro4/3/3X" section on page 261 for more information.

  Using an external programmer and a cable, the device can be programmed through a header on the system board. In Microsemi SoC Products Group documentation, this is referred to as external ISP. Microsemi provides FlashPro4, FlashPro3, FlashPro Lite, or Silicon Sculptor 3 to perform external ISP. Note that Silicon Sculptor II and Silicon Sculptor 3 can only provide ISP for ProASIC and ProASIC$^{PLUS®}$ families, not for SmartFusion, Fusion, IGLOO, or ProASIC3. Silicon Sculptor II and Silicon Sculptor 3 can be used for programming ProASIC and ProASIC$^{PLUS}$ devices by using an adapter module (part number SMPA-ISP-ACTEL-3).
  - Advantages: Allows local control of programming and data files for maximum security. The programming algorithms and hardware are available from Microsemi. The only hardware required on the board is a programming header.
  - Limitations: A negligible board space requirement for the programming header and JTAG signal routing
- Microprocessor ISP—Refer to the "Microprocessor Programming of Microsemi's Low Power Flash Devices" chapter of an appropriate FPGA fabric user's guide for more information.

  Using a microprocessor and an external or internal memory, you can store the program in memory and use the microprocessor to perform the programming. In Microsemi documentation, this is referred to as internal ISP. Both the code for the programming algorithm and the FPGA programming file must be stored in memory on the board. Programming voltages must also be generated on the board.
  - Advantages: The programming code is stored in the system memory. An external programmer is not required during programming.
  - Limitations: This is the approach that requires the most design work, since some way of getting and/or storing the data is needed; a system interface to the device must be designed; and the low-level API to the programming firmware must be written and linked into the code provided by Microsemi. While there are benefits to this methodology, serious thought and planning should go into the decision.

## Device Programmers

### Single Device Programmer

Single device programmers are used to program a device before it is mounted on the system board.

The advantage of using device programmers is that no programming hardware is required on the system board. Therefore, no additional components or board space are required.

Adapter modules are purchased with single device programmers to support the FPGA packages used. The FPGA is placed in the adapter module and the programming software is run from a PC. Microsemi supplies the programming software for all of the Microsemi programmers. The software allows for the selection of the correct die/package and programming files. It will then program and verify the device.

- Single-site programmers

  A single-site programmer programs one device at a time. Microsemi offers Silicon Sculptor 3, built by BP Microsystems, as a single-site programmer. Silicon Sculptor 3 and associated software are available only from Microsemi.

  – Advantages: Lower cost than multi-site programmers. No additional overhead for programming on the system board. Allows local control of programming and data files for maximum security. Allows on-demand programming on-site.

  – Limitations: Only programs one device at a time.

- Multi-site programmers

Often referred to as batch or gang programmers, multi-site programmers can program multiple devices at the same time using the same programming file. This is often used for large volume programming and by programming houses. The sites often have independent processors and memory enabling the sites to operate concurrently, meaning each site may start programming the same file independently. This enables the operator to change one device while the other sites continue programming, which increases throughput. Multiple adapter modules for the same package are required when using a multi-site programmer. Silicon Sculptor I, II, and 3 programmers can be cascaded to program multiple devices in a chain. Multi-site programmers, such as the BP2610 and BP2710, can also be purchased from BP Microsystems. When using BP Microsystems multi-site programmers, users must use programming adapter modules available only from Microsemi. Visit the Microsemi SoC Products Group website to view the part numbers of the desired adapter module:

http://www.microsemi.com/soc/products/hardware/program_debug/ss/modules.aspx.

Also when using BP Microsystems programmers, customers must use Microsemi programming software to ensure the best programming result will occur.

  – Advantages: Provides the capability of programming multiple devices at the same time. No additional overhead for programming on the system board. Allows local control of programming and data files for maximum security.

  – Limitations: More expensive than a single-site programmer

- Automated production (robotic) programmers

Automated production programmers are based on multi-site programmers. They consist of a large input tray holding multiple parts and a robotic arm to select and place parts into appropriate programming sockets automatically. When the programming of the parts is complete, the parts are removed and placed in a finished tray. The automated programmers are often used in volume programming houses to program parts for which the programming time is small. BP Microsystems part number BP4710, BP4610, BP3710 MK2, and BP3610 are available for this purpose. Auto programmers cannot be used to program RTAX-S devices.

Where an auto-programmer is used, the appropriate open-top adapter module from BP Microsystems must be used.

## Volume Programming Services

### Device Type Supported: Flash and Antifuse

Once the design is stable for applications with large production volumes, preprogrammed devices can be purchased. Table 10-2 describes the volume programming services.

***Table 10-2* • Volume Programming Services**

| Programmer | Vendor | Availability |
|---|---|---|
| In-House Programming | Microsemi | Contact Microsemi Sales |
| Distributor Programming Centers | Memec Unique | Contact Distribution |
| Independent Programming Centers | Various | Contact Vendor |

Advantages: As programming is outsourced, this solution is easier to implement than creating a substantial in-house programming capability. As programming houses specialize in large-volume programming, this is often the most cost-effective solution.

Limitations: There are some logistical issues with the use of a programming service provider, such as the transfer of programming files and the approval of First Articles. By definition, the programming file must be released to a third-party programming house. Nondisclosure agreements (NDAs) can be signed to help ensure data protection; however, for extremely security-conscious designs, this may not be an option.

- Microsemi In-House Programming

  When purchasing Microsemi devices in volume, IHP can be requested as part of the purchase. If this option is chosen, there is a small cost adder for each device programmed. Each device is marked with a special mark to distinguish it from blank parts. Programming files for the design will be sent to Microsemi. Sample parts with the design programmed, First Articles, will be returned for customer approval. Once approval of First Articles has been received, Microsemi will proceed with programming the remainder of the order. To request Microsemi IHP, contact your local Microsemi representative.

- Distributor Programming Centers

  If purchases are made through a distributor, many distributors will provide programming for their customers. Consult with your preferred distributor about this option.

## Programming Solutions

Details for the available programmers can be found in the programmer user's guides listed in the "Related Documents" section on page 231.

All the programmers except FlashPro4, FlashPro3, FlashPro Lite, and FlashPro require adapter modules, which are designed to support device packages. All modules are listed on the Microsemi SoC Products Group website at http://www.microsemi.com/soc/products/hardware/program_debug/ss/modules.aspx. They are not listed in this document, since this list is updated frequently with new package options and any upgrades required to improve programming yield or support new families.

***Table 10-3* • Programming Solutions**

| Programmer | Vendor | ISP | Single Device | Multi-Device | Availability |
|---|---|---|---|---|---|
| FlashPro4 | Microsemi | Only | Yes | Yes[1] | Available |
| FlashPro3 | Microsemi | Only | Yes | Yes[1] | Available |
| FlashPro Lite[2] | Microsemi | Only | Yes | Yes[1] | Available |
| FlashPro | Microsemi | Only | Yes | Yes[1] | Discontinued |
| Silicon Sculptor 3 | Microsemi | Yes[3] | Yes | Cascade option (up to two) | Available |
| Silicon Sculptor II | Microsemi | Yes[3] | Yes | Cascade option (up to two) | Available |
| Silicon Sculptor | Microsemi | Yes | Yes | Cascade option (up to four) | Discontinued |
| Sculptor 6X | Microsemi | No | Yes | Yes | Discontinued |
| BP MicroProgrammers | BP Microsystems | No | Yes | Yes | Contact BP Microsystems at www.bpmicro.com |

*Notes:*

1. *Multiple devices can be connected in the same JTAG chain for programming.*
2. *If FlashPro Lite is used for programming, the programmer derives all of its power from the target pc board's VDD supply. The FlashPro Lite's VPP and VPN power supplies use the target pc board's VDD as a power source. The target pc board must supply power to both the VDDP and VDD power pins of the ProASIC$^{PLUS}$ device in addition to supplying VDD to the FlashPro Lite. The target pc board needs to provide at least 500 mA of current to the FlashPro Lite VDD connection for programming.*
3. *Silicon Sculptor II and Silicon Sculptor 3 can only provide ISP for ProASIC and ProASIC$^{PLUS}$ families, not for Fusion, IGLOO, or ProASIC3 devices.*

## Programmer Ordering Codes

The products shown in Table 10-4 can be ordered through Microsemi sales and will be shipped directly from Microsemi. Products can also be ordered from Microsemi distributors, but will still be shipped directly from Microsemi. Table 10-4 includes ordering codes for the full kit, as well as codes for replacement items and any related hardware. Some additional products can be purchased from external suppliers for use with the programmers. Ordering codes for adapter modules used with Silicon Sculptor are available at http://www.microsemi.com/soc/products/hardware/program_debug/ss/modules.aspx.

***Table 10-4* • Programming Ordering Codes**

| Description | Vendor | Ordering Code | Comment |
|---|---|---|---|
| FlashPro4 ISP programmer | Microsemi | FLASHPRO 4 | Uses a 2×5, RA male header connector |
| FlashPro Lite ISP programmer | Microsemi | FLASHPRO LITE | Supports small programming header or large header through header converter (not included) |
| Silicon Sculptor 3 | Microsemi | SILICON-SCULPTOR 3 | USB 2.0 high-speed production programmer |
| Silicon Sculptor II | Microsemi | SILICON-SCULPTOR II | Requires add-on adapter modules to support devices |
| Silicon Sculptor ISP module | Microsemi | SMPA-ISP-ACTEL-3-KIT | Ships with both large and small header support |
| ISP cable for small header | Microsemi | ISP-CABLE-S | Supplied with SMPA-ISP-ACTEL-3-KIT |
| ISP cable for large header | Microsemi | PA-ISP-CABLE | Supplied with SMPA-ISP-ACTEL-3-KIT |

## Programmer Device Support

Refer to www.microsemi.com/soc for the current information on programmer and device support.

## Certified Programming Solutions

The Microsemi-certified programmers for flash devices are FlashPro4, FlashPro3, FlashPro Lite, FlashPro, Silicon Sculptor II, Silicon Sculptor 3, and any programmer that is built by BP Microsystems. All other programmers are considered noncertified programmers.

- FlashPro4, FlashPro3, FlashPro Lite, FlashPro

  The Microsemi family of FlashPro device programmers provides in-system programming in an easy-to-use, compact system that supports all flash families. Whether programming a board containing a single device or multiple devices connected in a chain, the Microsemi line of FlashPro programmers enables fast programming and reprogramming. Programming with the FlashPro series of programmers saves board space and money as it eliminates the need for sockets on the board. There are no built-in algorithms, so there is no delay between product release and programming support. The FlashPro programmer is no longer available.

- Silicon Sculptor 3, Silicon Sculptor II

  Silicon Sculptor 3 and Silicon Sculptor II are robust, compact, single-device programmers with standalone software for the PC. They are designed to enable concurrent programming of multiple units from the same PC with speeds equivalent to or faster than previous Microsemi programmers.

- Noncertified Programmers

  Microsemi does not test programming solutions from other vendors, and DOES NOT guarantee programming yield. Also, Microsemi will not perform any failure analysis on devices programmed on non-certified programmers. Please refer to the *Programming and Functional Failure Guidelines* document for more information.

- Programming Centers

  Microsemi programming hardware policy also applies to programming centers. Microsemi expects all programming centers to use certified programmers to program Microsemi devices. If a programming center uses noncertified programmers to program Microsemi devices, the "Noncertified Programmers" policy applies.

# Important Programming Guidelines

## Preprogramming Setup

Before programming, several steps are required to ensure an optimal programming yield.

### *Use Proper Handling and Electrostatic Discharge (ESD) Precautions*

Microsemi FPGAs are sensitive electronic devices that are susceptible to damage from ESD and other types of mishandling. For more information about ESD, refer to the *Quality and Reliability Guide,* beginning with page 41.

### *Use the Latest Version of the Designer Software to Generate Your Programming File (recommended)*

The files used to program Microsemi flash devices (*.bit, *.stp, *.pdb) contain important information about the switches that will be programmed in the FPGA. Find the latest version and corresponding release notes at http://www.microsemi.com/soc/download/software/designer/. Also, programming files must always be zipped during file transfer to avoid the possibility of file corruption.

### *Use the Latest Version of the Programming Software*

The programming software is frequently updated to accommodate yield enhancements in FPGA manufacturing. These updates ensure maximum programming yield and minimum programming times. Before programming, always check the version of software being used to ensure it is the most recent. Depending on the programming software, refer to one of the following:

- FlashPro: http://www.microsemi.com/soc/download/program_debug/flashpro/
- Silicon Sculptor: http://www.microsemi.com/soc/download/program_debug/ss/

### *Use the Most Recent Adapter Module with Silicon Sculptor*

Occasionally, Microsemi makes modifications to the adapter modules to improve programming yields and programming times. To identify the latest version of each module before programming, visit http://www.microsemi.com/soc/products/hardware/program_debug/ss/modules.aspx.

### *Perform Routine Hardware Self-Diagnostic Test*

- Adapter modules must be regularly cleaned. Adapter modules need to be inserted carefully into the programmer to make sure the DIN connectors (pins at the back side) are not damaged.
- FlashPro

  The self-test is only applicable when programming with FlashPro and FlashPro3 programmers. It is not supported with FlashPro4 or FlashPro Lite. To run the self-diagnostic test, follow the instructions given in the "Performing a Self-Test" section of http://www.microsemi.com/soc/documents/FlashPro_UG.pdf.
- Silicon Sculptor

  The self-diagnostic test verifies correct operation of the pin drivers, power supply, CPU, memory, and adapter module. This test should be performed with an adapter module installed and before every programming session. At minimum, the test must be executed every week. To perform self-diagnostic testing using the Silicon Sculptor software, perform the following steps, depending on the operating system:

  – DOS: From anywhere in the software, type **ALT + D**.

  – Windows: Click **Device** > choose **Actel Diagnostic** > select the **Test** tab > click **OK**.

  Silicon Sculptor programmers must be verified annually for calibration. Refer to the *Silicon Sculptor Verification of Calibration Work Instruction* document on the website.

### Signal Integrity While Using ISP

For ISP of flash devices, customers are expected to follow the board-level guidelines provided on the Microsemi SoC Products Group website. These guidelines are discussed in the datasheets and application notes (refer to the “Related Documents” section of the datasheet for application note links). Customers are also expected to troubleshoot board-level signal integrity issues by measuring voltages and taking oscilloscope plots.

## Programming Failure Allowances

Microsemi has strict policies regarding programming failure allowances. Please refer to *Programming and Functional Failure Guidelines* on the Microsemi SoC Products Group website for details.

## Contacting the Customer Support Group

Highly skilled engineers staff the Customer Applications Center from 7:00 A.M. to 6:00 P.M., Pacific time, Monday through Friday. You can contact the center by one of the following methods:

### Electronic Mail

You can communicate your technical questions to our email address and receive answers back by email, fax, or phone. Also, if you have design problems, you can email your design files to receive assistance. Microsemi monitors the email account throughout the day. When sending your request to us, please be sure to include your full name, company name, and contact information for efficient processing of your request. The technical support email address is soc_tech@microsemi.com.

### Telephone

Our Technical Support Hotline answers all calls. The center retrieves information, such as your name, company name, telephone number, and question. Once this is done, a case number is assigned. Then the center forwards the information to a queue where the first available applications engineer receives the data and returns your call. The phone hours are from 7:00 A.M. to 6:00 P.M., Pacific time, Monday through Friday.

The Customer Applications Center number is (800) 262-1060.

European customers can call +44 (0) 1256 305 600.

# Related Documents

Below is a list of related documents, their location on the Microsemi SoC Products Group website, and a brief summary of each document.

## Application Notes

*Programming Antifuse Devices*

http://www.microsemi.com/soc/documents/AntifuseProgram_AN.pdf

*Implementation of Security in Actel's ProASIC and ProASIC PLUS Flash-Based FPGAs*

http://www.microsemi.com/soc/documents/Flash_Security_AN.pdf

## User's Guides

### *FlashPro Programmers*

FlashPro4,[1] FlashPro3, FlashPro Lite, and FlashPro[2]

http://www.microsemi.com/soc/products/hardware/program_debug/flashpro/default.aspx

*FlashPro User's Guide*

http://www.microsemi.com/soc/documents/FlashPro_UG.pdf

The FlashPro User's Guide includes hardware and software setup, self-test instructions, use instructions, and a troubleshooting / error message guide.

### *Silicon Sculptor 3 and Silicon Sculptor II*

http://www.microsemi.com/soc/products/hardware/program_debug/ss/default.aspx

## Other Documents

http://www.microsemi.com/soc/products/solutions/security/default.aspx#flashlock

The security resource center describes security in Microsemi Flash FPGAs.

*Quality and Reliability Guide*

http://www.microsemi.com/soc/documents/RelGuide.pdf

*Programming and Functional Failure Guidelines*

http://www.microsemi.com/soc/documents/FA_Policies_Guidelines_5-06-00002.pdf

1. *FlashPro4 replaced FlashPro3 in Q1 2010.*
2. *FlashPro is no longer available.*

# List of Changes

The following table lists critical changes that were made in each revision of the chapter.

| Date | Changes | Page |
|---|---|---|
| July 2010 | FlashPro4 is a replacement for FlashPro3 and has been added to this chapter. FlashPro is no longer available. | N/A |
| | The chapter was updated to include SmartFusion devices. | N/A |
| | The following were deleted:<br>"Live at Power-Up (LAPU) or Boot PROM" section<br>"Design Security" section<br>Table 14-2 • Programming Features for Actel Devices and much of the text in the "Programming Features for Microsemi Devices" section<br>"Programming Flash FPGAs" section<br>"Return Material Authorization (RMA) Policies" section | N/A |
| | The "Device Programmers" section was revised. | 225 |
| | The Independent Programming Centers information was removed from the "Volume Programming Services" section. | 226 |
| | Table 10-3 • Programming Solutions was revised to add FlashPro4 and note that FlashPro is discontinued. A note was added for FlashPro Lite regarding power supply requirements. | 227 |
| | Most items were removed from Table 10-4 • Programming Ordering Codes, including FlashPro3 and FlashPro. | 228 |
| | The "Programmer Device Support" section was deleted and replaced with a reference to the Microsemi SoC Products Group website for the latest information. | 228 |
| | The "Certified Programming Solutions" section was revised to add FlashPro4 and remove Silicon Sculptor I and Silicon Sculptor 6X. Reference to *Programming and Functional Failure Guidelines* was added. | 228 |
| | The file type *.pdb was added to the "Use the Latest Version of the Designer Software to Generate Your Programming File (recommended)" section. | 229 |
| | Instructions on cleaning and careful insertion were added to the "Perform Routine Hardware Self-Diagnostic Test" section. Information was added regarding testing Silicon Sculptor programmers with an adapter module installed before every programming session verifying their calibration annually. | 229 |
| | The "Signal Integrity While Using ISP" section is new. | 230 |
| | The "Programming Failure Allowances" section was revised. | 230 |

| Date | Changes | Page |
|---|---|---|
| v1.3<br>(December 2008) | The "Programming Support in Flash Devices" section was updated to include IGLOO nano and ProASIC3 nano devices. | 222 |
| | The "Flash Devices" section was updated to include information for IGLOO nano devices. The following sentence was added: IGLOO PLUS devices can also be operated at any voltage between 1.2 V and 1.5 V; the Designer software allows 50 mV increments in the voltage. | 223 |
| | Table 10-4 · Programming Ordering Codes was updated to replace FP3-26PIN-ADAPTER with FP3-10PIN-ADAPTER-KIT. | 228 |
| | Table 14-6 · Programmer Device Support was updated to add IGLOO nano and ProASIC3 nano devices. AGL400 was added to the IGLOO portion of the table. | 317 |
| v1.2<br>(October 2008) | The "Programming Support in Flash Devices" section was revised to include new families and make the information more concise. | 222 |
| | Figure 10-1 · FlashPro Programming Setup and the "Programming Support in Flash Devices" section are new. | 221, 222 |
| | Table 14-6 · Programmer Device Support was updated to include A3PE600L with the other ProASIC3L devices, and the RT ProASIC3 family was added. | 317 |
| v1.1<br>(March 2008) | The "Flash Devices" section was updated to include the IGLOO PLUS family. The text, "Voltage switching is required in-system to switch from a 1.2 V core to 1.5 V core for programming," was revised to state, "Although the device can operate at 1.2 V core voltage, the device can only be reprogrammed when the core voltage is 1.5 V. Voltage switching is required in-system to switch from a 1.2 V supply ($V_{CC}$, $V_{CCI}$, and $V_{JTAG}$) to 1.5 V for programming." | 223 |
| | The ProASIC3L family was added to Table 14-6 · Programmer Device Support as a separate set of rows rather than combined with ProASIC3 and ProASIC3E devices. The IGLOO PLUS family was included, and AGL015 and A3P015 were added. | 317 |

# 11 – Security in Low Power Flash Devices

## Security in Programmable Logic

The need for security on FPGA programmable logic devices (PLDs) has never been greater than today. If the contents of the FPGA can be read by an external source, the intellectual property (IP) of the system is vulnerable to unauthorized copying. Fusion, IGLOO, and ProASIC3 devices contain state-of-the-art circuitry to make the flash-based devices secure during and after programming. Low power flash devices have a built-in 128-bit Advanced Encryption Standard (AES) decryption core (except for 30 k gate devices and smaller). The decryption core facilitates secure in-system programming (ISP) of the FPGA core array fabric, the FlashROM, and the Flash Memory Blocks (FBs) in Fusion devices. The FlashROM, Flash Blocks, and FPGA core fabric can be programmed independently of each other, allowing the FlashROM or Flash Blocks to be updated without the need for change to the FPGA core fabric.

Microsemi has incorporated the AES decryption core into the low power flash devices and has also included the Microsemi flash-based lock technology, FlashLock.® Together, they provide leading-edge security in a programmable logic device. Configuration data loaded into a device can be decrypted prior to being written to the FPGA core using the AES 128-bit block cipher standard. The AES encryption key is stored in on-chip, nonvolatile flash memory.

This document outlines the security features offered in low power flash devices, some applications and uses, as well as the different software settings for each application.

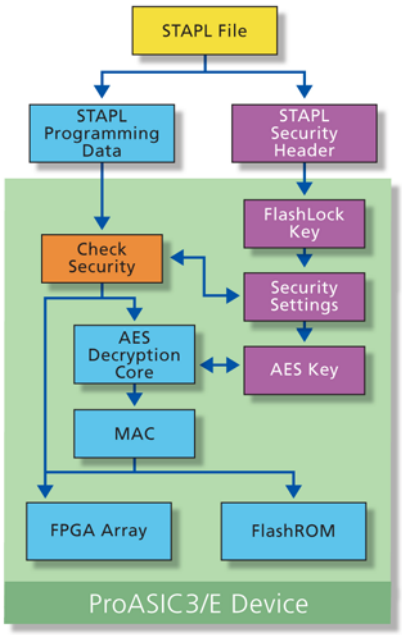


***Figure 11-1*** **• Overview on Security**

# Security Support in Flash-Based Devices

The flash FPGAs listed in Table 11-1 support the security feature and the functions described in this document.

***Table 11-1* • Flash-Based FPGAs**

| Series | Family* | Description |
|---|---|---|
| IGLOO | IGLOO | Ultra-low power 1.2 V to 1.5 V FPGAs with Flash*Freeze technology |
| | IGLOOe | Higher density IGLOO FPGAs with six PLLs and additional I/O standards |
| | IGLOO nano | The industry's lowest-power, smallest-size solution |
| | IGLOO PLUS | IGLOO FPGAs with enhanced I/O capabilities |
| ProASIC3 | ProASIC3 | Low power, high-performance 1.5 V FPGAs |
| | ProASIC3E | Higher density ProASIC3 FPGAs with six PLLs and additional I/O standards |
| | ProASIC3 nano | Lowest-cost solution with enhanced I/O capabilities |
| | ProASIC3L | ProASIC3 FPGAs supporting 1.2 V to 1.5 V with Flash*Freeze technology |
| | RT ProASIC3 | Radiation-tolerant RT3PE600L and RT3PE3000L |
| | Military ProASIC3/EL | Military temperature A3PE600L, A3P1000, and A3PE3000L |
| | Automotive ProASIC3 | ProASIC3 FPGAs qualified for automotive applications |
| Fusion | Fusion | Mixed signal FPGA integrating ProASIC3 FPGA fabric, programmable analog block, support for ARM Cortex™-M1 soft processors, and flash memory into a monolithic device |

*Note: *The device names link to the appropriate datasheet, including product brief, DC and switching characteristics, and packaging information.*

## *IGLOO Terminology*

In documentation, the terms IGLOO series and IGLOO devices refer to all of the IGLOO devices as listed in Table 11-1. Where the information applies to only one product line or limited devices, these exclusions will be explicitly stated.

## *ProASIC3 Terminology*

In documentation, the terms ProASIC3 series and ProASIC3 devices refer to all of the ProASIC3 devices as listed in Table 11-1. Where the information applies to only one product line or limited devices, these exclusions will be explicitly stated.

To further understand the differences between the IGLOO and ProASIC3 devices, refer to the *Industry's Lowest Power FPGAs Portfolio*.

# Security Architecture

Fusion, IGLOO, and ProASIC3 devices have been designed with the most comprehensive programming logic design security in the industry. In the architecture of these devices, security has been designed into the very fabric. The flash cells are located beneath seven metal layers, and the use of many device design and layout techniques makes invasive attacks difficult. Since device layers cannot be removed without disturbing the charge on the programmed (or erased) flash gates, devices cannot be easily deconstructed to decode the design. Low power flash devices are unique in being reprogrammable and having inherent resistance to both invasive and noninvasive attacks on valuable IP. Secure, remote ISP is now possible with AES encryption capability for the programming file during electronic transfer. Figure 11-2 shows a view of the AES decryption core inside an IGLOO device; Figure 11-3 on page 238 shows the AES decryption core inside a Fusion device. The AES core is used to decrypt the encrypted programming file when programming.

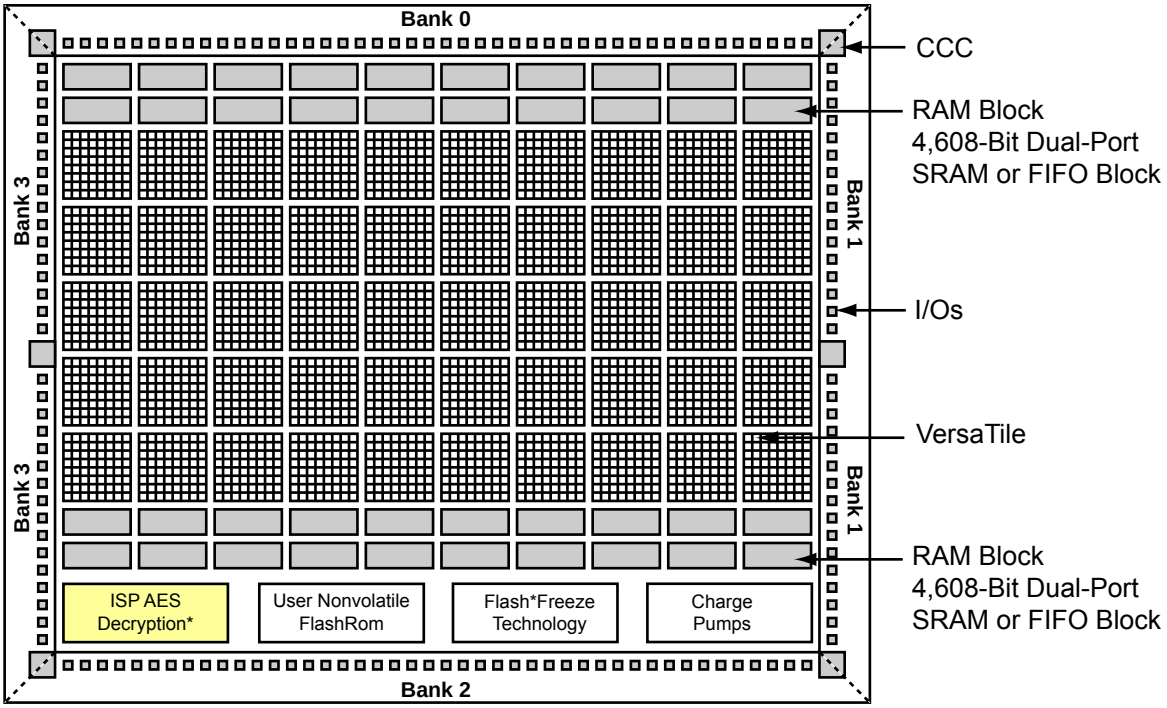


*Note: *ISP AES Decryption is not supported by 30 k gate devices and smaller. For details of other architecture features by device, refer to the appropriate family datasheet.*

***Figure 11-2* • Block Representation of the AES Decryption Core in IGLOO and ProASIC3 Devices**

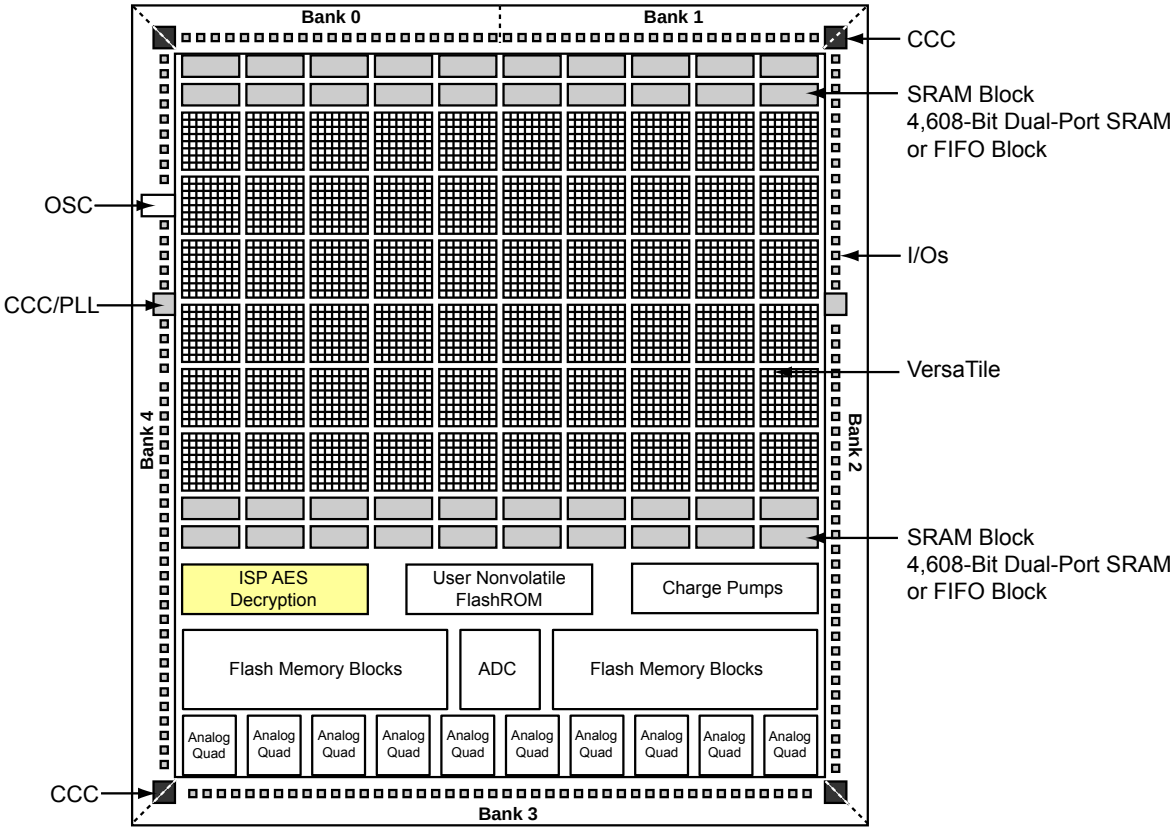


***Figure 11-3*** **• Block Representation of the AES Decryption Core in a Fusion AFS600 FPGA**

# Security Features

IGLOO and ProASIC3 devices have two entities inside: FlashROM and the FPGA core fabric. Fusion devices contain three entities: FlashROM, FBs, and the FPGA core fabric. The parts can be programmed or updated independently with a STAPL programming file. The programming files can be AES-encrypted or plaintext. This allows maximum flexibility in providing security to the entire device. Refer to the "Programming Flash Devices" section on page 221 for information on the FlashROM structure.

Unlike SRAM-based FPGA devices, which require a separate boot PROM to store programming data, low power flash devices are nonvolatile, and the secured configuration data is stored in on-chip flash cells that are part of the FPGA fabric. Once programmed, this data is an inherent part of the FPGA array and does not need to be loaded at system power-up. SRAM-based FPGAs load the configuration bitstream upon power-up; therefore, the configuration is exposed and can be read easily.

The built-in FPGA core, FBs, and FlashROM support programming files encrypted with the 128-bit AES (FIPS-192) block ciphers. The AES key is stored in dedicated, on-chip flash memory and can be programmed before the device is shipped to other parties (allowing secure remote field updates).

## Security in ARM-Enabled Low Power Flash Devices

There are slight differences between the regular flash devices and the ARM®-enabled flash devices, which have the M1 and M7 prefix.

The AES key is used by Microsemi and preprogrammed into the device to protect the ARM IP. As a result, the design is encrypted along with the ARM IP, according to the details below.

### Cortex-M1 Device Security

Cortex-M1–enabled devices are shipped with the following security features:

- FPGA array enabled for AES-encrypted programming and verification
- FlashROM enabled for AES-encrypted Write and Verify
- Fusion Embedded Flash Memory enabled for AES-encrypted Write

## AES Encryption of Programming Files

Low power flash devices employ AES as part of the security mechanism that prevents invasive and noninvasive attacks. The mechanism entails encrypting the programming file with AES encryption and then passing the programming file through the AES decryption core, which is embedded in the device. The file is decrypted there, and the device is successfully programmed. The AES master key is stored in on-chip nonvolatile memory (flash). The AES master key can be preloaded into parts in a secure programming environment (such as the Microsemi In-House Programming center), and then "blank" parts can be shipped to an untrusted programming or manufacturing center for final personalization with an AES-encrypted bitstream. Late-stage product changes or personalization can be implemented easily and securely by simply sending a STAPL file with AES-encrypted data. Secure remote field updates over public networks (such as the Internet) are possible by sending and programming a STAPL file with AES-encrypted data.

The AES key protects the programming data for file transfer into the device with 128-bit AES encryption. If AES encryption is used, the AES key is stored or preprogrammed into the device. To program, you must use an AES-encrypted file, and the encryption used on the file must match the encryption key already in the device.

The AES key is protected by a FlashLock security Pass Key that is also implemented in each device. The AES key is always protected by the FlashLock Key, and the AES-encrypted file does NOT contain the FlashLock Key. This FlashLock Pass Key technology is exclusive to the Microsemi flash-based device families. FlashLock Pass Key technology can also be implemented without the AES encryption option, providing a choice of different security levels.

In essence, security features can be categorized into the following three options:

- AES encryption with FlashLock Pass Key protection
- FlashLock protection only (no AES encryption)
- No protection

Each of the above options is explained in more detail in the following sections with application examples and software implementation options.

### Advanced Encryption Standard

The 128-bit AES standard (FIPS-192) block cipher is the NIST (National Institute of Standards and Technology) replacement for DES (Data Encryption Standard FIPS46-2). AES has been designed to protect sensitive government information well into the 21st century. It replaces the aging DES, which NIST adopted in 1977 as a Federal Information Processing Standard used by federal agencies to protect sensitive, unclassified information. The 128-bit AES standard has $3.4 \times 10^{38}$ possible 128-bit key variants, and it has been estimated that it would take 1,000 trillion years to crack 128-bit AES cipher text using exhaustive techniques. Keys are stored (securely) in low power flash devices in nonvolatile flash memory. All programming files sent to the device can be authenticated by the part prior to programming to ensure that bad programming data is not loaded into the part that may possibly damage it. All programming verification is performed on-chip, ensuring that the contents of low power flash devices remain secure.

Microsemi has implemented the 128-bit AES (Rijndael) algorithm in low power flash devices. With this key size, there are approximately $3.4 \times 10^{38}$ possible 128-bit keys. DES has a 56-bit key size, which provides approximately $7.2 \times 10^{16}$ possible keys. In their AES fact sheet, the National Institute of Standards and Technology uses the following hypothetical example to illustrate the theoretical security provided by AES. If one were to assume that a computing system existed that could recover a DES key in a second, it would take that same machine approximately 149 trillion years to crack a 128-bit AES key. NIST continues to make their point by stating the universe is believed to be less than 20 billion years old.[1]

The AES key is securely stored on-chip in dedicated low power flash device flash memory and cannot be read out. In the first step, the AES key is generated and programmed into the device (for example, at a secure or trusted programming site). The Microsemi Designer software tool provides AES key generation capability. After the key has been programmed into the device, the device will only correctly decrypt programming files that have been encrypted with the same key. If the individual programming file content is incorrect, a Message Authentication Control (MAC) mechanism inside the device will fail in authenticating the programming file. In other words, when an encrypted programming file is being loaded into a device that has a different programmed AES key, the MAC will prevent this incorrect data from being loaded, preventing possible device damage. See Figure 11-3 on page 238 and Figure 11-4 on page 240 for graphical representations of this process.

It is important to note that the user decides what level of protection will be implemented for the device. When AES protection is desired, the FlashLock Pass Key must be set. The AES key is a content protection mechanism, whereas the FlashLock Pass Key is a device protection mechanism. When the AES key is programmed into the device, the device still needs the Pass Key to protect the FPGA and FlashROM contents and the security settings, including the AES key. Using the FlashLock Pass Key prevents modification of the design contents by means of simply programming the device with a different AES key.

## AES Decryption and MAC Authentication

Low power flash devices have a built-in 128-bit AES decryption core, which decrypts the encrypted programming file and performs a MAC check that authenticates the file prior to programming.

MAC authenticates the entire programming data stream. After AES decryption, the MAC checks the data to make sure it is valid programming data for the device. This can be done while the device is still operating. If the MAC validates the file, the device will be erased and programmed. If the MAC fails to validate, then the device will continue to operate uninterrupted.

This will ensure the following:

- Correct decryption of the encrypted programming file
- Prevention of erroneous or corrupted data being programmed during the programming file transfer
- Correct bitstream passed to the device for decryption

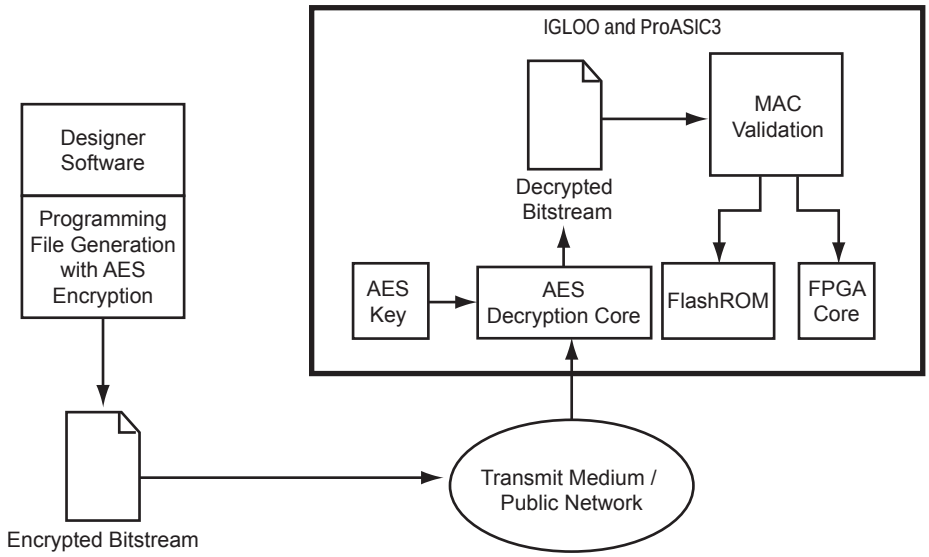


***Figure 11-4*** **• Example Application Scenario Using AES in IGLOO and ProASIC3 Devices**

1. *National Institute of Standards and Technology, "ADVANCED ENCRYPTION STANDARD (AES) Questions and Answers," 28 January 2002 (10 January 2005). See http://csrc.nist.gov/archive/aes/index1.html for more information.*

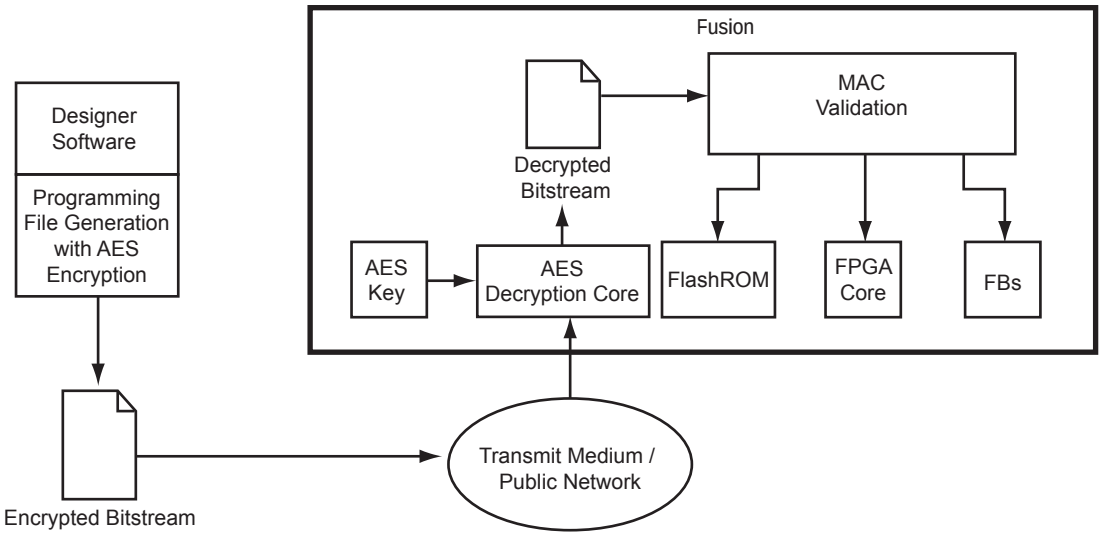


***Figure 11-5*** **• Example Application Scenario Using AES in Fusion Devices**

## FlashLock

### Additional Options for IGLOO and ProASIC3 Devices

The user also has the option of prohibiting Write operations to the FPGA array but allowing Verify operations on the FPGA array and/or Read operations on the FlashROM without the use of the FlashLock Pass Key. This option provides the user the freedom of verifying the FPGA array and/or reading the FlashROM contents after the device is programmed, without having to provide the FlashLock Pass Key. The user can incorporate AES encryption on the programming files to better enhance the level of security used.

## Permanent Security Setting Options

In applications where a permanent lock is not desired, yet the security settings should not be modifiable, IGLOO and ProASIC3 devices can accommodate this requirement.

This application is particularly useful in cases where a device is located at a remote location and must be reprogrammed with a design or data update. Refer to the "Application 3: Nontrusted Environment—Field Updates/Upgrades" section on page 244 for further discussion and examples of how this can be achieved.

The user must be careful when considering the Permanent FlashLock or Permanent Security Settings option. Once the design is programmed with the permanent settings, it is not possible to reconfigure the security settings already employed on the device. Therefore, exercise careful consideration before programming permanent settings.

### *Permanent FlashLock*

The purpose of the permanent lock feature is to provide the benefits of the highest level of security to IGLOO and ProASIC3 devices. If selected, the permanent FlashLock feature will create a permanent barrier, preventing any access to the contents of the device. This is achieved by permanently disabling Write and Verify access to the array, and Write and Read access to the FlashROM. After permanently locking the device, it has been effectively rendered one-time-programmable. This feature is useful if the intended applications do not require design or system updates to the device.

# Security in Action

This section illustrates some applications of the security advantages of Microsemi's devices (Figure 11-6).

.

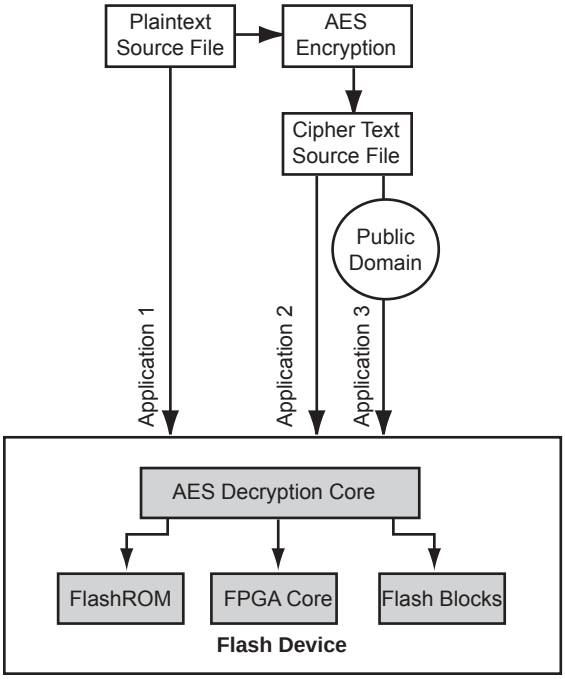


*Note: Flash blocks are only used in Fusion devices*

***Figure 11-6* • Security Options**

## Application 1: Trusted Environment

As illustrated in Figure 11-7, this application allows the programming of devices at design locations where research and development take place. Therefore, encryption is not necessary and is optional to the user. This is often a secure way to protect the design, since the design program files are not sent elsewhere. In situations where production programming is not available at the design location, programming centers (such as Microsemi In-House Programming) provide a way of programming designs at an alternative, secure, and trusted location. In this scenario, the user generates a STAPL programming file from the Designer software in plaintext format, containing information on the entire design or the portion of the design to be programmed. The user can choose to employ the FlashLock Pass Key feature with the design. Once the design is programmed to unprogrammed devices, the design is protected by this FlashLock Pass Key. If no future programming is needed, the user can consider permanently securing the IGLOO and ProASIC3 device, as discussed in the "Permanent FlashLock" section on page 241.

## Application 2: Nontrusted Environment—Unsecured Location

Often, programming of devices is not performed in the same location as actual design implementation, to reduce manufacturing cost. Overseas programming centers and contract manufacturers are examples of this scenario.

To achieve security in this case, the AES key and the FlashLock Pass Key can be initially programmed in-house (trusted environment). This is done by generating a programming file with only the security settings and no design contents. The design FPGA core, FlashROM, and (for Fusion) FB contents are generated in a separate programming file. This programming file must be set with the same AES key that was used to program to the device previously so the device will correctly decrypt this encrypted programming file. As a result, the encrypted design content programming file can be safely sent off-site to nontrusted programming locations for design programming. Figure 11-7 shows a more detailed flow for this application.

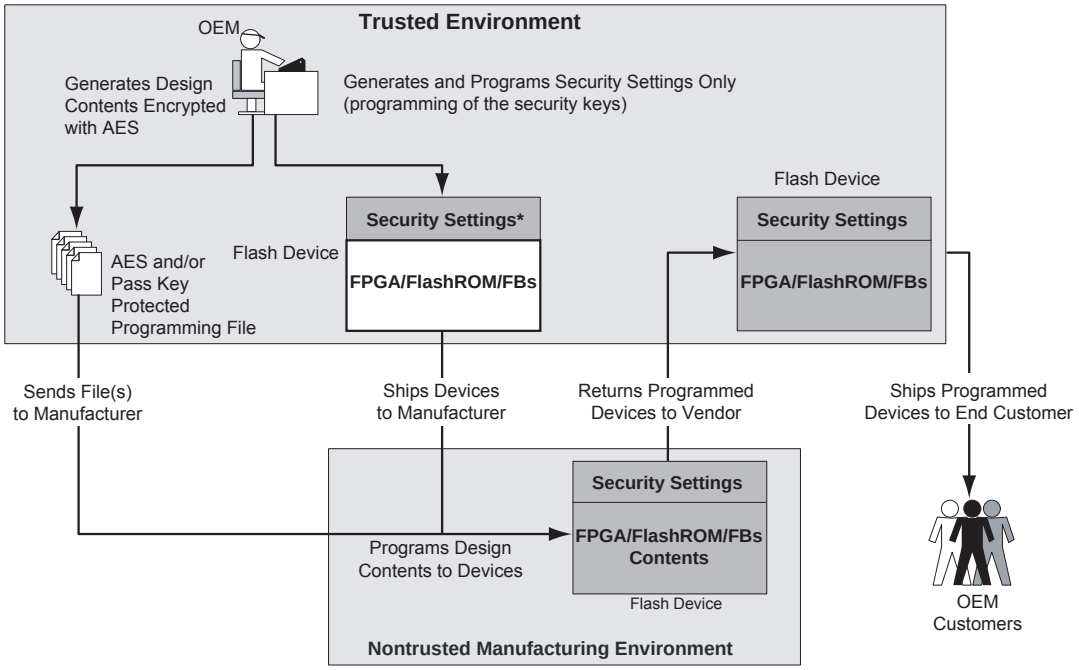


*Notes:*

1. *Programmed portion indicated with dark gray.*
2. *Programming of FBs applies to Fusion only.*

***Figure 11-7*** **• Application 2: Device Programming in a Nontrusted Environment**

## Application 3: Nontrusted Environment—Field Updates/Upgrades

Programming or reprogramming of devices may occur at remote locations. Reconfiguration of devices in consumer products/equipment through public networks is one example. Typically, the remote system is already programmed with particular design contents. When design update (FPGA array contents update) and/or data upgrade (FlashROM and/or FB contents upgrade) is necessary, an updated programming file with AES encryption can be generated, sent across public networks, and transmitted to the remote system. Reprogramming can then be done using this AES-encrypted programming file, providing easy and secure field upgrades. Low power flash devices support this secure ISP using AES. The detailed flow for this application is shown in Figure 11-8. Refer to the "Microprocessor Programming of Microsemi's Low Power Flash Devices" chapter of an appropriate FPGA fabric user's guide for more information.

To prepare devices for this scenario, the user can initially generate a programming file with the available security setting options. This programming file is programmed into the devices before shipment. During the programming file generation step, the user has the option of making the security settings permanent or not. In situations where no changes to the security settings are necessary, the user can select this feature in the software to generate the programming file with permanent security settings. Microsemi recommends that the programming file use encryption with an AES key, especially when ISP is done via public domain.

For example, if the designer wants to use an AES key for the FPGA array and the FlashROM, **Permanent** needs to be chosen for this setting. At first, the user chooses the options to use an AES key for the FPGA array and the FlashROM, and then chooses **Permanently lock the security settings**. A unique AES key is chosen. Once this programming file is generated and programmed to the devices, the AES key is permanently stored in the on-chip memory, where it is secured safely. The devices are sent to distant locations for the intended application. When an update is needed, a new programming file must be generated. The programming file must use the same AES key for encryption; otherwise, the authentication will fail and the file will not be programmed in the device.

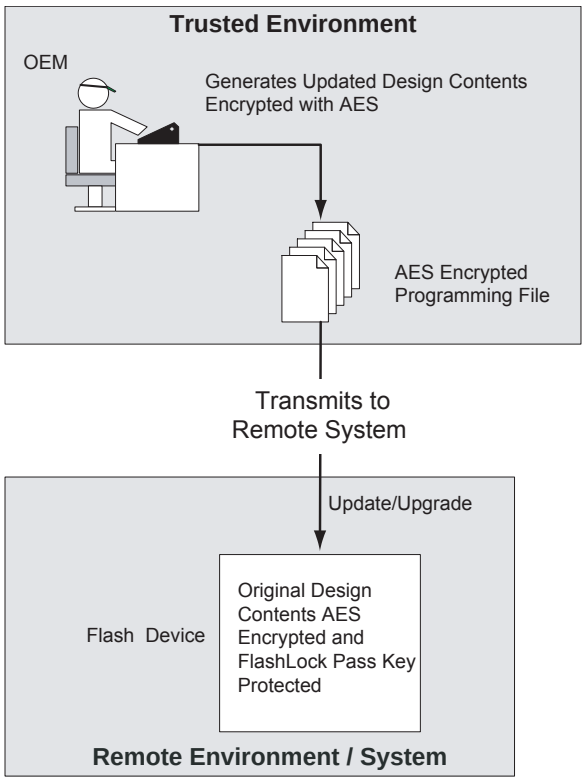


***Figure 11-8*** **• Application 3: Nontrusted Environment—Field Updates/Upgrades**

# FlashROM Security Use Models

Each of the subsequent sections describes in detail the available selections in Microsemi Designer as an aid to understanding security applications and generating appropriate programming files for those applications. Before proceeding, it is helpful to review Figure 11-7 on page 243, which gives a general overview of the programming file generation flow within the Designer software as well as what occurs during the device programming stage. Specific settings are discussed in the following sections.

In Figure 11-7 on page 243, the flow consists of two sub-flows. Sub-flow 1 describes programming security settings to the device only, and sub-flow 2 describes programming the design contents only.

In Application 1, described in the "Application 1: Trusted Environment" section on page 243, the user does not need to generate separate files but can generate one programming file containing both security settings and design contents. Then programming of the security settings and design contents is done in one step. Both sub-flow 1 and sub-flow 2 are used.

In Application 2, described in the "Application 2: Nontrusted Environment—Unsecured Location" section on page 243, the trusted site should follow sub-flows 1 and 2 separately to generate two separate programming files. The programming file from sub-flow 1 will be used at the trusted site to program the device(s) first. The programming file from sub-flow 2 will be sent off-site for production programming.

In Application 3, described in the "Application 3: Nontrusted Environment—Field Updates/Upgrades" section on page 244, typically only sub-flow 2 will be used, because only updates to the design content portion are needed and no security settings need to be changed.

In the event that update of the security settings is necessary, see the "Reprogramming Devices" section on page 255 for details. For more information on programming low power flash devices, refer to the "In-System Programming (ISP) of Microsemi's Low Power Flash Devices Using FlashPro4/3/3X" section on page 261.

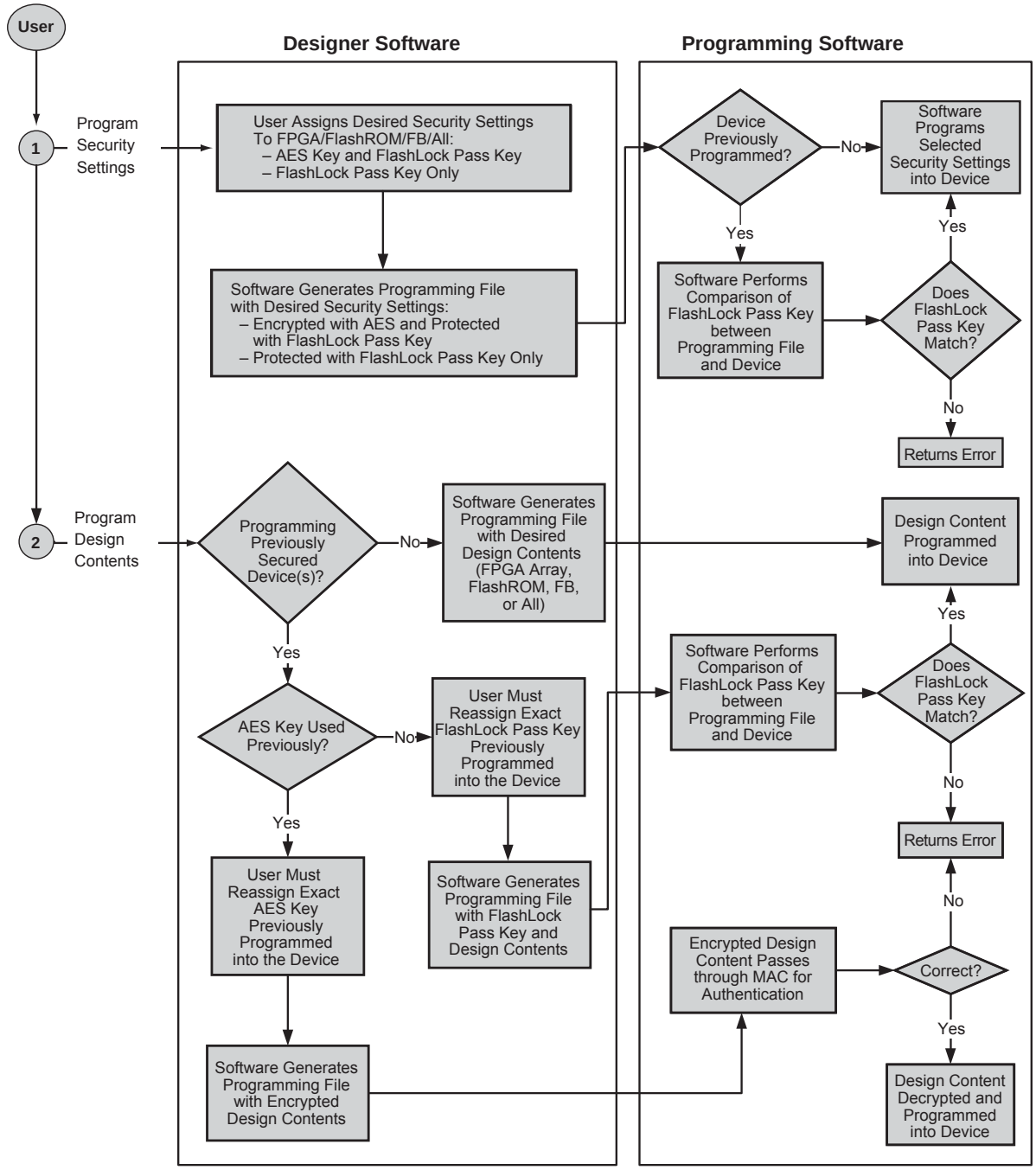


*Note: If programming the Security Header only, just perform sub-flow 1.*
*If programming design content only, just perform sub-flow 2.*

***Figure 11-9* • Security Programming Flows**

# Generating Programming Files

## Generation of the Programming File in a Trusted Environment—Application 1

As discussed in the "Application 1: Trusted Environment" section on page 243, in a trusted environment, the user can choose to program the device with plaintext bitstream content. It is possible to use plaintext for programming even when the FlashLock Pass Key option has been selected. In this application, it is not necessary to employ AES encryption protection. For AES encryption settings, refer to the next sections.

The generated programming file will include the security setting (if selected) and the plaintext programming file content for the FPGA array, FlashROM, and/or FBs. These options are indicated in Table 11-2 and Table 11-3.

***Table 11-2* • IGLOO and ProASIC3 Plaintext Security Options, No AES**

| Security Protection | FlashROM Only | FPGA Core Only | Both FlashROM and FPGA |
|---|---|---|---|
| No AES / no FlashLock | ✓ | ✓ | ✓ |
| FlashLock only | ✓ | ✓ | ✓ |
| AES and FlashLock | – | – | – |

***Table 11-3* • Fusion Plaintext Security Options**

| Security Protection | FlashROM Only | FPGA Core Only | FB Core Only | All |
|---|---|---|---|---|
| No AES / no FlashLock | ✓ | ✓ | ✓ | ✓ |
| FlashLock | ✓ | ✓ | ✓ | ✓ |
| AES and FlashLock | – | – | – | – |

*Note: For all instructions, the programming of Flash Blocks refers to Fusion only.*

For this scenario, generate the programming file as follows:

1. Select the **Silicon features to be programmed** (Security Settings, FPGA Array, FlashROM, Flash Memory Blocks), as shown in Figure 11-10 on page 248 and Figure 11-11 on page 248. Click **Next**.

   If **Security Settings** is selected (i.e., the FlashLock security Pass Key feature), an additional dialog will be displayed to prompt you to select the security level setting. If no security setting is selected, you will be directed to Step 3.

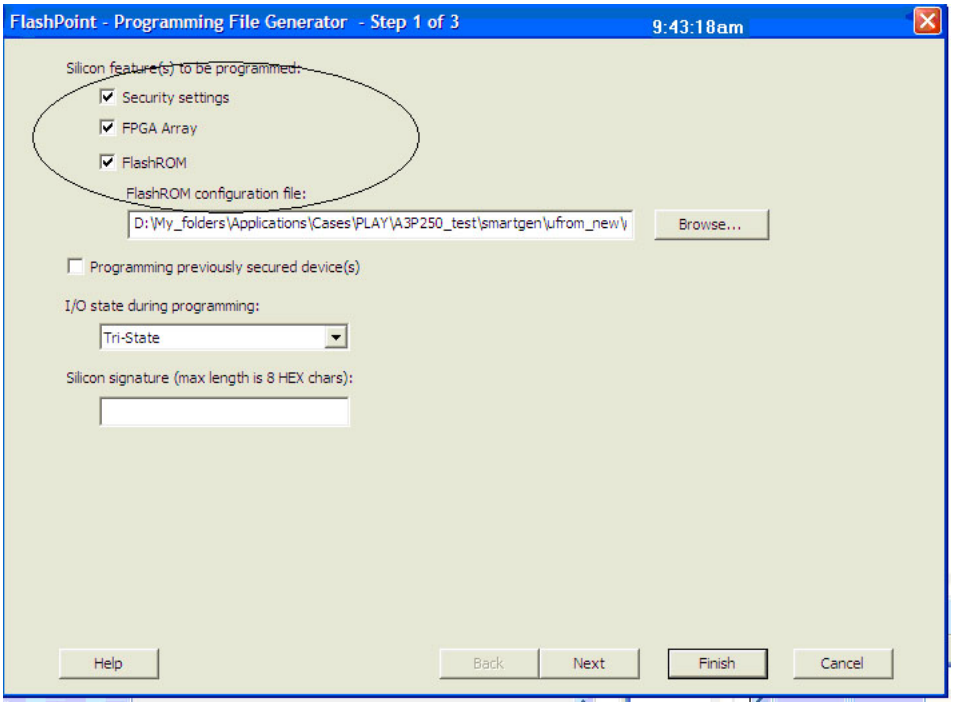


***Figure 11-10*** **• All Silicon Features Selected for IGLOO and ProASIC3 Devices**

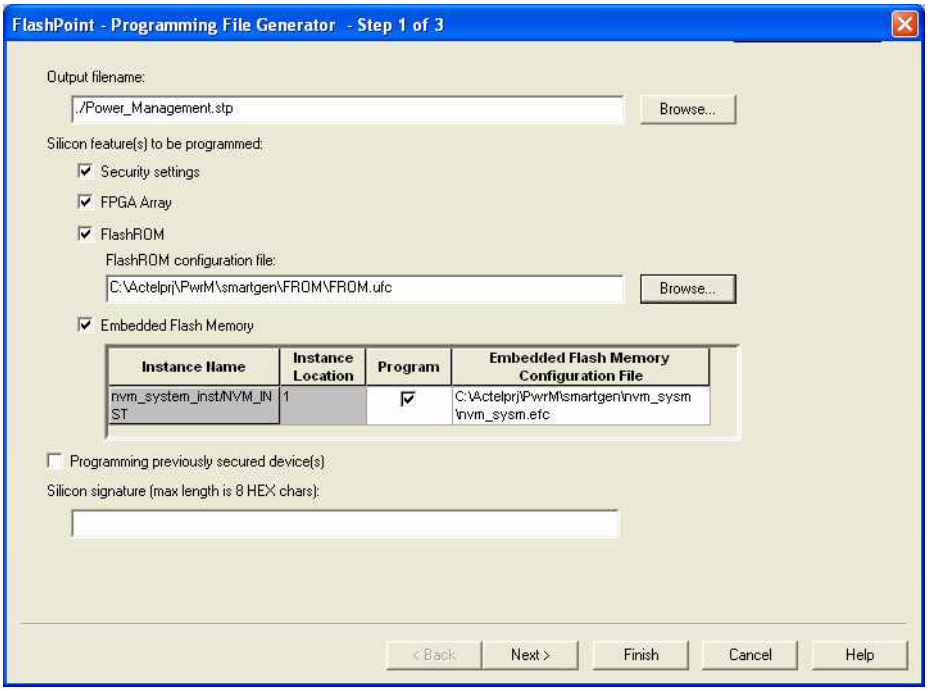


***Figure 11-11*** **• All Silicon Features Selected for Fusion**

2. Choose the appropriate security level setting and enter a FlashLock Pass Key. The default is the **Medium** security level (Figure 11-12). Click **Next**.

   If you want to select different options for the FPGA and/or FlashROM, this can be set by clicking **Custom Level**. Refer to the "Advanced Options" section on page 256 for different custom security level options and descriptions of each.

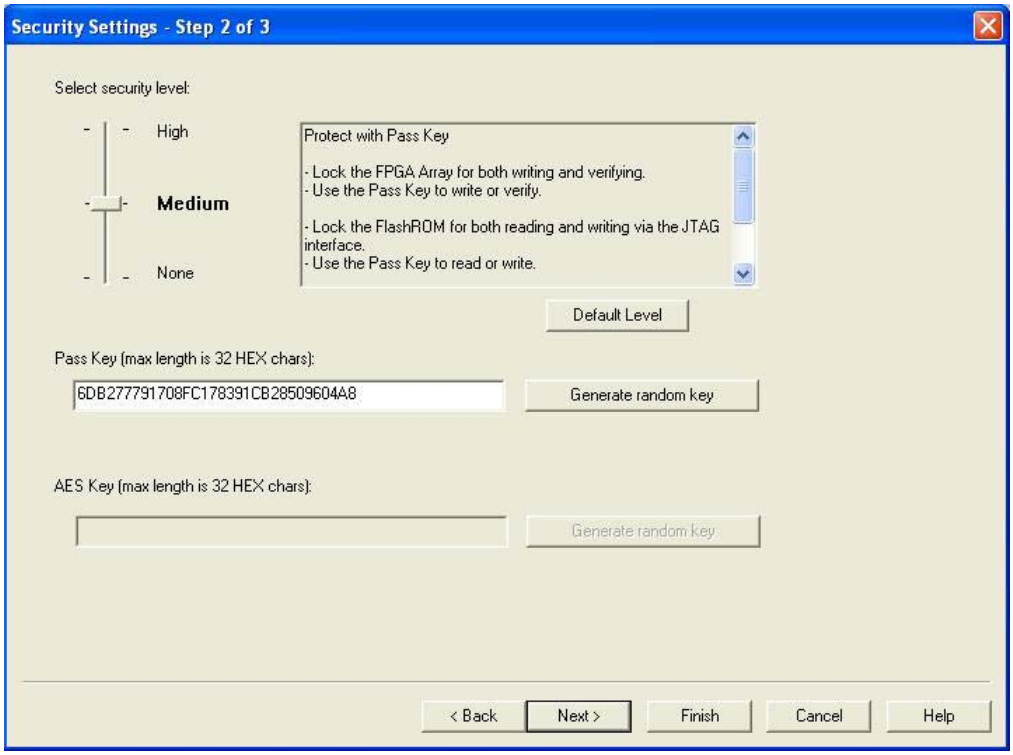


***Figure 11-12*** **• Medium Security Level Selected for Low Power Flash Devices**

3. Choose the desired settings for the FlashROM configurations to be programmed (Figure 11-13). Click **Finish** to generate the STAPL programming file for the design.

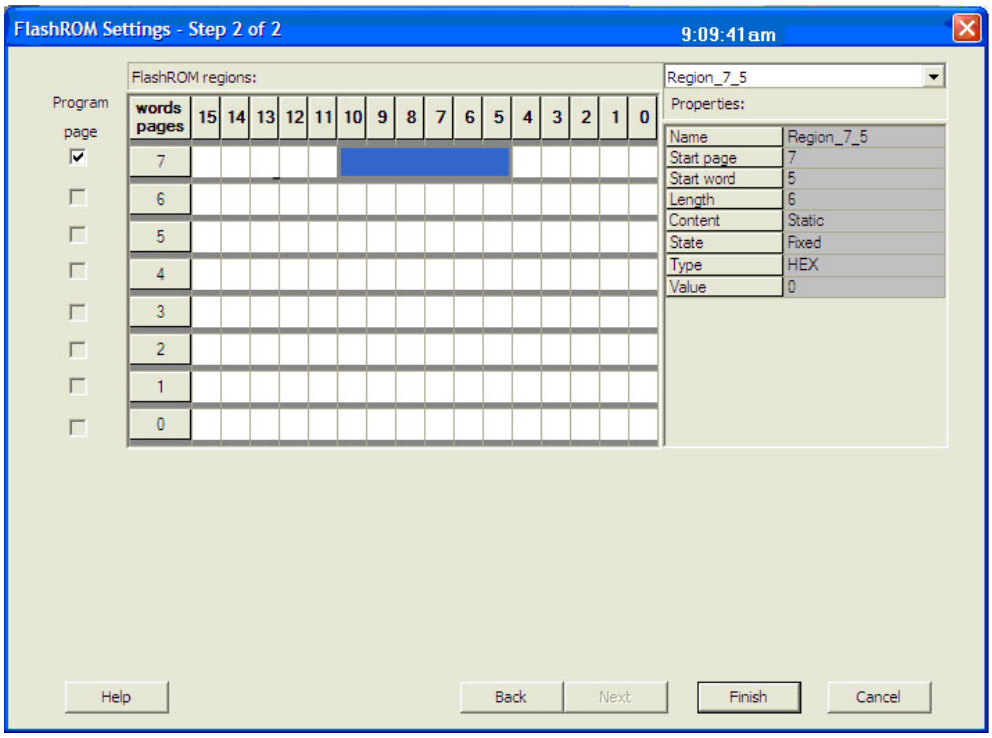


***Figure 11-13*** **• FlashROM Configuration Settings for Low Power Flash Devices**

## Generation of Security Header Programming File Only—Application 2

As mentioned in the "Application 2: Nontrusted Environment—Unsecured Location" section on page 243, the designer may employ FlashLock Pass Key protection or FlashLock Pass Key with AES encryption on the device before sending it to a nontrusted or unsecured location for device programming. To achieve this, the user needs to generate a programming file containing only the security settings desired (Security Header programming file).

Note: If AES encryption is configured, FlashLock Pass Key protection must also be configured.

The available security options are indicated in Table 11-4 and Table 11-5 on page 251.

***Table 11-4*** **• FlashLock Security Options for IGLOO and ProASIC3**

| Security Option | FlashROM Only | FPGA Core Only | Both FlashROM and FPGA |
|---|---|---|---|
| No AES / no FlashLock | – | – | – |
| FlashLock only | ✓ | ✓ | ✓ |
| AES and FlashLock | ✓ | ✓ | ✓ |

***Table 11-5* • FlashLock Security Options for Fusion**

| Security Option | FlashROM Only | FPGA Core Only | FB Core Only | All |
|---|---|---|---|---|
| No AES / no FlashLock | – | – | – | – |
| FlashLock | ✓ | ✓ | ✓ | ✓ |
| AES and FlashLock | ✓ | ✓ | ✓ | ✓ |

For this scenario, generate the programming file as follows:

1. Select only the **Security settings** option, as indicated in Figure 11-14 and Figure 11-15 on page 252. Click **Next**.

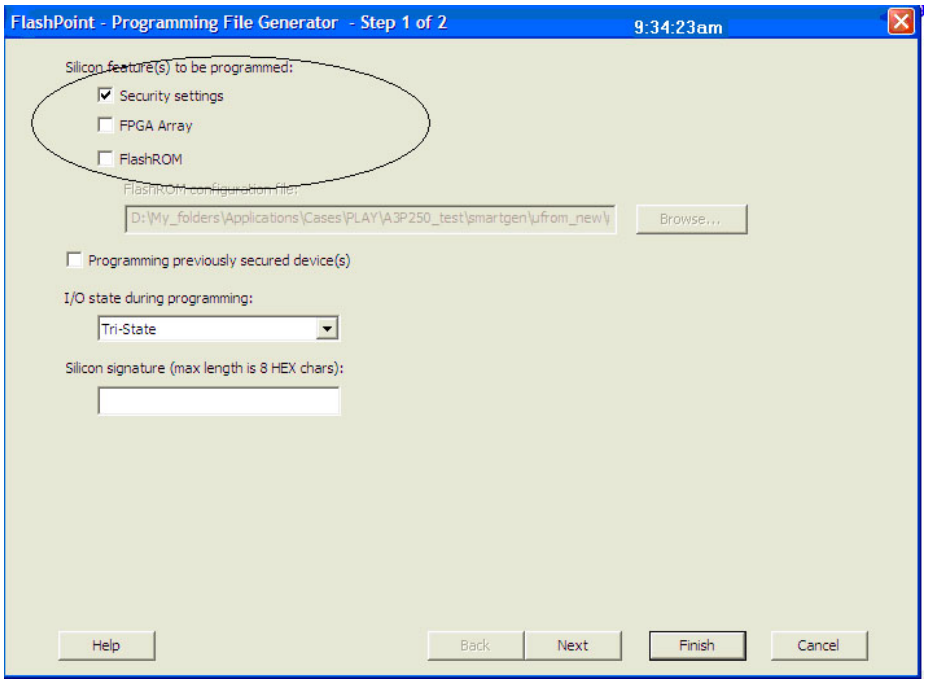


***Figure 11-14* • Programming IGLOO and ProASIC3 Security Settings Only**

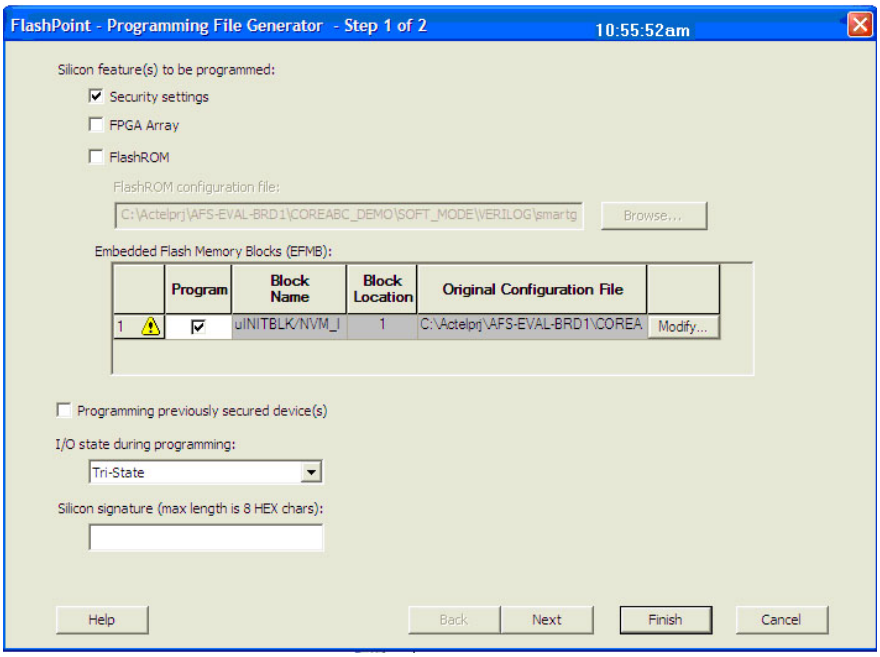


***Figure 11-15*** **• Programming Fusion Security Settings Only**

2. Choose the desired security level setting and enter the key(s).
   – The **High** security level employs FlashLock Pass Key with AES Key protection.
   – The **Medium** security level employs FlashLock Pass Key protection only.

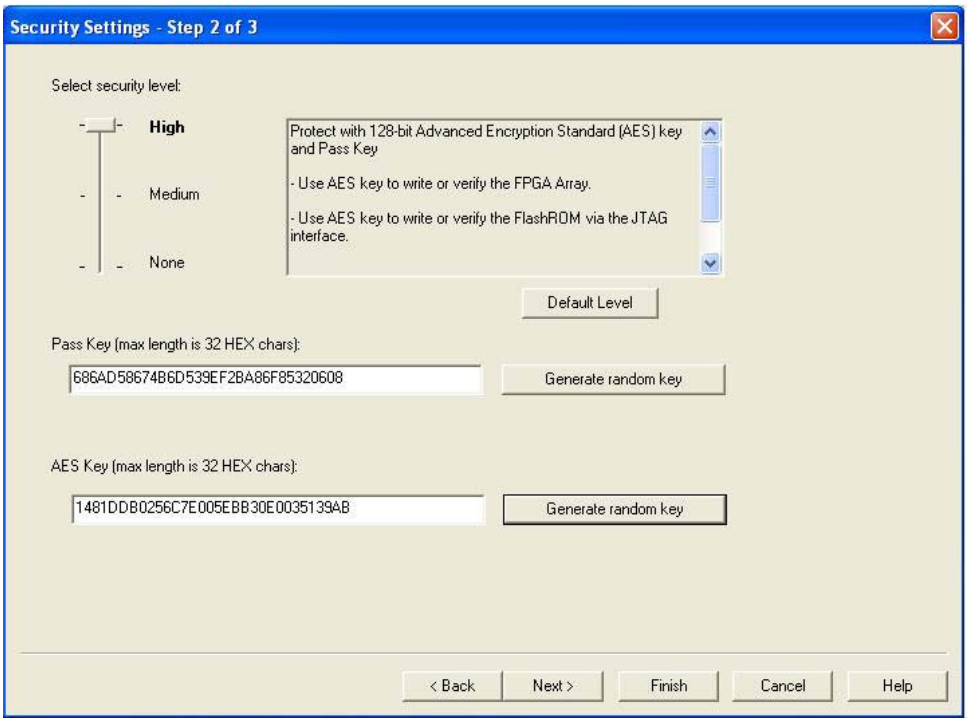


***Figure 11-16*** **• High Security Level to Implement FlashLock Pass Key and AES Key Protection**

Table 11-6 and Table 11-7 show all available options. If you want to implement custom levels, refer to the "Advanced Options" section on page 256 for information on each option and how to set it.

3. When done, click **Finish** to generate the Security Header programming file.

***Table 11-6* • All IGLOO and ProASIC3 Header File Security Options**

| Security Option | FlashROM Only | FPGA Core Only | Both FlashROM and FPGA |
|---|---|---|---|
| No AES / no FlashLock | ✓ | ✓ | ✓ |
| FlashLock only | ✓ | ✓ | ✓ |
| AES and FlashLock | ✓ | ✓ | ✓ |

*Note: ✓ = options that may be used*

***Table 11-7* • All Fusion Header File Security Options**

| Security Option | FlashROM Only | FPGA Core Only | FB Core Only | All |
|---|---|---|---|---|
| No AES / No FlashLock | ✓ | ✓ | ✓ | ✓ |
| FlashLock | ✓ | ✓ | ✓ | ✓ |
| AES and FlashLock | ✓ | ✓ | ✓ | ✓ |

## Generation of Programming Files with AES Encryption—Application 3

This section discusses how to generate design content programming files needed specifically at unsecured or remote locations to program devices with a Security Header (FlashLock Pass Key and AES key) already programmed ("Application 2: Nontrusted Environment—Unsecured Location" section on page 243 and "Application 3: Nontrusted Environment—Field Updates/Upgrades" section on page 244). In this case, the encrypted programming file must correspond to the AES key already programmed into the device. If AES encryption was previously selected to encrypt the FlashROM, FBs, and FPGA array, AES encryption must be set when generating the programming file for them. AES encryption can be applied to the FlashROM only, the FBs only, the FPGA array only, or all. The user must ensure both the FlashLock Pass Key and the AES key match those already programmed to the device(s), and all security settings must match what was previously programmed. Otherwise, the encryption and/or device unlocking will not be recognized when attempting to program the device with the programming file.

The generated programming file will be AES-encrypted.

In this scenario, generate the programming file as follows:

1. Deselect **Security settings** and select the portion of the device to be programmed (Figure 11-17 on page 254). Select **Programming previously secured device(s**). Click **Next**.

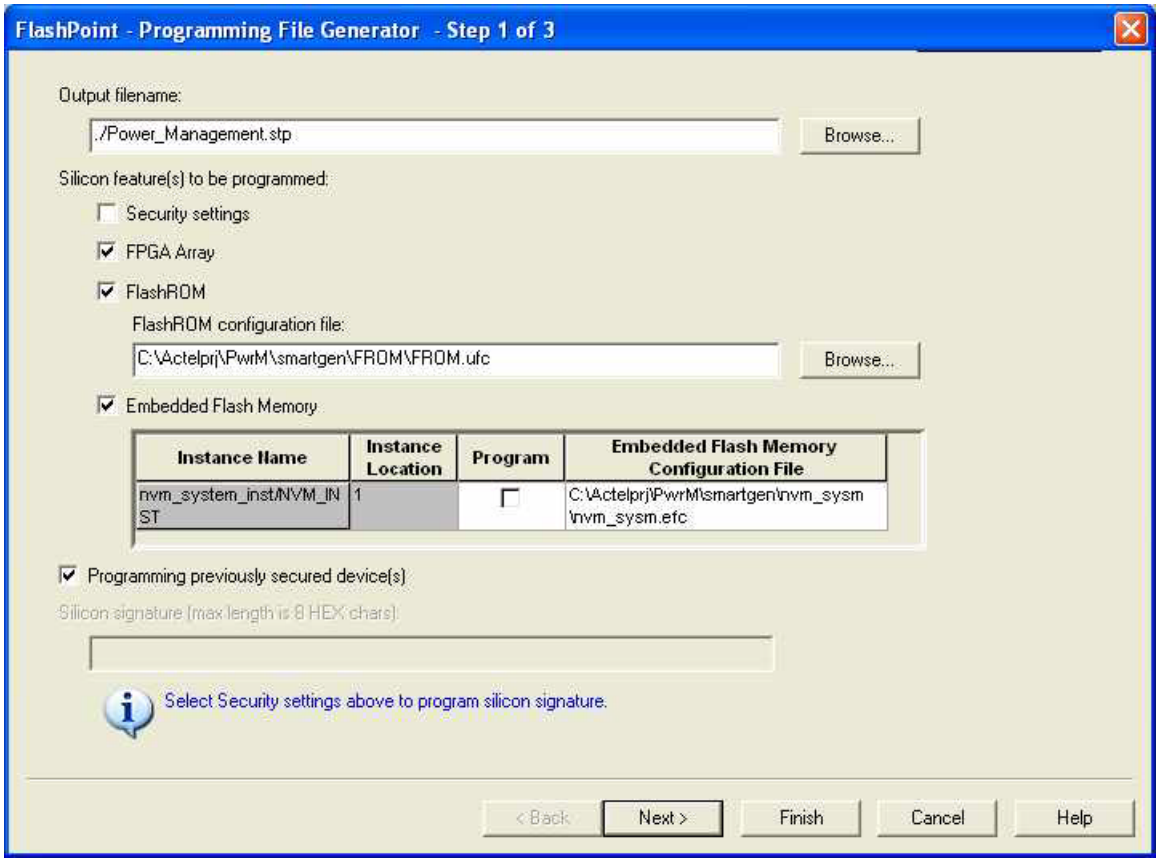


*Note: The settings in this figure are used to show the generation of an AES-encrypted programming file for the FPGA array, FlashROM, and FB contents. One or all locations may be selected for encryption.*

***Figure 11-17* • Settings to Program a Device Secured with FlashLock and using AES Encryption**

Choose the **High** security level to reprogram devices using both the FlashLock Pass Key and AES key protection (Figure 11-18 on page 255). Enter the AES key and click **Next**.

A device that has already been secured with FlashLock and has an AES key loaded must recognize the AES key to program the device and generate a valid bitstream in authentication. The FlashLock Key is only required to unlock the device and change the security settings.

This is what makes it possible to program in an untrusted environment. The AES key is protected inside the device by the FlashLock Key, so you can only program if you have the correct AES key. In fact, the AES key is not in the programming file either. It is the key used to encrypt the data in the file. The same key previously programmed with the FlashLock Key matches to decrypt the file.

An AES-encrypted file programmed to a device without FlashLock would not be secure, since without FlashLock to protect the AES key, someone could simply reprogram the AES key first, then program with any AES key desired or no AES key at all. This option is therefore not available in the software.

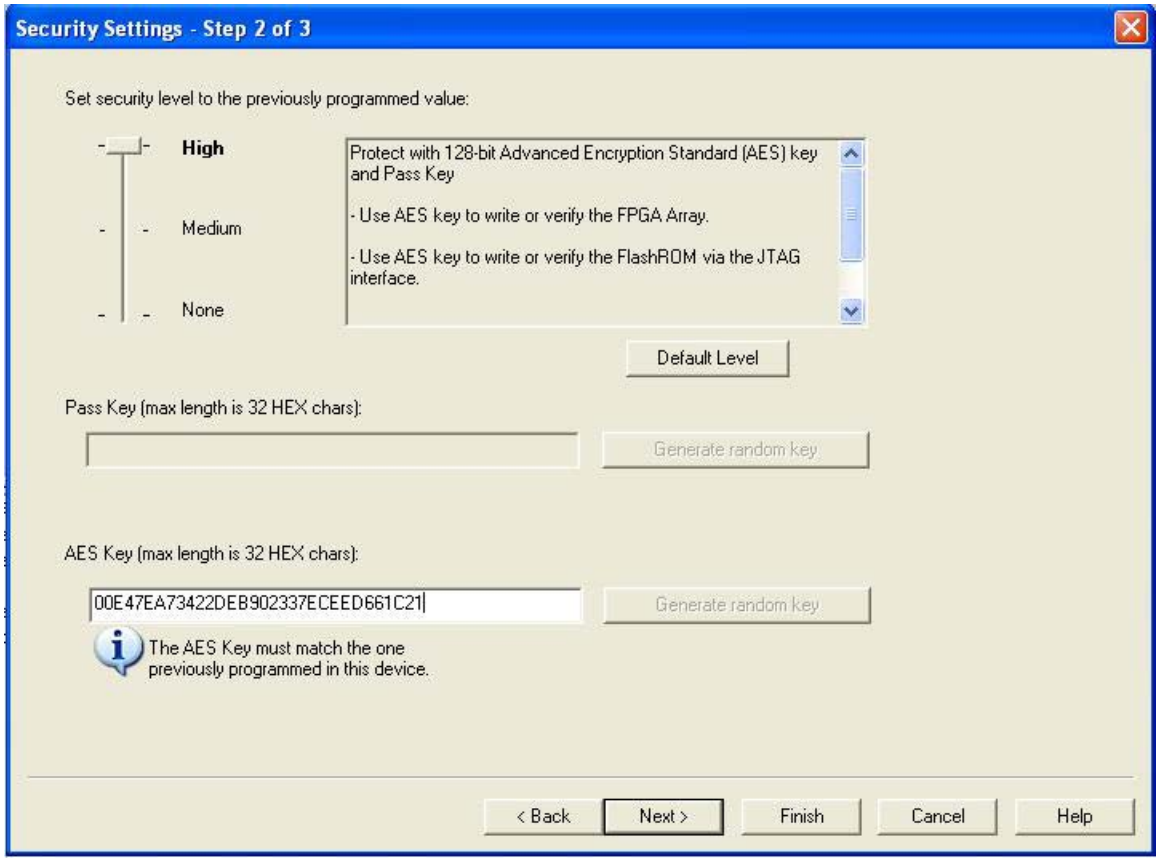


***Figure 11-18* • Security Level Set High to Reprogram Device with AES Key**

Programming with this file is intended for an unsecured environment. The AES key encrypts the programming file with the same AES key already used in the device and utilizes it to program the device.

## Reprogramming Devices

Previously programmed devices can be reprogrammed using the steps in the "Generation of the Programming File in a Trusted Environment—Application 1" section on page 247 and "Generation of Security Header Programming File Only—Application 2" section on page 250. In the case where a FlashLock Pass Key has been programmed previously, the user must generate the new programming file with a FlashLock Pass Key that matches the one previously programmed into the device. The software will check the FlashLock Pass Key in the programming file against the FlashLock Pass Key in the device. The keys must match before the device can be unlocked to perform further programming with the new programming file.

Figure 11-10 on page 248 and Figure 11-11 on page 248 show the option **Programming previously secured device(s)**, which the user should select before proceeding. Upon going to the next step, the user will be notified that the same FlashLock Pass Key needs to be entered, as shown in Figure 11-19 on page 256.

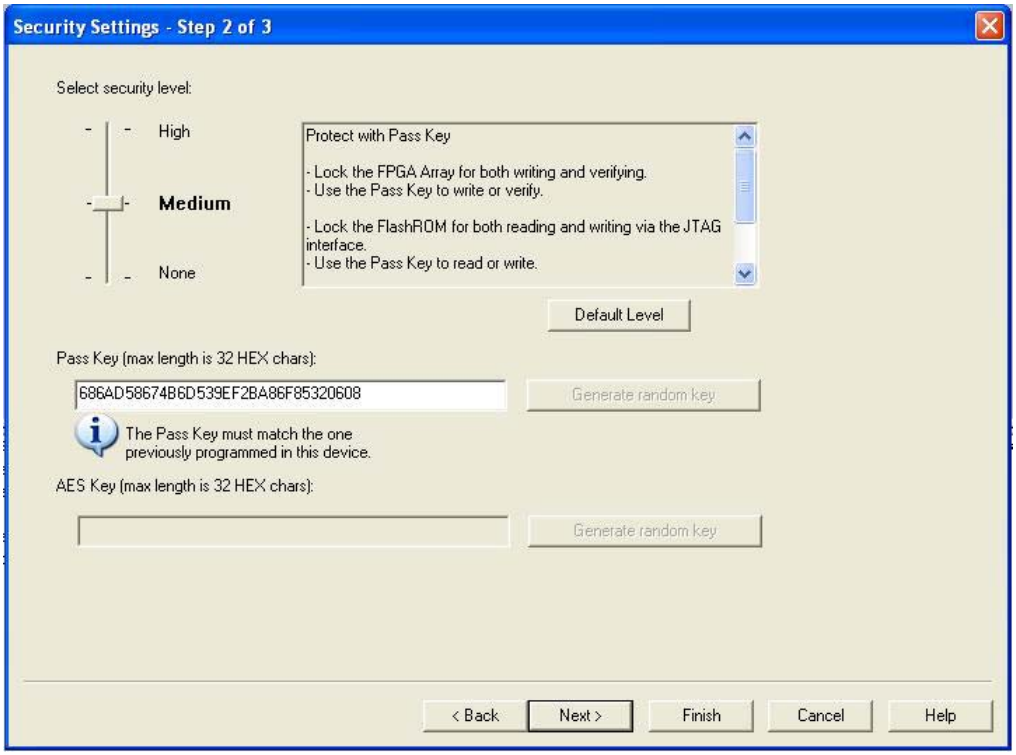


***Figure 11-19* • FlashLock Pass Key, Previously Programmed Devices**

It is important to note that when the security settings need to be updated, the user also needs to select the **Security settings** check box in Step 1, as shown in Figure 11-10 on page 248 and Figure 11-11 on page 248, to modify the security settings. The user must consider the following:

- If only a new AES key is necessary, the user must re-enter the same Pass Key previously programmed into the device in Designer and then generate a programming file with the same Pass Key and a different AES key. This ensures the programming file can be used to access and program the device and the new AES key.
- If a new Pass Key is necessary, the user can generate a new programming file with a new Pass Key (with the same or a new AES key if desired). However, for programming, the user must first load the original programming file with the Pass Key that was previously used to unlock the device. Then the new programming file can be used to program the new security settings.

## Advanced Options

As mentioned, there may be applications where more complicated security settings are required. The “Custom Security Levels” section in the *FlashPro User's Guide* describes different advanced options available to aid the user in obtaining the best available security settings.

## Programming File Header Definition

In each STAPL programming file generated, there will be information about how the AES key and FlashLock Pass Key are configured. Table 11-8 shows the header definitions in STAPL programming files for different security levels.

***Table 11-8* • STAPL Programming File Header Definitions by Security Level**

| Security Level | STAPL File Header Definition |
|---|---|
| No security (no FlashLock Pass Key or AES key) | `NOTE "SECURITY" "Disable";` |
| FlashLock Pass Key with no AES key | `NOTE "SECURITY" "KEYED ";` |
| FlashLock Pass Key with AES key | `NOTE "SECURITY" "KEYED ENCRYPT ";` |
| Permanent Security Settings option enabled | `NOTE "SECURITY" "PERMLOCK ENCRYPT ";` |
| AES-encrypted FPGA array (for programming updates) | `NOTE "SECURITY" "ENCRYPT CORE ";` |
| AES-encrypted FlashROM (for programming updates) | `NOTE "SECURITY" "ENCRYPT FROM ";` |
| AES-encrypted FPGA array and FlashROM (for programming updates) | `NOTE "SECURITY" "ENCRYPT FROM CORE ";` |

### *Example File Headers*

#### STAPL Files Generated with FlashLock Key and AES Key Containing Key Information

- FlashLock Key / AES key indicated in STAPL file header definition
- Intended ONLY for secured/trusted environment programming applications

```
=============================================
NOTE "CREATOR" "Designer Version: 6.1.1.108";
NOTE "DEVICE" "A3PE600";
NOTE "PACKAGE" "208 PQFP";
NOTE "DATE" "2005/04/08";
NOTE "STAPL_VERSION" "JESD71";
NOTE "IDCODE" "$123261CF";
NOTE "DESIGN" "counter32";
NOTE "CHECKSUM" "$EDB9";
NOTE "SAVE_DATA" "FRomStream";
NOTE "SECURITY" "KEYED ENCRYPT ";
NOTE "ALG_VERSION" "1";
NOTE "MAX_FREQ" "20000000";
NOTE "SILSIG" "$00000000";
NOTE "PASS_KEY" "$00123456789012345678901234567890";
NOTE "AES_KEY" "$ABCDEFABCDEFABCDEFABCDEFABCDEFAB";
=============================================
```

### STAPL File with AES Encryption

- Does not contain AES key / FlashLock Key information
- Intended for transmission through web or service to unsecured locations for programming

```
=============================================
NOTE "CREATOR" "Designer Version: 6.1.1.108";
NOTE "DEVICE" "A3PE600";
NOTE "PACKAGE" "208 PQFP";
NOTE "DATE" "2005/04/08";
NOTE "STAPL_VERSION" "JESD71";
NOTE "IDCODE" "$123261CF";
NOTE "DESIGN" "counter32";
NOTE "CHECKSUM" "$EF57";
NOTE "SAVE_DATA" "FRomStream";
NOTE "SECURITY" "ENCRYPT FROM CORE ";
NOTE "ALG_VERSION" "1";
NOTE "MAX_FREQ" "20000000";
NOTE "SILSIG" "$00000000";
```

# Conclusion

The new and enhanced security features offered in Fusion, IGLOO, and ProASIC3 devices provide state-of-the-art security to designs programmed into these flash-based devices. Microsemi low power flash devices employ the encryption standard used by NIST and the U.S. government—AES using the 128-bit Rijndael algorithm.

The combination of an on-chip AES decryption engine and FlashLock technology provides the highest level of security against invasive attacks and design theft, implementing the most robust and secure ISP solution. These security features protect IP within the FPGA and protect the system from cloning, wholesale “black box” copying of a design, invasive attacks, and explicit IP or data theft.

# Glossary

| Term | Explanation |
|---|---|
| Security Header programming file | Programming file used to program the FlashLock Pass Key and/or AES key into the device to secure the FPGA, FlashROM, and/or FBs. |
| AES (encryption) key | 128-bit key defined by the user when the AES encryption option is set in the Microsemi Designer software when generating the programming file. |
| FlashLock Pass Key | 128-bit key defined by the user when the FlashLock option is set in the Microsemi Designer software when generating the programming file.<br>The FlashLock Key protects the security settings programmed to the device. Once a device is programmed with FlashLock, whatever settings were chosen at that time are secure. |
| FlashLock | The combined security features that protect the device content from attacks. These features are the following:<br>• Flash technology that does not require an external bitstream to program the device<br>• FlashLock Pass Key that secures device content by locking the security settings and preventing access to the device as defined by the user<br>• AES key that allows secure, encrypted device reprogrammability |

# References

National Institute of Standards and Technology. “ADVANCED ENCRYPTION STANDARD (AES) Questions and Answers.” 28 January 2002 (10 January 2005).
See http://csrc.nist.gov/archive/aes/index1.html for more information.

# Related Documents

## User's Guides

*FlashPro User's Guide*

http://www.microsemi.com/soc/documents/flashpro_ug.pdf

# List of Changes

The following table lists critical changes that were made in each revision of the chapter.

| Date | Changes | Page |
|---|---|---|
| July 2010 | This chapter is no longer published separately with its own part number and version but is now part of several FPGA fabric user's guides. | N/A |
| v1.5<br>(August 2009) | The "CoreMP7 Device Security" section was removed from "Security in ARM-Enabled Low Power Flash Devices", since M7-enabled devices are no longer supported. | 238 |
| v1.4<br>(December 2008) | IGLOO nano and ProASIC3 nano devices were added to Table 11-1 • Flash-Based FPGAs. | 236 |
| v1.3<br>(October 2008) | The "Security Support in Flash-Based Devices" section was revised to include new families and make the information more concise. | 236 |
| v1.2<br>(June 2008) | The following changes were made to the family descriptions in Table 11-1 • Flash-Based FPGAs:<br>• ProASIC3L was updated to include 1.5 V.<br>• The number of PLLs for ProASIC3E was changed from five to six. | 236 |
| v1.1<br>(March 2008) | The chapter was updated to include the IGLOO PLUS family and information regarding 15 k gate devices. | N/A |
| | The "IGLOO Terminology" section and "ProASIC3 Terminology" section are new. | 236 |

# 12 – In-System Programming (ISP) of Microsemi's Low Power Flash Devices Using FlashPro4/3/3X

## Introduction

Microsemi's low power flash devices are all in-system programmable. This document describes the general requirements for programming a device and specific requirements for the FlashPro4/3/3X programmers[1].

IGLOO, ProASIC3, SmartFusion, and Fusion devices offer a low power, single-chip, live-at-power-up solution with the ASIC advantages of security and low unit cost through nonvolatile flash technology. Each device contains 1 kbit of on-chip, user-accessible, nonvolatile FlashROM. The FlashROM can be used in diverse system applications such as Internet Protocol (IP) addressing, user system preference storage, device serialization, or subscription-based business models. IGLOO, ProASIC3, SmartFusion, and Fusion devices offer the best in-system programming (ISP) solution, FlashLock® security features, and AES-decryption-based ISP.

## ISP Architecture

Low power flash devices support ISP via JTAG and require a single VPUMP voltage of 3.3 V during programming. In addition, programming via a microcontroller in a target system is also supported.

Refer to the "Microprocessor Programming of Microsemi's Low Power Flash Devices" chapter of an appropriate FPGA fabric user's guide.

Family-specific support:

- ProASIC3, ProASIC3E, SmartFusion, and Fusion devices support ISP.
- ProASIC3L devices operate using a 1.2 V core voltage; however, programming can be done only at 1.5 V. Voltage switching is required in-system to switch from a 1.2 V core to 1.5 V core for programming.
- IGLOO and IGLOOe V5 devices can be programmed in-system when the device is using a 1.5 V supply voltage to the FPGA core.
- IGLOO nano V2 devices can be programmed at 1.2 V core voltage (when using FlashPro4 only) or 1.5 V. IGLOO nano V5 devices are programmed with a VCC core voltage of 1.5 V. Voltage switching is required in-system to switch from a 1.2 V supply (VCC,VCCI, and VJTAG) to 1.5 V for programming. The exception is that V2 devices can be programmed at 1.2 V VCC with FlashPro4.

IGLOO devices cannot be programmed in-system when the device is in Flash*Freeze mode. The device should exit Flash*Freeze mode and be in normal operation for programming to start. Programming operations in IGLOO devices can be achieved when the device is in normal operating mode and a 1.5 V core voltage is used.

### JTAG 1532

IGLOO, ProASIC3, SmartFusion, and Fusion devices support the JTAG-based IEEE 1532 standard for ISP. To start JTAG operations, the IGLOO device must exit Flash*Freeze mode and be in normal operation before starting to send JTAG commands to the device. As part of this support, when a device is in an unprogrammed state, all user I/O pins are disabled. This is achieved by keeping the global IO_EN

1. *FlashPro4 replaced FlashPro3/3X in 2010 and is backward compatible with FlashPro3/3X as long as there is no connection to pin 4 on the JTAG header on the board. On FlashPro3/3X, there is no connection to pin 4 on the JTAG header; however, pin 4 is used for programming mode (Prog_Mode) on FlashPro4. When converting from FlashPro3/3X to FlashPro4, users should make sure that JTAG connectors on system boards do not have any connection to pin 4. FlashPro3X supports discrete TCK toggling that is needed to support non-JTAG compliant devices in the chain. This feature is included in FlashPro4.*

signal deactivated, which also has the effect of disabling the input buffers. The SAMPLE/PRELOAD instruction captures the status of pads in parallel and shifts them out as new data is shifted in for loading into the Boundary Scan Register (BSR). When the device is in an unprogrammed state, the OE and output BSR will be undefined; however, the input BSR will be defined as long as it is connected and being used. For JTAG timing information on setup, hold, and fall times, refer to the *FlashPro User's Guide*.

# ISP Support in Flash-Based Devices

The flash FPGAs listed in Table 12-1 support the ISP feature and the functions described in this document.

***Table 12-1* • Flash-Based FPGAs Supporting ISP**

| Series | Family* | Description |
|---|---|---|
| IGLOO | IGLOO | Ultra-low power 1.2 V to 1.5 V FPGAs with Flash*Freeze technology |
| | IGLOOe | Higher density IGLOO FPGAs with six PLLs and additional I/O standards |
| | IGLOO nano | The industry's lowest-power, smallest-size solution |
| | IGLOO PLUS | IGLOO FPGAs with enhanced I/O capabilities |
| ProASIC3 | ProASIC3 | Low power, high-performance 1.5 V FPGAs |
| | ProASIC3E | Higher density ProASIC3 FPGAs with six PLLs and additional I/O standards |
| | ProASIC3 nano | Lowest-cost solution with enhanced I/O capabilities |
| | ProASIC3L | ProASIC3 FPGAs supporting 1.2 V to 1.5 V with Flash*Freeze technology |
| | RT ProASIC3 | Radiation-tolerant RT3PE600L and RT3PE3000L |
| | Military ProASIC3/EL | Military temperature A3PE600L, A3P1000, and A3PE3000L |
| | Automotive ProASIC3 | ProASIC3 FPGAs qualified for automotive applications |
| SmartFusion | SmartFusion | Mixed signal FPGA integrating ProASIC3 FPGA fabric, programmable microcontroller subsystem (MSS) which includes programmable analog and an ARM® Cortex™-M3 hard processor and flash memory in a monolithic device |
| Fusion | Fusion | Mixed signal FPGA integrating ProASIC3 FPGA fabric, programmable analog block, support for ARM® Cortex™-M1 soft processors, and flash memory into a monolithic device |
| ProASIC | ProASIC | First generation ProASIC devices |
| | ProASIC^PLUS | Second generation ProASIC devices |

*Note: *The device names link to the appropriate datasheet, including product brief, DC and switching characteristics, and packaging information.*

## *IGLOO Terminology*

In documentation, the terms IGLOO series and IGLOO devices refer to all of the IGLOO devices as listed in Table 12-1. Where the information applies to only one product line or limited devices, these exclusions will be explicitly stated.

## *ProASIC3 Terminology*

In documentation, the terms ProASIC3 series and ProASIC3 devices refer to all of the ProASIC3 devices as listed in Table 12-1. Where the information applies to only one product line or limited devices, these exclusions will be explicitly stated.

To further understand the differences between the IGLOO and ProASIC3 devices, refer to the *Industry's Lowest Power FPGAs Portfolio*.

# Programming Voltage (VPUMP) and VJTAG

Low-power flash devices support on-chip charge pumps, and therefore require only a single 3.3 V programming voltage for the VPUMP pin during programming. When the device is not being programmed, the VPUMP pin can be left floating or can be tied (pulled up) to any voltage between 0 V and 3.6 V[2]. During programming, the target board or the FlashPro4/3/3X programmer can provide VPUMP. FlashPro4/3/3X is capable of supplying VPUMP to a single device. If more than one device is to be programmed using FlashPro4/3/3X on a given board, FlashPro4/3/3X should not be relied on to supply the VPUMP voltage. A FlashPro4/3/3X programmer is not capable of providing reliable VJTAG voltage. The board must supply VJTAG voltage to the device and the VJTAG pin of the programmer header must be connected to the device VJTAG pin. Microsemi recommends that VPUMP[3] and VJTAG power supplies be kept separate with independent filtering capacitors rather than supplying them from a common rail. Refer to the "Board-Level Considerations" section on page 271 for capacitor requirements.

Low power flash device I/Os support a bank-based, voltage-supply architecture that simultaneously supports multiple I/O voltage standards (Table 12-2). By isolating the JTAG power supply in a separate bank from the user I/Os, low power flash devices provide greater flexibility with supply selection and simplify power supply and printed circuit board (PCB) design. The JTAG pins can be run at any voltage from 1.5 V to 3.3 V (nominal). Microsemi recommends that TCK be tied to GND through a 200 ohm to 1 Kohm resistor. This prevents a possible totempole current on the input buffer stage. For TDI, TMS, and TRST pins, the devices provide an internal nominal 10 Kohm pull-up resistor. During programming, all I/O pins, except for JTAG interface pins, are tristated and weakly pulled up to VCCI. This isolates the part and prevents the signals from floating. The JTAG interface pins are driven by the FlashPro4/3/3X during programming, including the TRST pin, which is driven HIGH.

***Table 12-2* • Power Supplies**

| Power Supply | Programming Mode | Current during Programming |
|---|---|---|
| VCC | 1.2 V / 1.5 V | < 70 mA |
| VCCI | 1.2 V / 1.5 V / 1.8 V / 2.5 V / 3.3 V (bank-selectable) | I/Os are weakly pulled up. |
| VJTAG | 1.2 V / 1.5 V / 1.8 V / 2.5 V / 3.3 V | < 20 mA |
| VPUMP | 3.15 V to 3.45 V | < 80 mA |

*Note: All supply voltages should be at 1.5 V or higher, regardless of the setting during normal operation, except for IGLOO nano, where 1.2 V VCC and VJTAG programming is allowed.*

# Nonvolatile Memory (NVM) Programming Voltage

SmartFusion and Fusion devices need stable VCCNVM/VCCENVM[3] (1.5 V power supply to the embedded nonvolatile memory blocks) and VCCOSC/VCCROSC[4] (3.3 V power supply to the integrated RC oscillator). The tolerance of VCCNVM/VCCENVM is ± 5% and VCCOSC/VCCROSC is ± 5%.

Unstable supply voltage on these pins can cause an NVM programming failure due to NVM page corruption. The NVM page can also be corrupted if the NVM reset pin has noise. This signal must be tied off properly.

Microsemi recommends installing the following capacitors[5] on the VCCNVM/VCCENVM and VCCOSC/VCCROSC pins:

- Add one bypass capacitor of 10 µF for each power supply plane followed by an array of decoupling capacitors of 0.1 µF.
- Add one 0.1 µF capacitor near each pin.

2. *During sleep mode in IGLOO devices connect VPUMP to GND.*
3. *VPUMP has to be quiet for successful programming. Therefore VPUMP must be separate and required capacitors must be installed close to the FPGA VPUMP pin.*
4. *VCCROSC is for SmartFusion.*
5. *The capacitors cannot guarantee reliable operation of the device if the board layout is not done properly.*

# IEEE 1532 (JTAG) Interface

The supported industry-standard IEEE 1532 programming interface builds on the IEEE 1149.1 (JTAG) standard. IEEE 1532 defines the standardized process and methodology for ISP. Both silicon and software issues are addressed in IEEE 1532 to create a simplified ISP environment. Any IEEE 1532 compliant programmer can be used to program low power flash devices. Device serialization is not supported when using the IEEE1532 standard. Refer to the standard for detailed information about IEEE 1532.

# Security

Unlike SRAM-based FPGAs that require loading at power-up from an external source such as a microcontroller or boot PROM, Microsemi nonvolatile devices are live at power-up, and there is no bitstream required to load the device when power is applied. The unique flash-based architecture prevents reverse engineering of the programmed code on the device, because the programmed data is stored in nonvolatile memory cells. Each nonvolatile memory cell is made up of small capacitors and any physical deconstruction of the device will disrupt stored electrical charges.

Each low power flash device has a built-in 128-bit Advanced Encryption Standard (AES) decryption core, except for the 30 k gate devices and smaller. Any FPGA core or FlashROM content loaded into the device can optionally be sent as encrypted bitstream and decrypted as it is loaded. This is particularly suitable for applications where device updates must be transmitted over an unsecured network such as the Internet. The embedded AES decryption core can prevent sensitive data from being intercepted (Figure 12-1 on page 265). A single 128-bit AES Key (32 hex characters) is used to encrypt FPGA core programming data and/or FlashROM programming data in the Microsemi tools. The low power flash devices also decrypt with a single 128-bit AES Key. In addition, low power flash devices support a Message Authentication Code (MAC) for authentication of the encrypted bitstream on-chip. This allows the encrypted bitstream to be authenticated and prevents erroneous data from being programmed into the device. The FPGA core, FlashROM, and Flash Memory Blocks (FBs), in Fusion only, can be updated independently using a programming file that is AES-encrypted (cipher text) or uses plain text.

# Security in ARM-Enabled Low Power Flash Devices

There are slight differences between the regular flash device and the ARM-enabled flash devices, which have the M1 prefix.

The AES key is used by Microsemi and preprogrammed into the device to protect the ARM IP. As a result, the design will be encrypted along with the ARM IP, according to the details below.

## Cortex-M1 and Cortex-M3 Device Security

Cortex-M1–enabled and Cortex-M3 devices are shipped with the following security features:

- FPGA array enabled for AES-encrypted programming and verification
- FlashROM enabled for AES-encrypted write and verify
- Embedded Flash Memory enabled for AES encrypted write

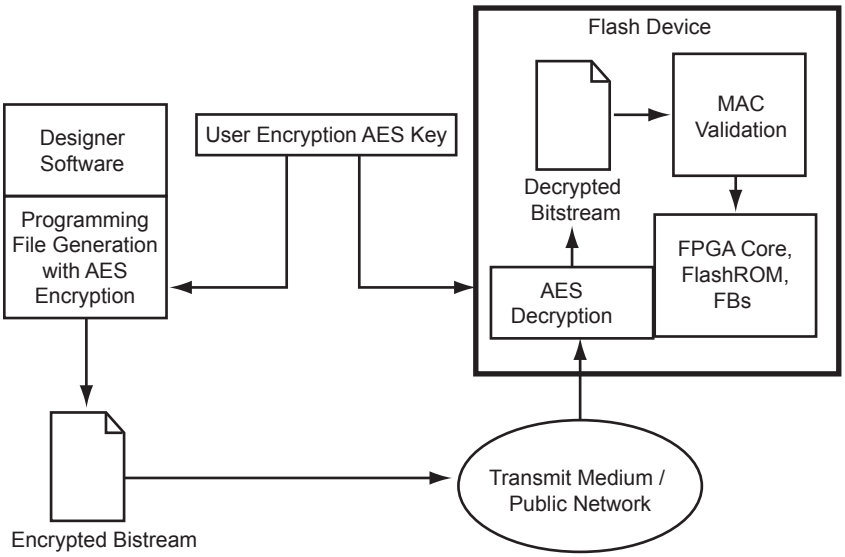


***Figure 12-1*** **• AES-128 Security Features**

Figure 12-2 shows different applications for ISP programming.

1. In a trusted programming environment, you can program the device using the unencrypted (plaintext) programming file.
2. You can program the AES Key in a trusted programming environment and finish the final programming in an untrusted environment using the AES-encrypted (cipher text) programming file.
3. For the remote ISP updating/reprogramming, the AES Key stored in the device enables the encrypted programming bitstream to be transmitted through the untrusted network connection.

Microsemi low power flash devices also provide the unique Microsemi FlashLock feature, which protects the Pass Key and AES Key. Unless the original FlashLock Pass Key is used to unlock the device, security settings cannot be modified. Microsemi does not support read-back of FPGA core-programmed data; however, the FlashROM contents can selectively be read back (or disabled) via the JTAG port based on the security settings established by the Microsemi Designer software. Refer to the "Security in Low Power Flash Devices" section on page 235 for more information.

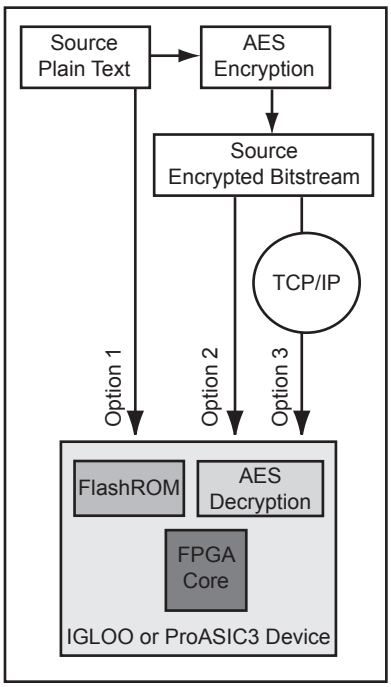


***Figure 12-2* • Different ISP Use Models**

# FlashROM and Programming Files

Each low power flash device has 1 kbit of on-chip, nonvolatile flash memory that can be accessed from the FPGA core. This nonvolatile FlashROM is arranged in eight pages of 128 bits (Figure 12-3). Each page can be programmed independently, with or without the 128-bit AES encryption. The FlashROM can only be programmed via the IEEE 1532 JTAG port and cannot be programmed from the FPGA core. In addition, during programming of the FlashROM, the FPGA core is powered down automatically by the on-chip programming control logic.

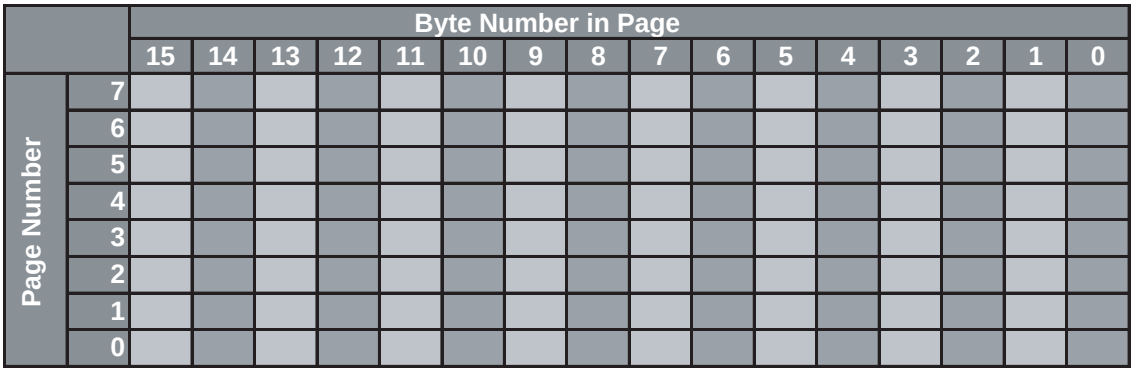


***Figure 12-3*** **• FlashROM Architecture**

When using FlashROM combined with AES, many subscription-based applications or device serialization applications are possible. The FROM configurator found in the Libero SoC Catalog supports easy management of the FlashROM contents, even over large numbers of devices. The FROM configurator can support FlashROM contents that contain the following:

- Static values
- Random numbers
- Values read from a file
- Independent updates of each page

In addition, auto-incrementing of fields is possible. In applications where the FlashROM content is different for each device, you have the option to generate a single STAPL file for all the devices or individual serialization files for each device. For more information on how to generate the FlashROM content for device serialization, refer to the "FlashROM in Microsemi's Low Power Flash Devices" section on page 117.

Libero SoC includes a unique tool to support the generation and management of FlashROM and FPGA programming files. This tool is called FlashPoint.

Depending on the applications, designers can use the FlashPoint software to generate a STAPL file with different contents. In each case, optional AES encryption and/or different security settings can be set.

In Designer, when you click the Programming File icon, FlashPoint launches, and you can generate STAPL file(s) with four different cases (Figure 12-4 on page 268). When the serialization feature is used during the configuration of FlashROM, you can generate a single STAPL file that will program all the devices or an individual STAPL file for each device.

The following cases present the FPGA core and FlashROM programming file combinations that can be used for different applications. In each case, you can set the optional security settings (FlashLock Pass Key and/or AES Key) depending on the application.

1. A single STAPL file or multiple STAPL files with multiple FlashROM contents and the FPGA core content. A single STAPL file will be generated if the device serialization feature is not used. You can program the whole FlashROM or selectively program individual pages.
2. A single STAPL file for the FPGA core content

3. A single STAPL file or multiple STAPL files with multiple FlashROM contents. A single STAPL file will be generated if the device serialization feature is not used. You can program the whole FlashROM or selectively program individual pages.
4. A single STAPL file to configure the security settings for the device, such as the AES Key and/or Pass Key.

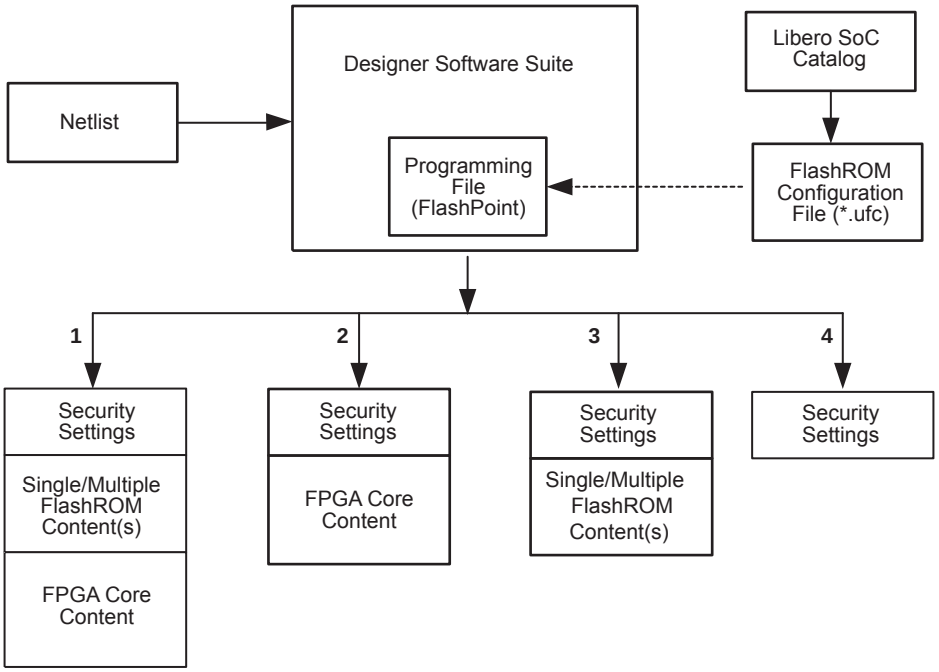


***Figure 12-4*** **• Flexible Programming File Generation for Different Applications**

# Programming Solution

For device programming, any IEEE 1532–compliant programmer can be used; however, the FlashPro4/3/3X programmer must be used to control the low power flash device's rich security features and FlashROM programming options. The FlashPro4/3/3X programmer is a low-cost portable programmer for the Microsemi flash families. It can also be used with a powered USB hub for parallel programming. General specifications for the FlashPro4/3/3X programmer are as follows:

- Programming clock – TCK is used with a maximum frequency of 20 MHz, and the default frequency is 4 MHz.
- Programming file – STAPL
- Daisy chain – Supported. You can use the ChainBuilder software to build the programming file for the chain.
- Parallel programming – Supported. Multiple FlashPro4/3/3X programmers can be connected together using a powered USB hub or through the multiple USB ports on the PC.
- Power supply – The target board must provide VCC, VCCI, VPUMP, and VJTAG during programming. However, if there is only one device on the target board, the FlashPro4/3/3X programmer can generate the required VPUMP voltage from the USB port.

# ISP Programming Header Information

The FlashPro4/3/3X programming cable connector can be connected with a 10-pin, 0.1"-pitch programming header. The recommended programming headers are manufactured by AMP (103310-1) and 3M (2510-6002UB). If you have limited board space, you can use a compact programming header manufactured by Samtec (FTSH-105-01-L-D-K). Using this compact programming header, you are required to order an additional header adapter manufactured by Microsemi SoC Products Group (FP3-10PIN-ADAPTER-KIT).

Existing ProASIC$^{PLUS}$ family customers who are using the Samtec Small Programming Header (FTSH-113-01-L-D-K) and are planning to migrate to IGLOO or ProASIC3 devices can also use FP3-10PIN-ADAPTER-KIT.

***Table 12-3* • Programming Header Ordering Codes**

| Manufacturer | Part Number | Description |
|---|---|---|
| AMP | 103310-1 | 10-pin, 0.1"-pitch cable header (right-angle PCB mount angle) |
| 3M | 2510-6002UB | 10-pin, 0.1"-pitch cable header (straight PCB mount angle) |
| Samtec | FTSH-113-01-L-D-K | Small programming header supported by FlashPro and Silicon Sculptor |
| Samtec | FTSH-105-01-L-D-K | Compact programming header |
| Samtec | FFSD-05-D-06.00-01-N | 10-pin cable with 50 mil pitch sockets; included in FP3-10PIN-ADAPTER-KIT. |
| Microsemi | FP3-10PIN-ADAPTER-KIT | Transition adapter kit to allow FP3 to be connected to a micro 10-pin header (50 mil pitch). Includes a 6 inch Samtec FFSD-05-D-06.00-01-N cable in the kit. The transition adapter board was previously offered as FP3-26PIN-ADAPTER and includes a 26-pin adapter for design transitions from ProASIC$^{PLUS}$ based boards to ProASIC3 based boards. |

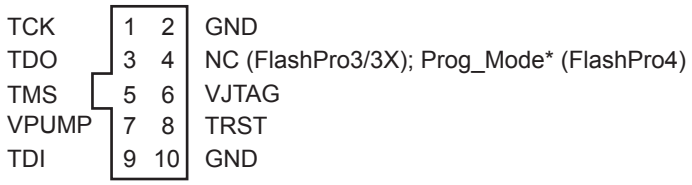


Note: **Prog_Mode on FlashPro4 is an output signal that goes High during device programming and returns to Low when programming is complete. This signal can be used to drive a system to provide a 1.5 V programming signal to IGLOO nano, ProASIC3L, and RT ProASIC3 devices that can run with 1.2 V core voltage but require 1.5 V for programming. IGLOO nano V2 devices can be programmed at 1.2 V core voltage (when using FlashPro4 only), but IGLOO nano V5 devices are programmed with a VCC core voltage of 1.5 V.*

***Figure 12-5* • Programming Header (top view)**

***Table 12-4* • Programming Header Pin Numbers and Description**

| Pin | Signal | Source | Description |
|---|---|---|---|
| 1 | TCK | Programmer | JTAG Clock |
| 2 | GND[1] | – | Signal Reference |
| 3 | TDO | Target Board | Test Data Output |
| 4 | NC | – | No Connect (FlashPro3/3X); Prog_Mode (FlashPro4). See note associated with Figure 12-5 on page 269 regarding Prog_Mode on FlashPro4. |
| 5 | TMS | Programmer | Test Mode Select |
| 6 | VJTAG | Target Board | JTAG Supply Voltage |
| 7 | VPUMP[2] | Programmer/Target Board | Programming Supply Voltage |
| 8 | nTRST | Programmer | JTAG Test Reset (Hi-Z with 10 kΩ pull-down, HIGH, LOW, or toggling) |
| 9 | TDI | Programmer | Test Data Input |
| 10 | GND[1] | – | Signal Reference |

*Notes:*

1. *Both GND pins must be connected.*
2. *FlashPro4/3/3X can provide VPUMP if there is only one device on the target board.*

# Board-Level Considerations

A bypass capacitor is required from VPUMP to GND for all low power flash devices during programming. This bypass capacitor protects the devices from voltage spikes that may occur on the VPUMP supplies during the erase and programming cycles. Refer to the "Pin Descriptions and Packaging" chapter of the appropriate device datasheet for specific recommendations. For proper programming, 0.01 µF and 0.33 µF capacitors (both rated at 16 V) are to be connected in parallel across VPUMP and GND, and positioned as close to the FPGA pins as possible. The bypass capacitor must be placed within 2.5 cm of the device pins.

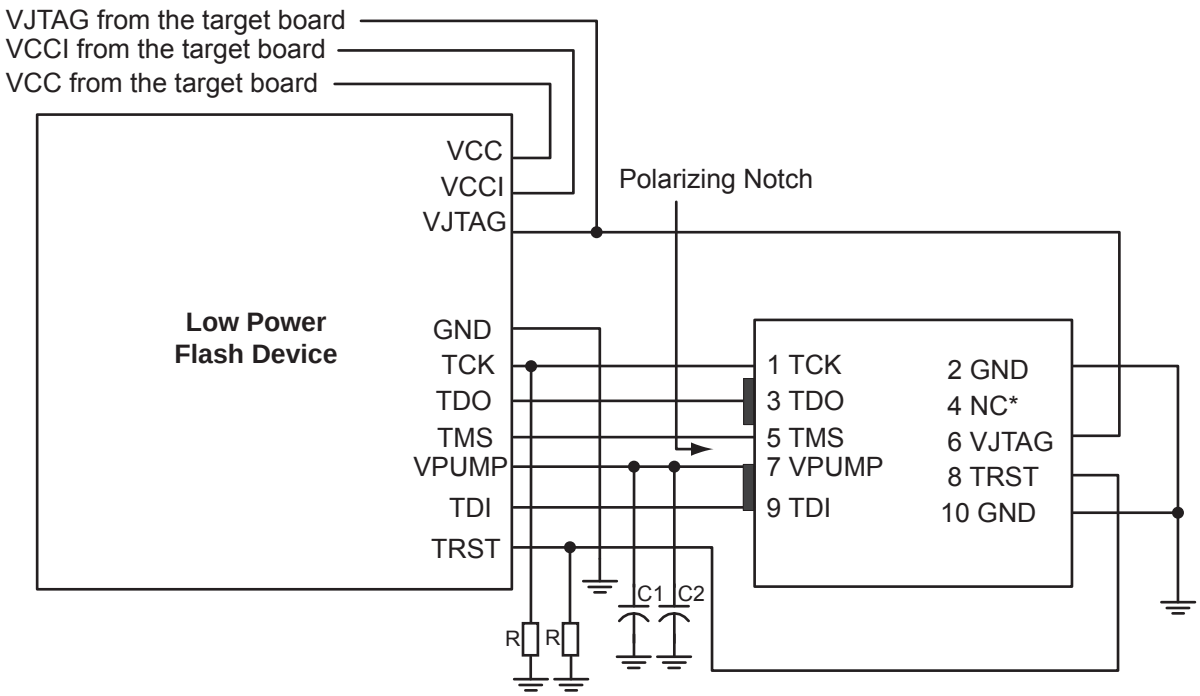


*Note:* **NC (FlashPro3/3X); Prog_Mode (FlashPro4). Prog_Mode on FlashPro4 is an output signal that goes High during device programming and returns to Low when programming is complete. This signal can be used to drive a system to provide a 1.5 V programming signal to IGLOO nano, ProASIC3L, and RT ProASIC3 devices that can run with 1.2 V core voltage but require 1.5 V for programming. IGLOO nano V2 devices can be programmed at 1.2 V core voltage (when using FlashPro4 only), but IGLOO nano V5 devices are programmed with a VCC core voltage of 1.5 V.*

***Figure 12-6* • Board Layout and Programming Header Top View**

## Troubleshooting Signal Integrity

### *Symptoms of a Signal Integrity Problem*

A signal integrity problem can manifest itself in many ways. The problem may show up as extra or dropped bits during serial communication, changing the meaning of the communication. There is a normal variation of threshold voltage and frequency response between parts even from the same lot. Because of this, the effects of signal integrity may not always affect different devices on the same board in the same way. Sometimes, replacing a device appears to make signal integrity problems go away, but this is just masking the problem. Different parts on identical boards will exhibit the same problem sooner or later. It is important to fix signal integrity problems early. Unless the signal integrity problems are severe enough to completely block all communication between the device and the programmer, they may show up as subtle problems. Some of the FlashPro4/3/3X exit codes that are caused by signal integrity problems are listed below. Signal integrity problems are not the only possible cause of these

errors, but this list is intended to show where problems can occur. FlashPro4/3/3X allows TCK to be lowered from 6 MHz down to 1 MHz to allow you to address some signal integrity problems that may occur with impedance mismatching at higher frequencies. Customers are expected to troubleshoot board-level signal integrity issues by measuring voltages and taking scope plots.

### Scan Chain Failure

Normally, the FlashPro4/3/3X Scan Chain command expects to see 0x1 on the TDO pin. If the command reports reading 0x0 or 0x3, it is seeing the TDO pin stuck at 0 or 1. The only time the TDO pin comes out of tristate is when the JTAG TAP state machine is in the Shift-IR or Shift-DR state. If noise or reflections on the TCK or TMS lines have disrupted the correct state transitions, the device's TAP state controller might not be in one of these two states when the programmer tries to read the device. When this happens, the output is floating when it is read and does not match the expected data value. This can also be caused by a broken TDO net. Only a small amount of data is read from the device during the Scan Chain command, so marginal problems may not always show up during this command. Occasionally a faulty programmer can cause intermittent scan chain failures.

### Exit 11

This error occurs during the verify stage of programming a device. After programming the design into the device, the device is verified to ensure it is programmed correctly. The verification is done by shifting the programming data into the device. An internal comparison is performed within the device to verify that all switches are programmed correctly. Noise induced by poor signal integrity can disrupt the writes and reads or the verification process and produce a verification error. While technically a verification error, the root cause is often related to signal integrity.

Refer to the *FlashPro User's Guide* for other error messages and solutions. For the most up-to-date known issues and solutions, refer to http://www.microsemi.com/soc/support.

# Conclusion

IGLOO, ProASIC3, SmartFusion, and Fusion devices offer a low-cost, single-chip solution that is live at power-up through nonvolatile flash technology. The FlashLock Pass Key and 128-bit AES Key security features enable secure ISP in an untrusted environment. On-chip FlashROM enables a host of new applications, including device serialization, subscription-based applications, and IP addressing. Additionally, as the FlashROM is nonvolatile, all of these services can be provided without battery backup.

# Related Documents

## User's Guides

*FlashPro User's Guide*

http://www.microsemi.com/soc/documents/flashpro_ug.pdf

# List of Changes

The following table lists critical changes that were made in each revision of the chapter.

| Date | Changes | Page |
|---|---|---|
| August 2012 | This chapter will now be published standalone as an application note in addition to being part of the IGLOO/ProASIC3/Fusion FPGA fabric user's guides (SAR 38769). | N/A |
| | The "ISP Programming Header Information" section was revised to update the description of FP3-10PIN-ADAPTER-KIT in Table 12-3 • Programming Header Ordering Codes, clarifying that it is the adapter kit used for ProASIC$^{PLUS}$ based boards, and also for ProASIC3 based boards where a compact programming header is being used (SAR 36779). | 269 |
| June 2011 | The VPUMP programming mode voltage was corrected in Table 12-2 • Power Supplies. The correct value is 3.15 V to 3.45 V (SAR 30668). | 263 |
| | The notes associated with Figure 12-5 • Programming Header (top view) and Figure 12-6 • Board Layout and Programming Header Top View were revised to make clear the fact that IGLOO nano V2 devices can be programmed at 1.2 V (SAR 30787). | 269, 271 |
| | Figure 12-6 • Board Layout and Programming Header Top View was revised to include resistors tying TCK and TRST to GND. Microsemi recommends tying off TCK and TRST to GND if JTAG is not used (SAR 22921). RT ProASIC3 was added to the list of device families. | 271 |
| | In the "ISP Programming Header Information" section, the kit for adapting ProASIC$^{PLUS}$ devices was changed from FP3-10PIN-ADAPTER-KIT to FP3-26PIN-ADAPTER-KIT (SAR 20878). | 269 |
| July 2010 | This chapter is no longer published separately with its own part number and version but is now part of several FPGA fabric user's guides. | N/A |
| | References to FlashPro4 and FlashPro3X were added to this chapter, giving distinctions between them. References to SmartGen were deleted and replaced with Libero IDE Catalog. | N/A |
| | The "ISP Architecture" section was revised to indicate that V2 devices can be programmed at 1.2 V VCC with FlashPro4. | 261 |
| | SmartFusion was added to Table 12-1 • Flash-Based FPGAs Supporting ISP. | 262 |
| | The "Programming Voltage (VPUMP) and VJTAG" section was revised and 1.2 V was added to Table 12-2 • Power Supplies. | 263 |
| | The "Nonvolatile Memory (NVM) Programming Voltage" section is new. | 263 |
| | Cortex-M3 was added to the "Cortex-M1 and Cortex-M3 Device Security" section. | 265 |
| | In the "ISP Programming Header Information" section, the additional header adapter ordering number was changed from FP3-26PIN-ADAPTER to FP3-10PIN-ADAPTER-KIT, which contains 26-pin migration capability. | 269 |
| | The description of NC was updated in Figure 12-5 • Programming Header (top view), Table 12-4 • Programming Header Pin Numbers and Description and Figure 12-6 • Board Layout and Programming Header Top View. | 269, 270 |
| | The "Symptoms of a Signal Integrity Problem" section was revised to add that customers are expected to troubleshoot board-level signal integrity issues by measuring voltages and taking scope plots. "FlashPro4/3/3X allows TCK to be lowered from 6 MHz down to 1 MHz to allow you to address some signal integrity problems" formerly read, "from 24 MHz down to 1 MHz." "The Scan Chain command expects to see 0x2" was changed to 0x1. | 271 |

| Date | Changes | Page |
|---|---|---|
| July 2010 (continued) | The "Chain Integrity Test Error Analyze Chain Failure" section was renamed to the "Scan Chain Failure" section, and the Analyze Chain command was changed to Scan Chain. It was noted that occasionally a faulty programmer can cause scan chain failures. | 272 |
| v1.5 (August 2009) | The "CoreMP7 Device Security" section was removed from "Security in ARM-Enabled Low Power Flash Devices", since M7-enabled devices are no longer supported. | 265 |
| v1.4 (December 2008) | The "ISP Architecture" section was revised to include information about core voltage for IGLOO V2 and ProASIC3L devices, as well as 50 mV increments allowable in Designer software. | 261 |
| | IGLOO nano and ProASIC3 nano devices were added to Table 12-1 • Flash-Based FPGAs Supporting ISP. | 262 |
| | A second capacitor was added to Figure 12-6 • Board Layout and Programming Header Top View. | 271 |
| v1.3 (October 2008) | The "ISP Support in Flash-Based Devices" section was revised to include new families and make the information more concise. | 262 |
| v1.2 (June 2008) | The following changes were made to the family descriptions in Table 12-1 • Flash-Based FPGAs Supporting ISP:<br>• ProASIC3L was updated to include 1.5 V.<br>• The number of PLLs for ProASIC3E was changed from five to six. | 262 |
| v1.1 (March 2008) | The "ISP Architecture" section was updated to included the IGLOO PLUS family in the discussion of family-specific support. The text, "When 1.2 V is used, the device can be reprogrammed in-system at 1.5 V only," was revised to state, "Although the device can operate at 1.2 V core voltage, the device can only be reprogrammed when all supplies (VCC, VCCI, and VJTAG) are at 1.5 V." | 261 |
| | The "ISP Support in Flash-Based Devices" section and Table 12-1 • Flash-Based FPGAs Supporting ISP were updated to include the IGLOO PLUS family. The "IGLOO Terminology" section and "ProASIC3 Terminology" section are new. | 262 |
| | The "Security" section was updated to mention that 15 k gate devices do not have a built-in 128-bit decryption core. | 264 |
| | Table 12-2 • Power Supplies was revised to remove the Normal Operation column and add a table note stating, "All supply voltages should be at 1.5 V or higher, regardless of the setting during normal operation." | 263 |
| | The "ISP Programming Header Information" section was revised to change FP3-26PIN-ADAPTER to FP3-10PIN-ADAPTER-KIT. Table 12-3 • Programming Header Ordering Codes was updated with the same change, as well as adding the part number FFSD-05-D-06.00-01-N, a 10-pin cable with 50-mil-pitch sockets. | 269 |
| | The "Board-Level Considerations" section was updated to describe connecting two capacitors in parallel across VPUMP and GND for proper programming. | 271 |
| v1.0 (January 2008) | Information was added to the "Programming Voltage (VPUMP) and VJTAG" section about the JTAG interface pin. | 263 |
| 51900055-2/7.06 | ACTgen was changed to SmartGen. | N/A |
| | In Figure 12-6 • Board Layout and Programming Header Top View, the order of the text was changed to:<br>VJTAG from the target board<br>VCCI from the target board<br>VCC from the target board | 271 |

# 13 – Core Voltage Switching Circuit for IGLOO and ProASIC3L In-System Programming

## Introduction

The IGLOO® and ProASIC®3L families offer devices that can be powered by either 1.5 V or, in the case of V2 devices, a core supply voltage anywhere in the range of 1.2 V to 1.5 V, in 50 mV increments.

Since IGLOO and ProASIC3L devices are flash-based, they can be programmed and reprogrammed multiple times in-system using Microsemi FlashPro3. FlashPro3 uses the JTAG standard interface (IEEE 1149.1) and STAPL file (defined in JESD 71 to support programming of programmable devices using IEEE 1149.1) for in-system configuration/programming (IEEE 1532) of a device. Programming can also be executed by other methods, such as an embedded microcontroller that follows the same standards above.

All IGLOO and ProASIC3L devices must be programmed with the VCC core voltage at 1.5 V. Therefore, applications using IGLOO or ProASIC3L devices powered by a 1.2 V supply must switch the core supply to 1.5 V for in-system programming.

The purpose of this document is to describe an easy-to-use and cost-effective solution for switching the core supply voltage from 1.2 V to 1.5 V during in-system programming for IGLOO and ProASIC3L devices.

# Microsemi's Flash Families Support Voltage Switching Circuit

The flash FPGAs listed in Table 13-1 support the voltage switching circuit feature and the functions described in this document.

***Table 13-1* • Flash-Based FPGAs Supporting Voltage Switching Circuit**

| Series | Family* | Description |
|---|---|---|
| IGLOO | IGLOO | Ultra-low power 1.2 V to 1.5 V FPGAs with Flash*Freeze technology |
| | IGLOOe | Higher density IGLOO FPGAs with six PLLs and additional I/O standards |
| | IGLOO nano | The industry's lowest-power, smallest-size solution |
| | IGLOO PLUS | IGLOO FPGAs with enhanced I/O capabilities |
| ProASIC3 | ProASIC3L | ProASIC3 FPGAs supporting 1.2 V to 1.5 V with Flash*Freeze technology |
| | RT ProASIC3 | Radiation-tolerant RT3PE600L and RT3PE3000L |
| | Military ProASIC3/EL | Military temperature A3PE600L, A3P1000, and A3PE3000L |

*Note: *The device names link to the appropriate datasheet, including product brief, DC and switching characteristics, and packaging information.*

## *IGLOO Terminology*

In documentation, the terms IGLOO series and IGLOO devices refer to all of the IGLOO devices as listed in Table 13-1. Where the information applies to only one product line or limited devices, these exclusions will be explicitly stated.

## *ProASIC3 Terminology*

In documentation, the terms ProASIC3 series and ProASIC3 devices refer to all of the ProASIC3 devices as listed in Table 13-1. Where the information applies to only one product line or limited devices, these exclusions will be explicitly stated.

To further understand the differences between the IGLOO and ProASIC3 devices, refer to the *Industry's Lowest Power FPGAs Portfolio*.

# Circuit Description

All IGLOO devices as well as the ProASIC3L product family are available in two versions: V5 devices, which are powered by a 1.5 V supply and V2 devices, which are powered by a supply anywhere in the range of 1.2 V to 1.5 V in 50 mV increments. Applications that use IGLOO or ProASIC3L devices powered by a 1.2 V core supply must have a mechanism that switches the core voltage from 1.2 V (or other voltage below 1.5 V) to 1.5 V during in-system programming (ISP). There are several possible techniques to meet this requirement. Microsemi recommends utilizing a linear voltage regulator, a resistor voltage divider, and an N-Channel Digital FET to set the appropriate VCC voltage, as shown in Figure 13-1.

Where 1.2 V is mentioned in the following text, the meaning applies to any voltage below the 1.5 V range. Resistor values in the figures have been calculated for 1.2 V, so refer to power regulator datasheets if a different core voltage is required.

The main component of Microsemi's recommended circuit is the LTC3025 linear voltage regulator from LinearTech. The output voltage of the LTC3025 on the OUT pin is set by the ratio of two external resistors, R37 and R38, in a voltage divider. The linear voltage regulator adjusts the voltage on the OUT pin to maintain the ADJ pin voltage at 0.4 V (referenced to ground). By using an R38 value of 40.2 kΩ and an R37 value of 80.6 kΩ, the output voltage on the OUT pin is 1.2 V. To achieve 1.5 V on the OUT pin, R44 can be used in parallel with R38. The OUT pin can now be used as a switchable source for the VCC supply. Refer to the *LTC3025 Linear Voltage Regulator datasheet* for more information.

In Figure 13-1, the N-Channel Digital FET is used to enable and disable R44. This FET is controlled by the JTAG TRST signal driven by the FlashPro3 programmer. During programming of the device, the TRST signal is driven HIGH by the FlashPro3, and turns the N-Channel Digital FET ON. When the FET is ON, R44 becomes enabled as a parallel resistance to R38, which forces the regulator to set OUT to 1.5 V.

When the FlashPro3 is connected and not in programming mode or when it is not connected, the pull-down resistor, R10, will pull the TRST signal LOW. When this signal is LOW, the N-Channel Digital FET is "open" and R44 is not part of the resistance seen by the LTC3025. The new resistance momentarily changes the voltage value on the ADJ pin, which in turn causes the output of the LTC3025 to compensate by setting OUT to 1.2 V. Now the device will run in regular active mode at the regular 1.2 V core voltage.

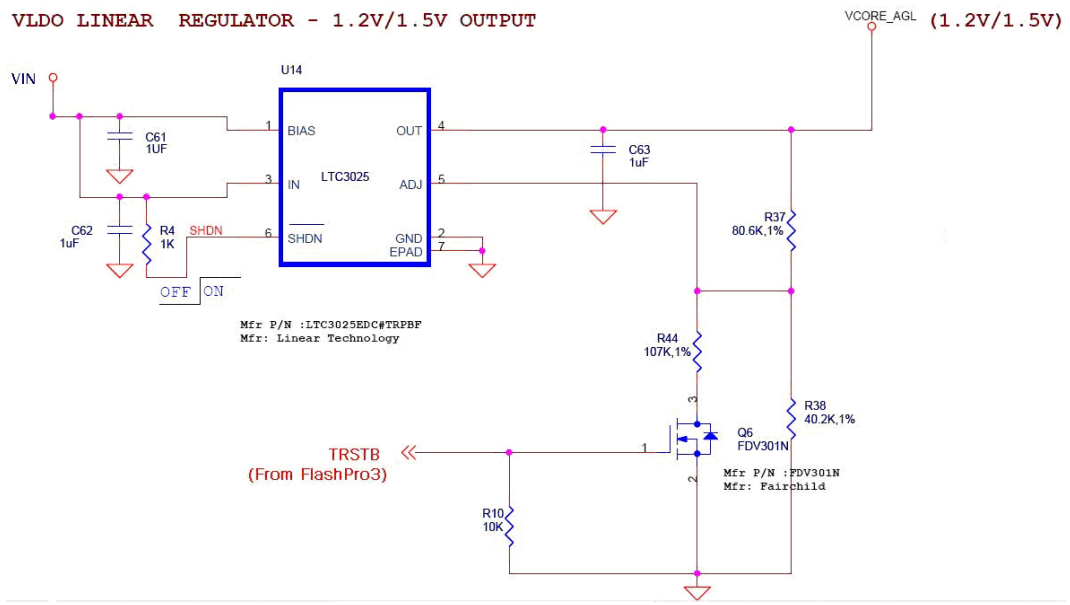


***Figure 13-1* • Circuit Diagram**

# Circuit Verification

The power switching circuit recommended above is implemented on Microsemi's Icicle board (Figure 13-2). On the Icicle board, VJTAGENB is used to control the N-Channel Digital FET; however, this circuit was modified to use TRST instead of VJTAGENB in this application. There are three important aspects of this circuit that were verified:

1. The rise on VCC from 1.2 V to 1.5 V when TRST is HIGH
2. VCC rises to 1.5 V before programming begins.
3. VCC switches from 1.5 V to 1.2 V when TRST is LOW.

## Verification Steps

1. The rise on VCC from 1.2 V to 1.5 V when TRST is HIGH.

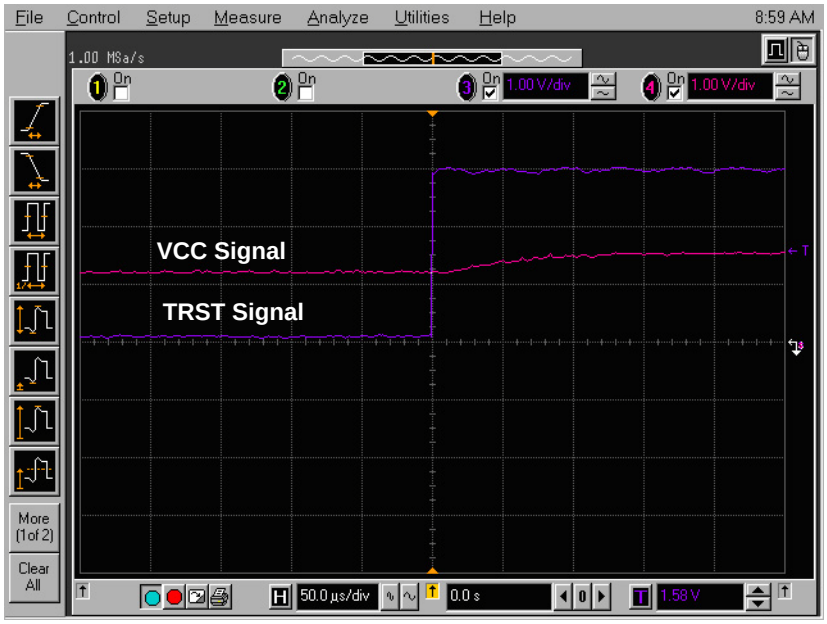


***Figure 13-2*** **• Core Voltage on the IGLOO AGL125-QNG132 Device**

In the oscilloscope plots (Figure 13-2), the TRST from FlashPro3 and the VCC core voltage of the IGLOO device are labeled. This plot shows the rise characteristic of the TRST signal from FlashPro3. Once the TRST signal is asserted HIGH, the LTC3025 shown in Figure 13-1 on page 277 senses the increase in voltage and changes the output from 1.2 V to 1.5 V. It takes the circuit approximately 100 µs to respond to TRST and change the voltage to 1.5 V on the VCC core.

2. VCC rises to 1.5 V before programming begins.

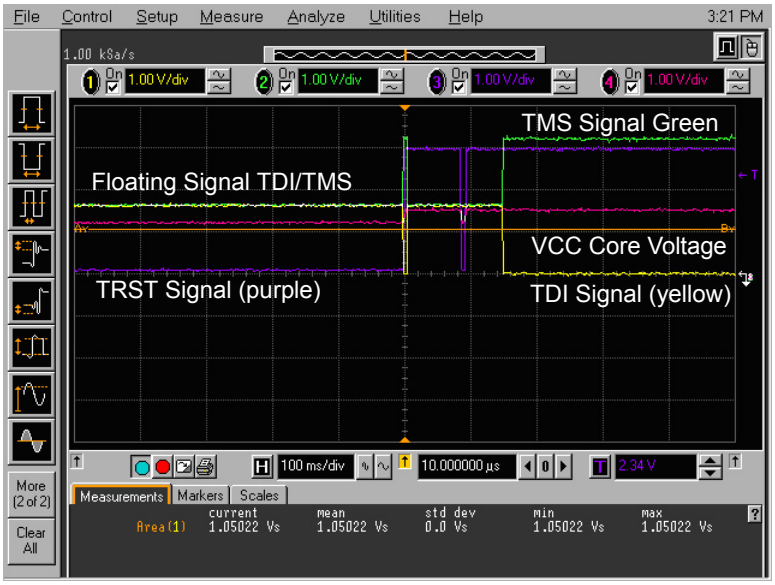


***Figure 13-3*** **• Programming Algorithm**

The oscilloscope plot in Figure 13-3 shows a wider time interval for the programming algorithm and includes the TDI and TMS signals from the FlashPro3. These signals carry the programming information that is programmed into the device and should only start toggling after the $V_{CC}$ core voltage reaches 1.5 V. Again, TRST from FlashPro3 and the $V_{CC}$ core voltage of the IGLOO device are labeled. As shown in Figure 13-3, TDI and TMS are floating initially, and the core voltage is 1.2 V. When a programming command on the FlashPro3 is executed, TRST is driven HIGH and TDI is momentarily driven to ground. In response to the HIGH TRST signal, the circuit responds and pulls the core voltage to 1.5 V. After 100 ms, TRST is briefly driven LOW by the FlashPro software. This is expected behavior that ensures the device JTAG state machine is in Reset prior to programming. TRST remains HIGH for the duration of the programming. It can be seen in Figure 13-3 that the VCC core voltage signal remains at 1.5 V for approximately 50 ms before information starts passing through on TDI and TMS. This confirms that the voltage switching circuit drives the VCC core supply voltage to 1.5 V prior to programming.

3. VCC switches from 1.5 V to 1.2 V when TRST is LOW.

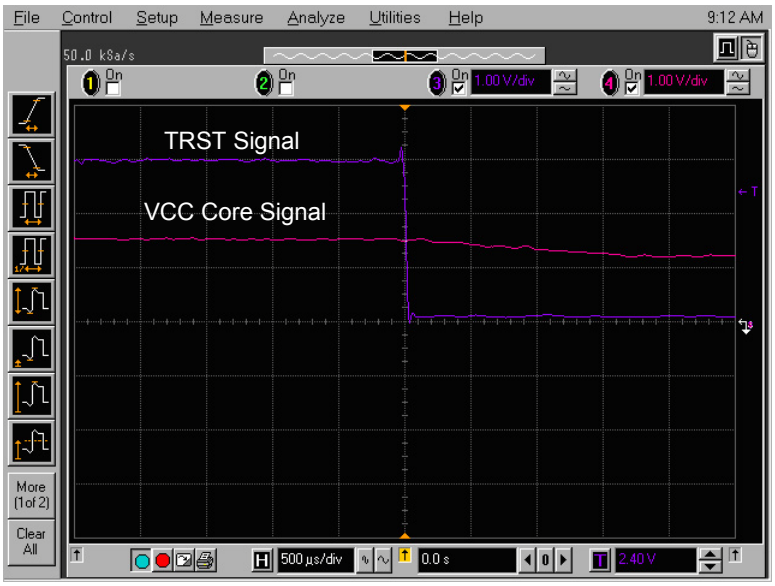


***Figure 13-4* • TRST Toggled LOW**

In Figure 13-4, the TRST signal and the VCC core voltage signal are labeled. As TRST is pulled to ground, the core voltage is observed to switch from 1.5 V to 1.2 V. The observed fall time is approximately 2 ms.

# DirectC

The above analysis is based on FlashPro3, but there are other solutions to ISP, such as DirectC. DirectC is a microprocessor program that can be run in-system to program Microsemi flash devices. For FlashPro3, TRST is the most convenient control signal to use for the recommended circuit. However, for DirectC, users may use any signal to control the FET. For example, the DirectC code can be edited so that a separate non-JTAG signal can be asserted from the microcontroller that signals the board that it is about to start programming the device. After asserting the N-Channel Digital FET control signal, the programming algorithm must allow sufficient time for the supply to rise to 1.5 V before initiating DirectC programming. As seen in Figure 13-3 on page 279, 50 ms is adequate time. Depending on the size of the PCB and the capacitance on the VCC supply, results may vary from system to system. Microsemi recommends using a conservative value for the wait time to make sure that the VCC core voltage is at the right level.

# Conclusion

For applications using IGLOO and ProASIC3L low power FPGAs and taking advantage of the low core voltage power supplies with less than 1.5 V operation, there must be a way for the core voltage to switch from 1.2 V (or other voltage) to 1.5 V, which is required during in-system programming. The circuit explained in this document illustrates one simple, cost-effective way of handling this requirement. A JTAG signal from the FlashPro3 programmer allows the circuit to sense when programming is in progress, enabling it to switch to the correct core voltage.

# List of Changes

The following table lists critical changes that were made in each revision of the chapter.

| Date | Changes | Page |
|---|---|---|
| July 2010 | This chapter is no longer published separately with its own part number and version but is now part of several FPGA fabric user's guides. | N/A |
| v1.1<br>(October 2008) | The "Introduction" was revised to include information about the core supply voltage range of operation in V2 devices. | 275 |
| | IGLOO nano device support was added to Table 13-1 • Flash-Based FPGAs Supporting Voltage Switching Circuit. | 276 |
| | The "Circuit Description" section was updated to include IGLOO PLUS core operation from 1.2 V to 1.5 V in 50 mV increments. | 277 |
| v1.0<br>(August 2008) | The "Microsemi's Flash Families Support Voltage Switching Circuit" section was revised to include new families and make the information more concise. | 276 |

# 14 – Microprocessor Programming of Microsemi's Low Power Flash Devices

## Introduction

The Fusion, IGLOO, and ProASIC3 families of flash FPGAs support in-system programming (ISP) with the use of a microprocessor. Flash-based FPGAs store their configuration information in the actual cells within the FPGA fabric. SRAM-based devices need an external configuration memory, and hybrid nonvolatile devices store the configuration in a flash memory inside the same package as the SRAM FPGA. Since the programming of a true flash FPGA is simpler, requiring only one stage, it makes sense that programming with a microprocessor in-system should be simpler than with other SRAM FPGAs. This reduces bill-of-materials costs and printed circuit board (PCB) area, and increases system reliability.

Nonvolatile flash technology also gives the low power flash devices the advantage of a secure, low power, live-at-power-up, and single-chip solution. Low power flash devices are reprogrammable and offer time-to-market benefits at an ASIC-level unit cost. These features enable engineers to create high-density systems using existing ASIC or FPGA design flows and tools.

This document is an introduction to microprocessor programming only. To explain the difference between the options available, user's guides for DirectC and STAPL provide more detail on implementing each style.

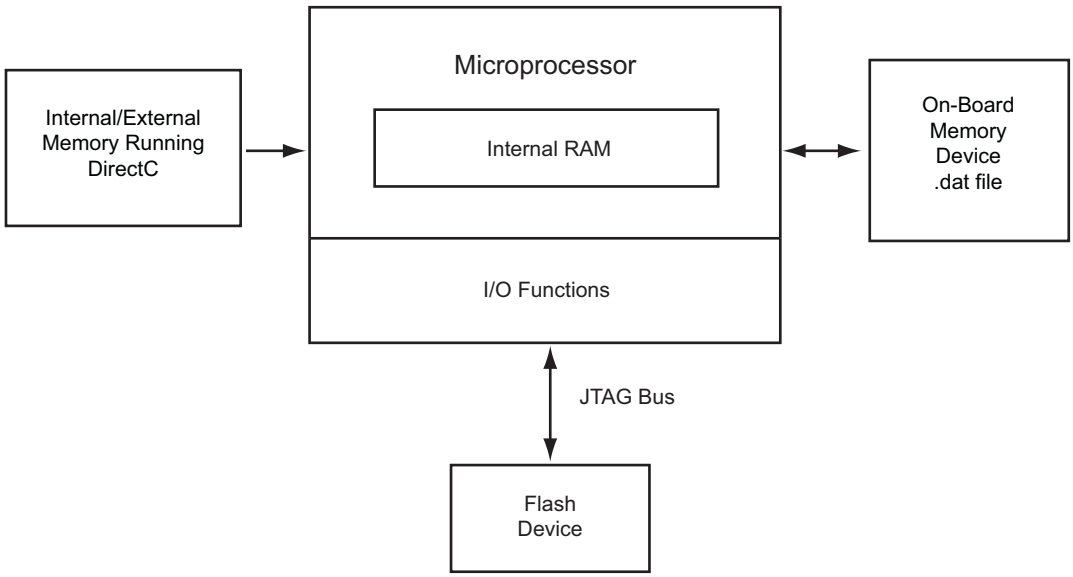


***Figure 14-1*** **• ISP Using Microprocessor**

# Microprocessor Programming Support in Flash Devices

The flash-based FPGAs listed in Table 14-1 support programming with a microprocessor and the functions described in this document.

***Table 14-1* • Flash-Based FPGAs**

| Series | Family* | Description |
|---|---|---|
| IGLOO | IGLOO | Ultra-low power 1.2 V to 1.5 V FPGAs with Flash*Freeze technology |
| | IGLOOe | Higher density IGLOO FPGAs with six PLLs and additional I/O standards |
| | IGLOO nano | The industry's lowest-power, smallest-size solution |
| | IGLOO PLUS | IGLOO FPGAs with enhanced I/O capabilities |
| ProASIC3 | ProASIC3 | Low power, high-performance 1.5 V FPGAs |
| | ProASIC3E | Higher density ProASIC3 FPGAs with six PLLs and additional I/O standards |
| | ProASIC3 nano | Lowest-cost solution with enhanced I/O capabilities |
| | ProASIC3L | ProASIC3 FPGAs supporting 1.2 V to 1.5 V with Flash*Freeze technology |
| | RT ProASIC3 | Radiation-tolerant RT3PE600L and RT3PE3000L |
| | Military ProASIC3/EL | Military temperature A3PE600L, A3P1000, and A3PE3000L |
| | Automotive ProASIC3 | ProASIC3 FPGAs qualified for automotive applications |
| Fusion | Fusion | Mixed signal FPGA integrating ProASIC3 FPGA fabric, programmable analog block, support for ARM® Cortex™-M1 soft processors, and flash memory into a monolithic device |

*Note: *The device names link to the appropriate datasheet, including product brief, DC and switching characteristics, and packaging information.*

## *IGLOO Terminology*

In documentation, the terms IGLOO series and IGLOO devices refer to all of the IGLOO devices as listed in Table 14-1. Where the information applies to only one device or limited devices, these exclusions will be explicitly stated.

## *ProASIC3 Terminology*

In documentation, the terms ProASIC3 series and ProASIC3 devices refer to all of the ProASIC3 devices as listed in Table 14-1. Where the information applies to only one device or limited devices, these exclusions will be explicitly stated.

To further understand the differences between the IGLOO and ProASIC3 devices, refer to the *Industry's Lowest Power FPGAs Portfolio*.

# Programming Algorithm

## JTAG Interface

The low power flash families are fully compliant with the IEEE 1149.1 (JTAG) standard. They support all the mandatory boundary scan instructions (EXTEST, SAMPLE/PRELOAD, and BYPASS) as well as six optional public instructions (USERCODE, IDCODE, HIGHZ, and CLAMP).

## IEEE 1532

The low power flash families are also fully compliant with the IEEE 1532 programming standard. The IEEE 1532 standard adds programming instructions and associated data registers to devices that comply with the IEEE 1149.1 standard (JTAG). These instructions and registers extend the capabilities of the IEEE 1149.1 standard such that the Test Access Port (TAP) can be used for configuration activities. The IEEE 1532 standard greatly simplifies the programming algorithm, reducing the amount of time needed to implement microprocessor ISP.

# Implementation Overview

To implement device programming with a microprocessor, the user should first download the C-based STAPL player or DirectC code from the Microsemi SoC Products Group website. Refer to the website for future updates regarding the STAPL player and DirectC code.

http://www.microsemi.com/soc/download/program_debug/stapl/default.aspx

http://www.microsemi.com/soc/download/program_debug/directc/default.aspx

Using the easy-to-follow user's guide, create the low-level application programming interface (API) to provide the necessary basic functions. These API functions act as the interface between the programming software and the actual hardware (Figure 14-2).

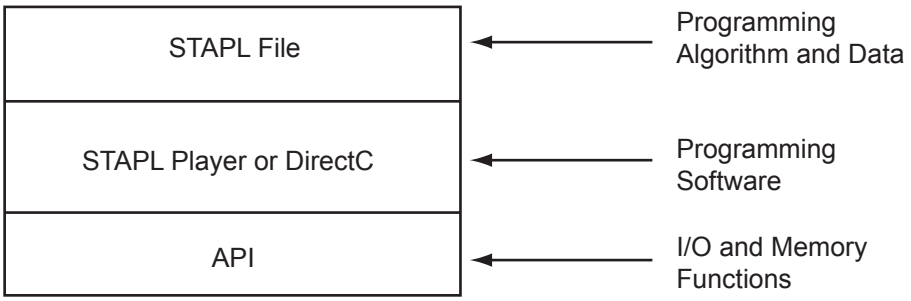


***Figure 14-2*** **• Device Programming Code Relationship**

The API is then linked with the STAPL player or DirectC and compiled using the microprocessor's compiler. Once the entire code is compiled, the user must download the resulting binary into the MCU system's program memory (such as ROM, EEPROM, or flash). The system is now ready for programming.

To program a design into the FPGA, the user creates a bitstream or STAPL file using the Microsemi Designer software, downloads it into the MCU system's volatile memory, and activates the stored programming binary file (Figure 14-3 on page 286). Once the programming is completed, the bitstream or STAPL file can be removed from the system, as the configuration profile is stored in the flash FPGA fabric and does not need to be reloaded at every system power-on.

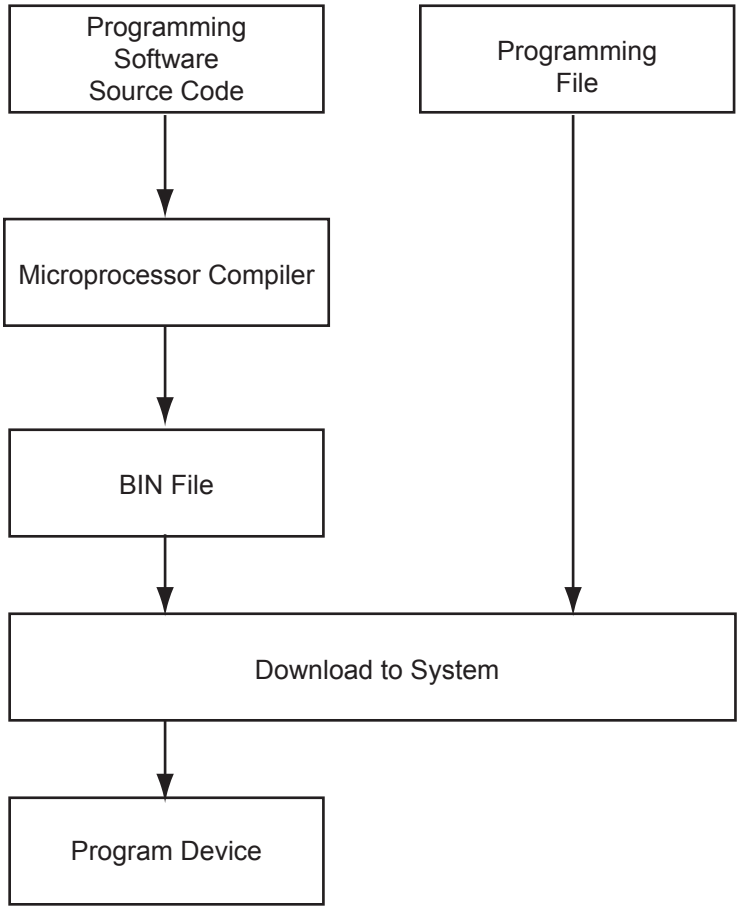


***Figure 14-3*** **• MCU FPGA Programming Model**

## FlashROM

Microsemi low power flash devices have 1 kbit of user-accessible, nonvolatile, FlashROM on-chip. This nonvolatile FlashROM can be programmed along with the core or on its own using the standard IEEE 1532 JTAG programming interface.

The FlashROM is architected as eight pages of 128 bits. Each page can be individually programmed (erased and written). Additionally, on-chip AES security decryption can be used selectively to load data securely into the FlashROM (e.g., over public or private networks, such as the Internet). Refer to the "FlashROM in Microsemi's Low Power Flash Devices" section on page 117.

## STAPL vs. DirectC

Programming the low power flash devices is performed using DirectC or the STAPL player. Both tools use the STAPL file as an input. DirectC is a compiled language, whereas STAPL is an interpreted language. Microprocessors will be able to load the FPGA using DirectC much more quickly than STAPL. This speed advantage becomes more apparent when lower clock speeds of 8- or 16-bit microprocessors are used. DirectC also requires less memory than STAPL, since the programming algorithm is directly implemented. STAPL does have one advantage over DirectC—the ability to upgrade. When a new programming algorithm is required, the STAPL user simply needs to regenerate a STAPL file using the latest version of the Designer software and download it to the system. The DirectC user must download the latest version of DirectC from Microsemi, compile everything, and download the result into the system (Figure 14-4).

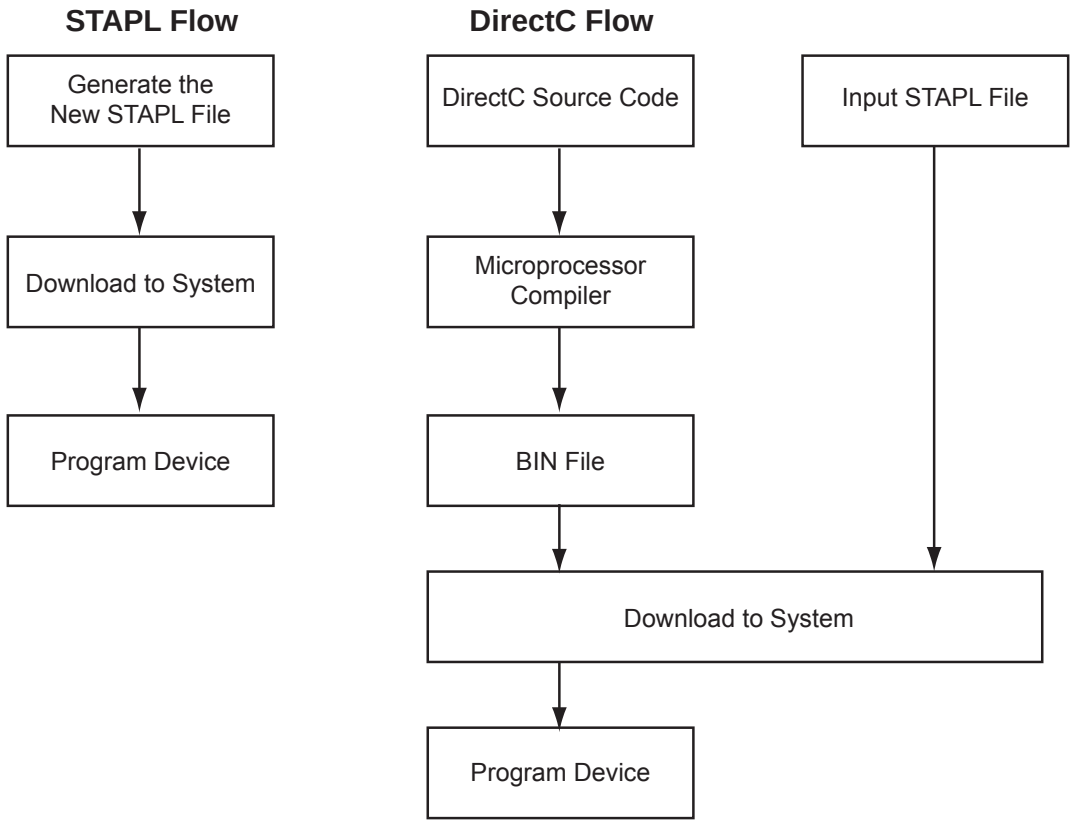


***Figure 14-4*** **• STAPL vs. DirectC**

### Remote Upgrade via TCP/IP

Transmission Control Protocol (TCP) provides a reliable bitstream transfer service between two endpoints on a network. TCP depends on Internet Protocol (IP) to move packets around the network on its behalf. TCP protects against data loss, data corruption, packet reordering, and data duplication by adding checksums and sequence numbers to transmitted data and, on the receiving side, sending back packets and acknowledging the receipt of data.

The system containing the low power flash device can be assigned an IP address when deployed in the field. When the device requires an update (core or FlashROM), the programming instructions along with the new programming data (AES-encrypted cipher text) can be sent over the Internet to the target system via the TCP/IP protocol. Once the MCU receives the instruction and data, it can proceed with the FPGA update. Low power flash devices support Message Authentication Code (MAC), which can be used to validate data for the target device. More details are given in the "Message Authentication Code (MAC) Validation/Authentication" section.

## Hardware Requirement

To facilitate the programming of the low power flash families, the system must have a microprocessor (with access to the device JTAG pins) to process the programming algorithm, memory to store the programming algorithm, programming data, and the necessary programming voltage. Refer to the relevant datasheet for programming voltages.

## Security

### Encrypted Programming

As an additional security measure, the devices are equipped with AES decryption. AES works in two steps. The first step is to program a key into the devices in a secure or trusted programming center (such as Microsemi SoC Products Group In-House Programming (IHP) center). The second step is to encrypt any programming files with the same encryption key. The encrypted programming file will only work with the devices that have the same key. The AES used in the low power flash families is the 128-bit AES decryption engine (Rijndael algorithm).

### Message Authentication Code (MAC) Validation/Authentication

As part of the AES decryption flow, the devices are equipped with a MAC validation/authentication system. MAC is an authentication tag, also called a checksum, derived by applying an on-chip authentication scheme to a STAPL file as it is loaded into the FPGA. MACs are computed and verified with the same key so they can only be verified by the intended recipient. When the MCU system receives the AES-encrypted programming data (cipher text), it can validate the data by loading it into the FPGA and performing a MAC verification prior to loading the data, via a second programming pass, into the FPGA core cells. This prevents erroneous or corrupt data from getting into the FPGA.

Low power flash devices with AES and MAC are superior to devices with only DES or 3DES encryption. Because the MAC verifies the correctness of the data, the FPGA is protected from erroneous loading of invalid programming data that could damage a device (Figure 14-5 on page 289).

The AES with MAC enables field updates over public networks without fear of having the design stolen. An encrypted programming file can only work on devices with the correct key, rendering any stolen files

useless to the thief. To learn more about the low power flash devices' security features, refer to the "Security in Low Power Flash Devices" section on page 235.

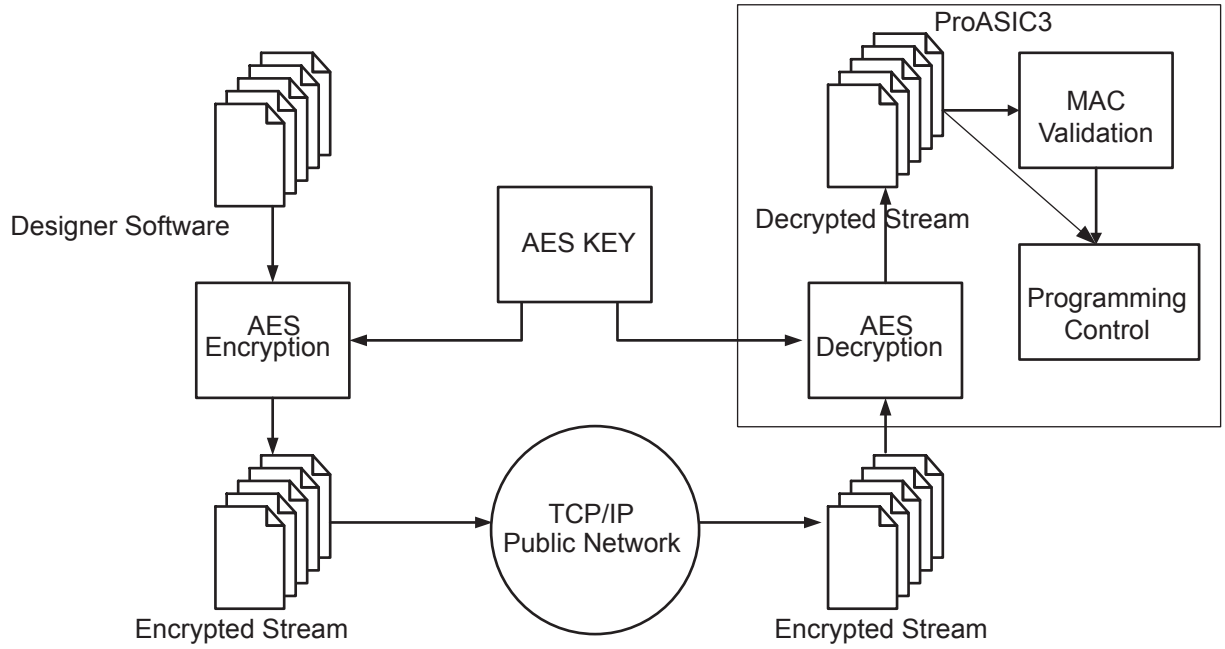


***Figure 14-5* • ProASIC3 Device Encryption Flow**

# Conclusion

The Fusion, IGLOO, and ProASIC3 FPGAs are ideal for applications that require field upgrades. The single-chip devices save board space by eliminating the need for EEPROM. The built-in AES with MAC enables transmission of programming data over any network without fear of design theft. Fusion, IGLOO, and ProASIC3 FPGAs are IEEE 1532–compliant and support STAPL, making the target programming software easy to implement.

# List of Changes

The following table lists critical changes that were made in each revision of the chapter.

| Date | Changes | Page |
|---|---|---|
| September 2012 | The "Security" section was modified to clarify that Microsemi does not support read-back of FPGA core-programmed data (SAR 41235). | 288 |
| July 2010 | This chapter is no longer published separately with its own part number and version but is now part of several FPGA fabric user's guides. | N/A |
| v1.4<br>(December 2008) | IGLOO nano and ProASIC3 nano devices were added to Table 14-1 • Flash-Based FPGAs. | 284 |
| v1.3<br>(October 2008) | The "Microprocessor Programming Support in Flash Devices" section was revised to include new families and make the information more concise. | 284 |
| v1.2<br>(June 2008) | The following changes were made to the family descriptions in Table 14-1 • Flash-Based FPGAs:<br>• ProASIC3L was updated to include 1.5 V.<br>• The number of PLLs for ProASIC3E was changed from five to six. | 284 |
| v1.1<br>(March 2008) | The "Microprocessor Programming Support in Flash Devices" section was updated to include information on the IGLOO PLUS family. The "IGLOO Terminology" section and "ProASIC3 Terminology" section are new. | 284 |

# 15 – Boundary Scan in Low Power Flash Devices

## Boundary Scan

Low power flash devices are compatible with IEEE Standard 1149.1, which defines a hardware architecture and the set of mechanisms for boundary scan testing. JTAG operations are used during boundary scan testing.

The basic boundary scan logic circuit is composed of the TAP controller, test data registers, and instruction register (Figure 15-2 on page 294).

Low power flash devices support three types of test data registers: bypass, device identification, and boundary scan. The bypass register is selected when no other register needs to be accessed in a device. This speeds up test data transfer to other devices in a test data path. The 32-bit device identification register is a shift register with four fields (LSB, ID number, part number, and version). The boundary scan register observes and controls the state of each I/O pin. Each I/O cell has three boundary scan register cells, each with serial-in, serial-out, parallel-in, and parallel-out pins.

## TAP Controller State Machine

The TAP controller is a 4-bit state machine (16 states) that operates as shown in Figure 15-1.

The 1s and 0s represent the values that must be present on TMS at a rising edge of TCK for the given state transition to occur. IR and DR indicate that the instruction register or the data register is operating in that state.

The TAP controller receives two control inputs (TMS and TCK) and generates control and clock signals for the rest of the test logic architecture. On power-up, the TAP controller enters the Test-Logic-Reset state. To guarantee a reset of the controller from any of the possible states, TMS must remain HIGH for five TCK cycles. The TRST pin can also be used to asynchronously place the TAP controller in the Test-Logic-Reset state.

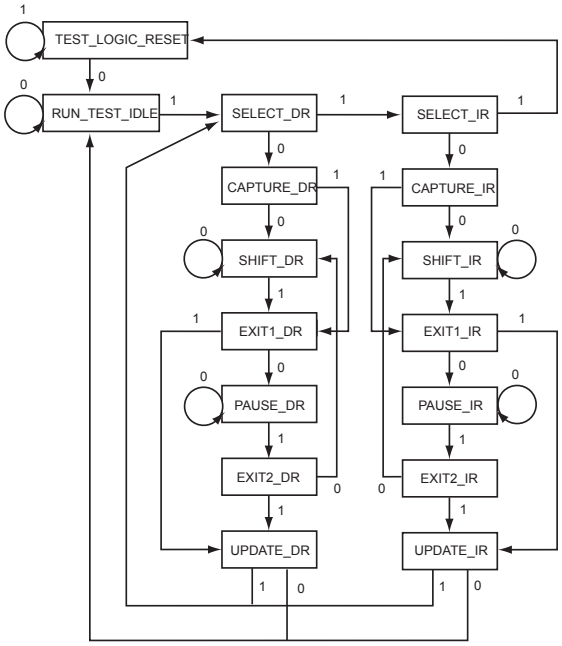


***Figure 15-1*** **• TAP Controller State Machine**

# Microsemi's Flash Devices Support the JTAG Feature

The flash-based FPGAs listed in Table 15-1 support the JTAG feature and the functions described in this document.

***Table 15-1* • Flash-Based FPGAs**

| Series | Family* | Description |
|---|---|---|
| IGLOO | IGLOO | Ultra-low power 1.2 V to 1.5 V FPGAs with Flash*Freeze technology |
| | IGLOOe | Higher density IGLOO FPGAs with six PLLs and additional I/O standards |
| | IGLOO nano | The industry's lowest-power, smallest-size solution |
| | IGLOO PLUS | IGLOO FPGAs with enhanced I/O capabilities |
| ProASIC3 | ProASIC3 | Low power, high-performance 1.5 V FPGAs |
| | ProASIC3E | Higher density ProASIC3 FPGAs with six PLLs and additional I/O standards |
| | ProASIC3 nano | Lowest-cost solution with enhanced I/O capabilities |
| | ProASIC3L | ProASIC3 FPGAs supporting 1.2 V to 1.5 V with Flash*Freeze technology |
| | RT ProASIC3 | Radiation-tolerant RT3PE600L and RT3PE3000L |
| | Military ProASIC3/EL | Military temperature A3PE600L, A3P1000, and A3PE3000L |
| | Automotive ProASIC3 | ProASIC3 FPGAs qualified for automotive applications |
| Fusion | Fusion | Mixed signal FPGA integrating ProASIC®3 FPGA fabric, programmable analog block, support for ARM® Cortex™-M1 soft processors, and flash memory into a monolithic device |

*Note: *The device names link to the appropriate datasheet, including product brief, DC and switching characteristics, and packaging information.*

## *IGLOO Terminology*

In documentation, the terms IGLOO series and IGLOO devices refer to all of the IGLOO devices as listed in Table 15-1. Where the information applies to only one product line or limited devices, these exclusions will be explicitly stated.

## *ProASIC3 Terminology*

In documentation, the terms ProASIC3 series and ProASIC3 devices refer to all of the ProASIC3 devices as listed in Table 15-1. Where the information applies to only one product line or limited devices, these exclusions will be explicitly stated.

To further understand the differences between the IGLOO and ProASIC3 devices, refer to the *Industry's Lowest Power FPGAs Portfolio*.

# Boundary Scan Support in Low Power Devices

The information in this document applies to all Fusion, IGLOO, and ProASIC3 devices. For IGLOO, IGLOO PLUS, and ProASIC3L devices, the Flash*Freeze pin must be deasserted for successful boundary scan operations. Devices cannot enter JTAG mode directly from Flash*Freeze mode.

# Boundary Scan Opcodes

Low power flash devices support all mandatory IEEE 1149.1 instructions (EXTEST, SAMPLE/PRELOAD, and BYPASS) and the optional IDCODE instruction (Table 15-2).

***Table 15-2* • Boundary Scan Opcodes**

| | Hex Opcode |
|---|---|
| EXTEST | 00 |
| HIGHZ | 07 |
| USERCODE | 0E |
| SAMPLE/PRELOAD | 01 |
| IDCODE | 0F |
| CLAMP | 05 |
| BYPASS | FF |

# Boundary Scan Chain

The serial pins are used to serially connect all the boundary scan register cells in a device into a boundary scan register chain (Figure 15-2 on page 294), which starts at the TDI pin and ends at the TDO pin. The parallel ports are connected to the internal core logic I/O tile and the input, output, and control ports of an I/O buffer to capture and load data into the register to control or observe the logic state of each I/O.

Each test section is accessed through the TAP, which has five associated pins: TCK (test clock input), TDI, TDO (test data input and output), TMS (test mode selector), and TRST (test reset input). TMS, TDI, and TRST are equipped with pull-up resistors to ensure proper operation when no input data is supplied to them. These pins are dedicated for boundary scan test usage. Refer to the "JTAG Pins" section in the "Pin Descriptions and Packaging" chapter of the appropriate device datasheet for pull-up/-down recommendations for TCK and TRST pins. Pull-down recommendations are also given in Table 15-3 on page 294

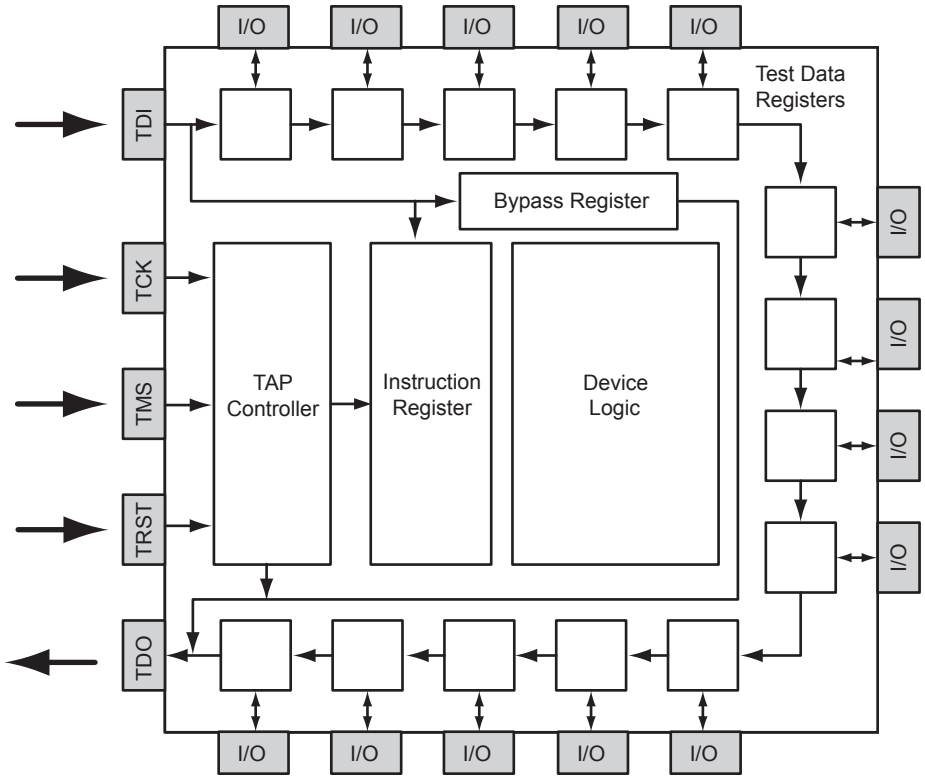


***Figure 15-2*** **• Boundary Scan Chain**

# Board-Level Recommendations

Table 15-3 gives pull-down recommendations for the TRST and TCK pins.

***Table 15-3*** **• TRST and TCK Pull-Down Recommendations**

| VJTAG | Tie-Off Resistance* |
|---|---|
| VJTAG at 3.3 V | 200 Ω to 1 kΩ |
| VJTAG at 2.5 V | 200 Ω to 1 kΩ |
| VJTAG at 1.8 V | 500 Ω to 1 kΩ |
| VJTAG at 1.5 V | 500 Ω to 1 kΩ |
| VJTAG at 1.2 V | TBD |

*Note: Equivalent parallel resistance if more than one device is on JTAG chain (Figure 15-3)*

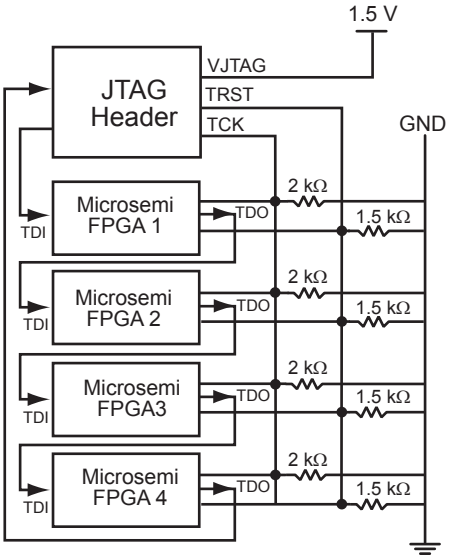


*Note: TCK is correctly wired with an equivalent tie-off resistance of 500 Ω, which satisfies the table for VJTAG of 1.5 V. The resistor values for TRST are not appropriate in this case, as the tie-off resistance of 375 Ω is below the recommended minimum for VJTAG = 1.5 V, but would be appropriate for a VJTAG setting of 2.5 V or 3.3 V.*

***Figure 15-3* • Parallel Resistance on JTAG Chain of Devices**

# Advanced Boundary Scan Register Settings

You will not be able to control the order in which I/Os are released from boundary scan control. Testing has produced cases where, depending on I/O placement and FPGA routing, a 5 ns glitch has been seen on exiting programming mode. The following setting is recommended to prevent such I/O glitches:

1. In the FlashPro software, configure the advanced BSR settings for **Specify I/O Settings During Programming**.
2. Set the input BSR cell to **Low** for the input I/O.

# List of Changes

The following table lists critical changes that were made in each revision of the chapter.

| Date | Changes | Page |
|---|---|---|
| August 2012 | In the "Boundary Scan Chain" section, the reference made to the datasheet for pull-up/-down recommendations was changed to mention TCK and TRST pins rather than TDO and TCK pins. TDO is an output, so no pull resistor is needed (SAR 35937). | 293 |
| | The "Advanced Boundary Scan Register Settings" section is new (SAR 38432). | 295 |
| July 2010 | This chapter is no longer published separately with its own part number and version but is now part of several FPGA fabric user's guides. | N/A |
| | Table 15-3 • TRST and TCK Pull-Down Recommendations was revised to add VJTAG at 1.2 V. | 294 |
| v1.4<br>(December 2008) | IGLOO nano and ProASIC3 nano devices were added to Table 15-1 • Flash-Based FPGAs. | 292 |
| v1.3<br>(October 2008) | The "Boundary Scan Support in Low Power Devices" section was revised to include new families and make the information more concise. | 293 |
| v1.2<br>(June 2008) | The following changes were made to the family descriptions in Table 15-1 • Flash-Based FPGAs:<br>• ProASIC3L was updated to include 1.5 V.<br>• The number of PLLs for ProASIC3E was changed from five to six. | 292 |
| v1.1<br>(March 2008) | The chapter was updated to include the IGLOO PLUS family and information regarding 15 k gate devices. | N/A |
| | The "IGLOO Terminology" section and "ProASIC3 Terminology" section are new. | 292 |

# 16 – UJTAG Applications in Microsemi's Low Power Flash Devices

## Introduction

In Fusion, IGLOO, and ProASIC3 devices, there is bidirectional access from the JTAG port to the core VersaTiles during normal operation of the device (Figure 16-1). User JTAG (UJTAG) is the ability for the design to use the JTAG ports for access to the device for updates, etc. While regular JTAG is used, the UJTAG tiles, located at the southeast area of the die, are directly connected to the JTAG Test Access Port (TAP) Controller in normal operating mode. As a result, all the functional blocks of the device, such as Clock Conditioning Circuits (CCCs) with PLLs, SRAM blocks, embedded FlashROM, flash memory blocks, and I/O tiles, can be reached via the JTAG ports. The UJTAG functionality is available by instantiating the UJTAG macro directly in the source code of a design. Access to the FPGA core VersaTiles from the JTAG ports enables users to implement different applications using the TAP Controller (JTAG port). This document introduces the UJTAG tile functionality and discusses a few application examples. However, the possible applications are not limited to what is presented in this document. UJTAG can serve different purposes in many designs as an elementary or auxiliary part of the design. For detailed usage information, refer to the "Boundary Scan in Low Power Flash Devices" section on page 291.

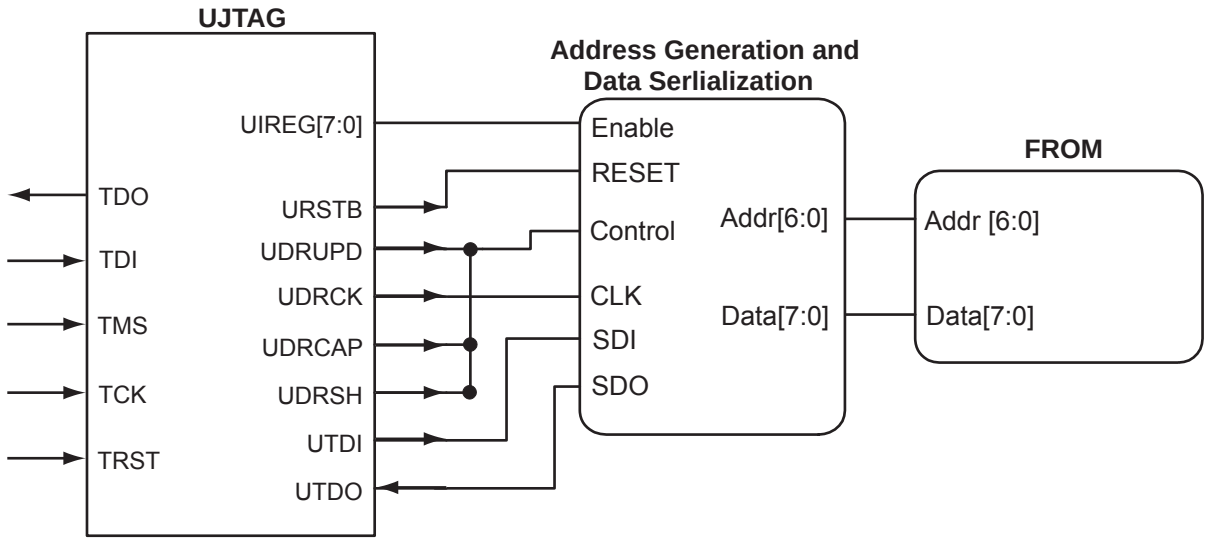


***Figure 16-1*** **• Block Diagram of Using UJTAG to Read FlashROM Contents**

# UJTAG Support in Flash-Based Devices

The flash-based FPGAs listed in Table 16-1 support the UJTAG feature and the functions described in this document.

***Table 16-1* • Flash-Based FPGAs**

| Series | Family* | Description |
|---|---|---|
| IGLOO | IGLOO | Ultra-low power 1.2 V to 1.5 V FPGAs with Flash*Freeze technology |
| | IGLOOe | Higher density IGLOO FPGAs with six PLLs and additional I/O standards |
| | IGLOO nano | The industry's lowest-power, smallest-size solution |
| | IGLOO PLUS | IGLOO FPGAs with enhanced I/O capabilities |
| ProASIC3 | ProASIC3 | Low power, high-performance 1.5 V FPGAs |
| | ProASIC3E | Higher density ProASIC3 FPGAs with six PLLs and additional I/O standards |
| | ProASIC3 nano | Lowest-cost solution with enhanced I/O capabilities |
| | ProASIC3L | ProASIC3 FPGAs supporting 1.2 V to 1.5 V with Flash*Freeze technology |
| | RT ProASIC3 | Radiation-tolerant RT3PE600L and RT3PE3000L |
| | Military ProASIC3/EL | Military temperature A3PE600L, A3P1000, and A3PE3000L |
| | Automotive ProASIC3 | ProASIC3 FPGAs qualified for automotive applications |
| Fusion | Fusion | Mixed signal FPGA integrating ProASIC3 FPGA fabric, programmable analog block, support for ARM® Cortex™-M1 soft processors, and flash memory into a monolithic device |

*Note: *The device names link to the appropriate datasheet, including product brief, DC and switching characteristics, and packaging information.*

## *IGLOO Terminology*

In documentation, the terms IGLOO series and IGLOO devices refer to all of the IGLOO devices as listed in Table 16-1. Where the information applies to only one product line or limited devices, these exclusions will be explicitly stated.

## *ProASIC3 Terminology*

In documentation, the terms ProASIC3 series and ProASIC3 devices refer to all of the ProASIC3 devices as listed in Table 16-1. Where the information applies to only one product line or limited devices, these exclusions will be explicitly stated.

To further understand the differences between the IGLOO and ProASIC3 devices, refer to the *Industry's Lowest Power FPGAs Portfolio*.

# UJTAG Macro

The UJTAG tiles can be instantiated in a design using the UJTAG macro from the Fusion, IGLOO, or ProASIC3 macro library. Note that "UJTAG" is a reserved name and cannot be used for any other user-defined blocks. A block symbol of the UJTAG tile macro is presented in Figure 16-2. In this figure, the ports on the left side of the block are connected to the JTAG TAP Controller, and the right-side ports are accessible by the FPGA core VersaTiles. The TDI, TMS, TDO, TCK, and TRST ports of UJTAG are only provided for design simulation purposes and should be treated as external signals in the design netlist. However, these ports must NOT be connected to any I/O buffer in the netlist. Figure 16-3 on page 300 illustrates the correct connection of the UJTAG macro to the user design netlist. Microsemi Designer software will automatically connect these ports to the TAP during place-and-route. Table 16-2 gives the port descriptions for the rest of the UJTAG ports:

***Table 16-2* • UJTAG Port Descriptions**

| Port | Description |
|---|---|
| UIREG [7:0] | This 8-bit bus carries the contents of the JTAG Instruction Register of each device. Instruction Register values 16 to 127 are not reserved and can be employed as user-defined instructions. |
| URSTB | URSTB is an active-low signal and will be asserted when the TAP Controller is in Test-Logic-Reset mode. URSTB is asserted at power-up, and a power-on reset signal resets the TAP Controller. URSTB will stay asserted until an external TAP access changes the TAP Controller state. |
| UTDI | This port is directly connected to the TAP's TDI signal. |
| UTDO | This port is the user TDO output. Inputs to the UTDO port are sent to the TAP TDO output MUX when the IR address is in user range. |
| UDRSH | Active-high signal enabled in the ShiftDR TAP state |
| UDRCAP | Active-high signal enabled in the CaptureDR TAP state |
| UDRCK | This port is directly connected to the TAP's TCK signal. |
| UDRUPD | Active-high signal enabled in the UpdateDR TAP state |

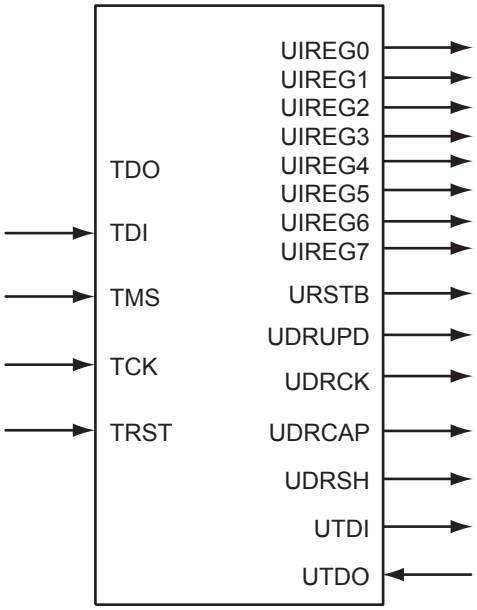


***Figure 16-2* • UJTAG Tile Block Symbol**

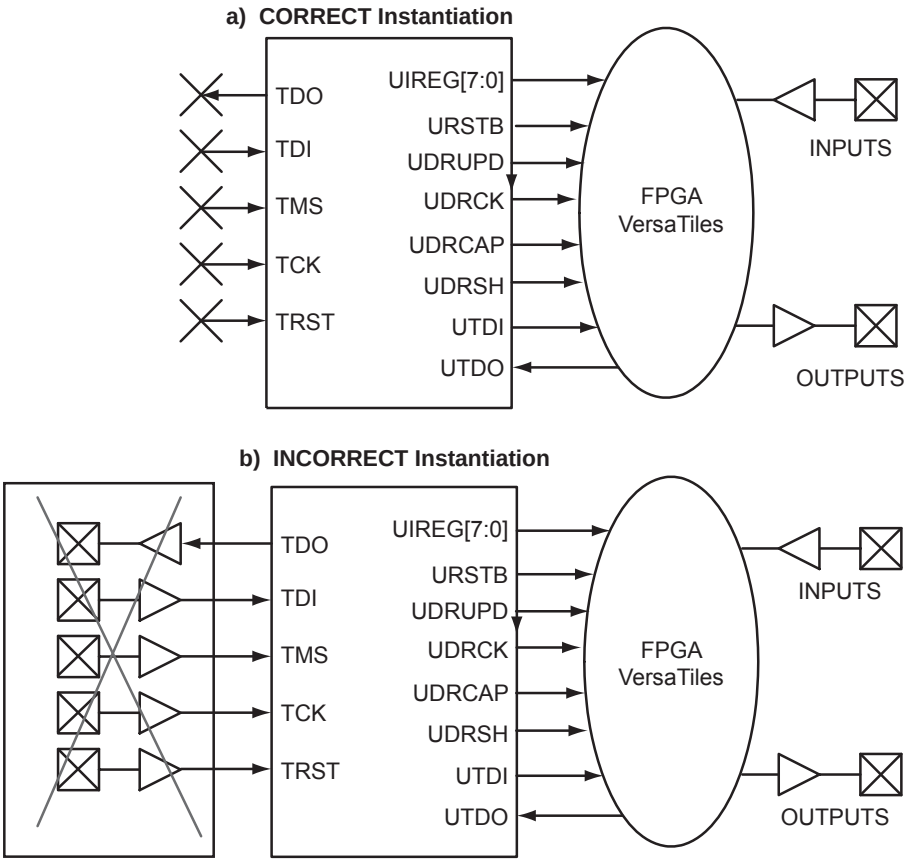


*Note: Do not connect JTAG pins (TDO, TDI, TMS, TCK, or TRST) to I/Os in the design.*

***Figure 16-3* • Connectivity Method of UJTAG Macro**

# UJTAG Operation

There are a few basic functions of the UJTAG macro that users must understand before designing with it. The most important fundamental concept of the UJTAG design is its connection with the TAP Controller state machine.

## TAP Controller State Machine

The 16 states of the TAP Controller state machine are shown in Figure 16-4 on page 301. The 1s and 0s, shown adjacent to the state transitions, represent the TMS values that must be present at the time of a rising TCK edge for a state transition to occur. In the states that include the letters "IR," the instruction register operates; in the states that contain the letters "DR," the test data register operates. The TAP Controller receives two control inputs, TMS and TCK, and generates control and clock signals for the rest of the test logic.

On power-up (or the assertion of TRST), the TAP Controller enters the Test-Logic-Reset state. To reset the controller from any other state, TMS must be held HIGH for at least five TCK cycles. After reset, the TAP state changes at the rising edge of TCK, based on the value of TMS.

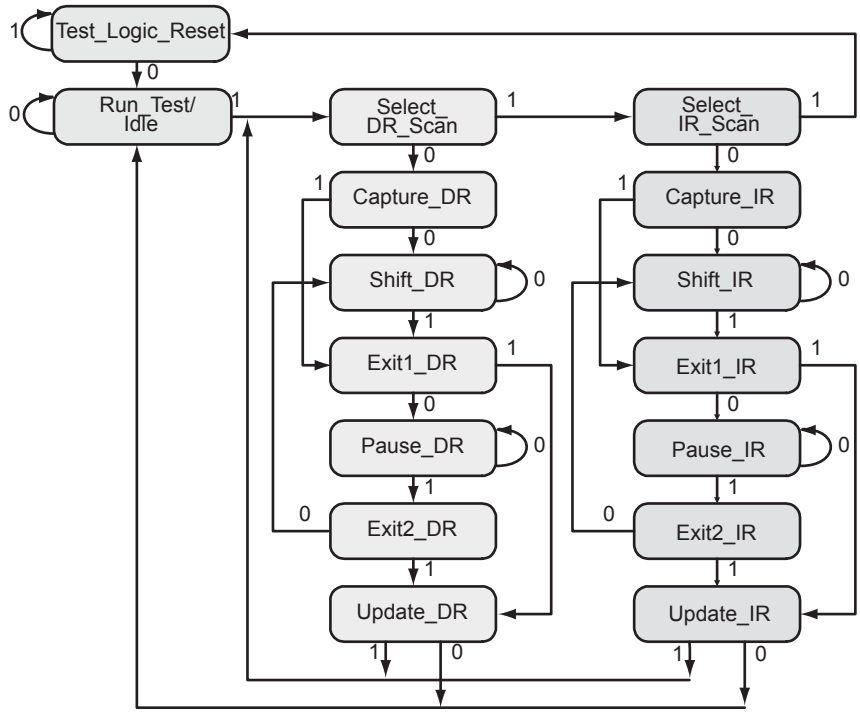


***Figure 16-4*** **• TAP Controller State Diagram**

## UJTAG Port Usage

UIREG[7:0] hold the contents of the JTAG instruction register. The UIREG vector value is updated when the TAP Controller state machine enters the Update_IR state. Instructions 16 to 127 are user-defined and can be employed to encode multiple applications and commands within an application. Loading new instructions into the UIREG vector requires users to send appropriate logic to TMS to put the TAP Controller in a full IR cycle starting from the Select IR_Scan state and ending with the Update_IR state.

UTDI, UTDO, and UDRCK are directly connected to the JTAG TDI, TDO, and TCK ports, respectively. The TDI input can be used to provide either data (TAP Controller in the Shift_DR state) or the new contents of the instruction register (TAP Controller in the Shift_IR state).

UDRSH, UDRUPD, and UDRCAP are HIGH when the TAP Controller state machine is in the Shift_DR, Update_DR, and Capture_DR states, respectively. Therefore, they act as flags to indicate the stages of the data shift process. These flags are useful for applications in which blocks of data are shifted into the design from JTAG pins. For example, an active UDRSH can indicate that UTDI contains the data bitstream, and UDRUPD is a candidate for the end-of-data-stream flag.

As mentioned earlier, users should not connect the TDI, TDO, TCK, TMS, and TRST ports of the UJTAG macro to any port or net of the design netlist. The Designer software will automatically handle the port connection.

# Typical UJTAG Applications

Bidirectional access to the JTAG port from VersaTiles—without putting the device into test mode—creates flexibility to implement many different applications. This section describes a few of these. All are based on importing/exporting data through the UJTAG tiles.

## Clock Conditioning Circuitry—Dynamic Reconfiguration

In low power flash devices, CCCs, which include PLLs, can be configured dynamically through either an 81-bit embedded shift register or static flash programming switches. These 81 bits control all the characteristics of the CCC: routing MUX architectures, delay values, divider values, etc. Table 16-3 lists the 81 configuration bits in the CCC.

***Table 16-3* • Configuration Bits of Fusion, IGLOO, and ProASIC3 CCC Blocks**

| Bit Number(s) | Control Function |
|---|---|
| 80 | RESET ENABLE |
| 79 | DYNCSEL |
| 78 | DYNBSEL |
| 77 | DYNASEL |
| <76:74> | VCOSEL [2:0] |
| 73 | STATCSEL |
| 72 | STATBSEL |
| 71 | STATASEL |
| <70:66> | DLYC [4:0] |
| <65:61> | DLYB {4:0] |
| <60:56> | DLYGLC [4:0] |
| <55:51> | DLYGLB [4:0] |
| <50:46> | DLYGLA [4:0] |
| 45 | XDLYSEL |
| <44:40> | FBDLY [4:0] |
| <39:38> | FBSEL |
| <37:35> | OCMUX [2:0] |
| <34:32> | OBMUX [2:0] |
| <31:29> | OAMUX [2:0] |
| <28:24> | OCDIV [4:0] |
| <23:19> | OBDIV [4:0] |
| <18:14> | OADIV [4:0] |
| <13:7> | FBDIV [6:0] |
| <6:0> | FINDIV [6:0] |

The embedded 81-bit shift register (for the dynamic configuration of the CCC) is accessible to the VersaTiles, which, in turn, have access to the UJTAG tiles. Therefore, the CCC configuration shift register can receive and load the new configuration data stream from JTAG.

Dynamic reconfiguration eliminates the need to reprogram the device when reconfiguration of the CCC functional blocks is needed. The CCC configuration can be modified while the device continues to operate. Employing the UJTAG core requires the user to design a module to provide the configuration data and control the CCC configuration shift register. In essence, this is a user-designed TAP Controller requiring chip resources.

Similar reconfiguration capability exists in the ProASIC$^{PLUS®}$ family. The only difference is the number of shift register bits controlling the CCC (27 in ProASIC$^{PLUS}$ and 81 in IGLOO, ProASIC3, and Fusion).

## Fine Tuning

In some applications, design constants or parameters need to be modified after programming the original design. The tuning process can be done using the UJTAG tile without reprogramming the device with new values. If the parameters or constants of a design are stored in distributed registers or embedded SRAM blocks, the new values can be shifted onto the JTAG TAP Controller pins, replacing the old values. The UJTAG tile is used as the "bridge" for data transfer between the JTAG pins and the FPGA VersaTiles or SRAM logic. Figure 16-5 shows a flow chart example for fine-tuning application steps using the UJTAG tile.

In Figure 16-5, the TMS signal sets the TAP Controller state machine to the appropriate states. The flow mainly consists of two steps: a) shifting the defined instruction and b) shifting the new data. If the target parameter is constantly used in the design, the new data can be shifted into a temporary shift register from UTDI. The UDRSH output of UJTAG can be used as a shift-enable signal, and UDRCK is the shift clock to the shift register. Once the shift process is completed and the TAP Controller state is moved to the Update_DR state, the UDRUPD output of the UJTAG can latch the new parameter value from the temporary register into a permanent location. This avoids any interruption or malfunctioning during the serial shift of the new value.

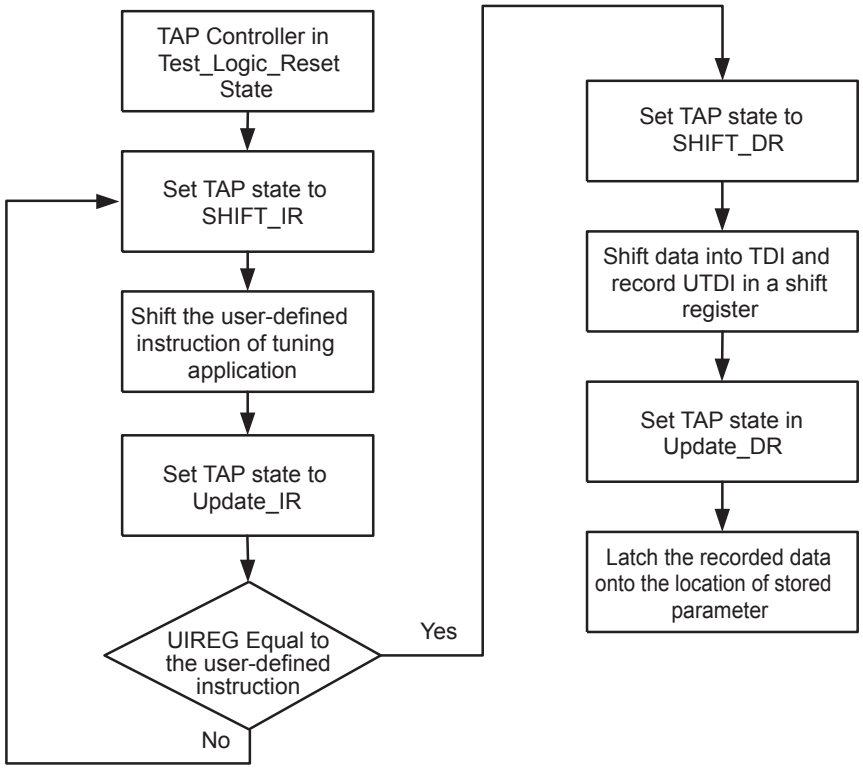


***Figure 16-5*** **• Flow Chart Example of Fine-Tuning an Application Using UJTAG**

## Silicon Testing and Debugging

In many applications, the design needs to be tested, debugged, and verified on real silicon or in the final embedded application. To debug and test the functionality of designs, users may need to monitor some internal logic (or nets) during device operation. The approach of adding design test pins to monitor the critical internal signals has many disadvantages, such as limiting the number of user I/Os. Furthermore, adding external I/Os for test purposes may require additional or dedicated board area for testing and debugging.

The UJTAG tiles of low power flash devices offer a flexible and cost-effective solution for silicon test and debug applications. In this solution, the signals under test are shifted out to the TDO pin of the TAP Controller. The main advantage is that all the test signals are monitored from the TDO pin; no pins or additional board-level resources are required. Figure 16-6 illustrates this technique. Multiple test nets are brought into an internal MUX architecture. The selection of the MUX is done using the contents of the TAP Controller instruction register, where individual instructions (values from 16 to 127) correspond to different signals under test. The selected test signal can be synchronized with the rising or falling edge of TCK (optional) and sent out to UTDO to drive the TDO output of JTAG.

For flash devices, TDO (the output) is configured as low slew and the highest drive strength available in the technology and/or device. Here are some examples:

1. If the device is A3P1000 and VCCI is 3.3 V, TDO will be configured as LVTTL 3.3 V output, 24 mA, low slew.
2. If the device is AGLN020 and VCCI is 1.8 V, TDO will be configured as LVCMOS 1.8 V output, 4 mA, low slew.
3. If the device is AGLE300 and VCCI is 2.5 V, TDO will be configured as LVCMOS 2.5 V output, 24 mA, low slew.

The test and debug procedure is not limited to the example in Figure 16-5 on page 303. Users can customize the debug and test interface to make it appropriate for their applications. For example, multiple test signals can be registered and then sent out through UTDO, each at a different edge of TCK. In other words, *n* signals are sampled with an $F_{TCK}$ / *n* sampling rate. The bandwidth of the information sent out to TDO is always proportional to the frequency of TCK.

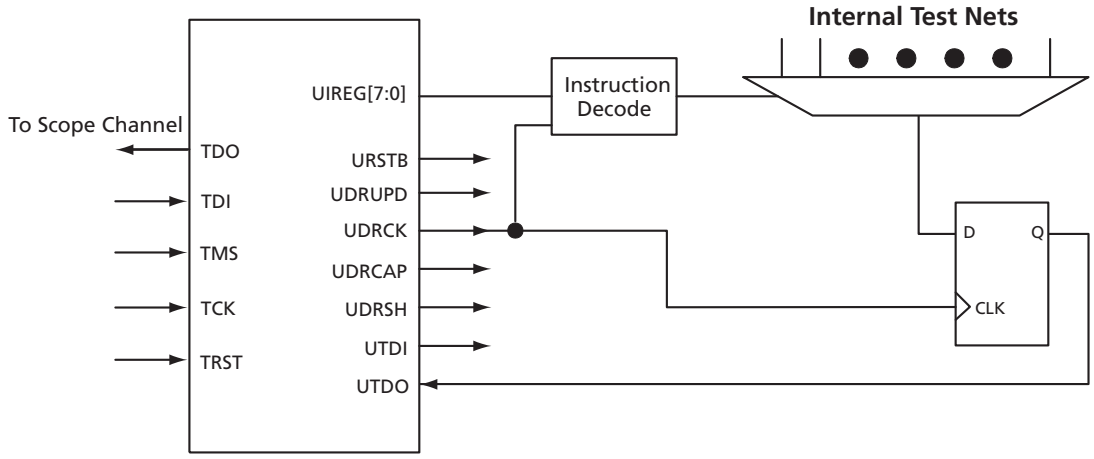


***Figure 16-6*** **• UJTAG Usage Example in Test and Debug Applications**

## SRAM Initialization

Users can also initialize embedded SRAMs of the low power flash devices. The initialization of the embedded SRAM blocks of the design can be done using UJTAG tiles, where the initialization data is imported using the TAP Controller. Similar functionality is available in ProASIC$^{PLUS}$ devices using JTAG. The guidelines for implementation and design examples are given in the *RAM Initialization and ROM Emulation in ProASIC$^{PLUS}$ Devices* application note.

SRAMs are volatile by nature; data is lost in the absence of power. Therefore, the initialization process should be done at each power-up if necessary.

## FlashROM Read-Back Using JTAG

The low power flash architecture contains a dedicated nonvolatile FlashROM block, which is formatted into eight 128-bit pages. For more information on FlashROM, refer to the "FlashROM in Microsemi's Low Power Flash Devices" section on page 117. The contents of FlashROM are available to the VersaTiles during normal operation through a read operation. As a result, the UJTAG macro can be used to provide the FlashROM contents to the JTAG port during normal operation. Figure 16-7 illustrates a simple block diagram of using UJTAG to read the contents of FlashROM during normal operation.

The FlashROM read address can be provided from outside the FPGA through the TDI input or can be generated internally using the core logic. In either case, data serialization logic is required (Figure 16-7) and should be designed using the VersaTile core logic. FlashROM contents are read asynchronously in parallel from the flash memory and shifted out in a synchronous serial format to TDO. Shifting the serial data out of the serialization block should be performed while the TAP is in UDRSH mode. The coordination between TCK and the data shift procedure can be done using the TAP state machine by monitoring UDRSH, UDRCAP, and UDRUPD.

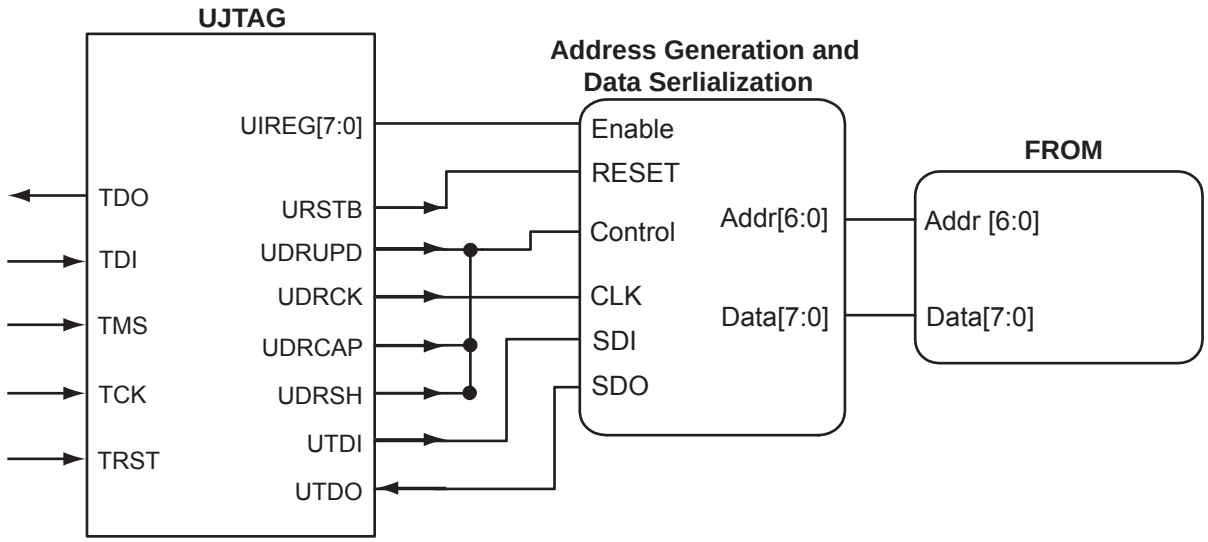


***Figure 16-7*** **• Block Diagram of Using UJTAG to Read FlashROM Contents**

# Conclusion

Microsemi low power flash FPGAs offer many unique advantages, such as security, nonvolatility, reprogrammablity, and low power—all in a single chip. In addition, Fusion, IGLOO, and ProASIC3 devices provide access to the JTAG port from core VersaTiles while the device is in normal operating mode. A wide range of available user-defined JTAG opcodes allows users to implement various types of applications, exploiting this feature of these devices. The connection between the JTAG port and core tiles is implemented through an embedded and hardwired UJTAG tile. A UJTAG tile can be instantiated in designs using the UJTAG library cell. This document presents multiple examples of UJTAG applications, such as dynamic reconfiguration, silicon test and debug, fine-tuning of the design, and RAM initialization. Each of these applications offers many useful advantages.

# Related Documents

## Application Notes

*RAM Initialization and ROM Emulation in ProASIC$^{PLUS}$ Devices*

http://www.microsemi.com/soc/documents/APA_RAM_Initd_AN.pdf

# List of Changes

The following table lists critical changes that were made in each revision of the chapter.

| Date | Changes | Page |
|---|---|---|
| December 2011 | Information on the drive strength and slew rate of TDO pins was added to the "Silicon Testing and Debugging" section (SAR 31749). | 304 |
| July 2010 | This chapter is no longer published separately with its own part number and version but is now part of several FPGA fabric user's guides. | N/A |
| v1.4<br>(December 2008) | IGLOO nano and ProASIC3 nano devices were added to Table 16-1 • Flash-Based FPGAs. | 298 |
| v1.3<br>(October 2008) | The "UJTAG Support in Flash-Based Devices" section was revised to include new families and make the information more concise. | 298 |
| | The title of Table 16-3 • Configuration Bits of Fusion, IGLOO, and ProASIC3 CCC Blocks was revised to include Fusion. | 302 |
| v1.2<br>(June 2008) | The following changes were made to the family descriptions in Table 16-1 • Flash-Based FPGAs:<br>• ProASIC3L was updated to include 1.5 V.<br>• The number of PLLs for ProASIC3E was changed from five to six. | 298 |
| v1.1<br>(March 2008) | The chapter was updated to include the IGLOO PLUS family and information regarding 15 k gate devices. | N/A |
| | The "IGLOO Terminology" section and "ProASIC3 Terminology" section are new. | 298 |

# 17 – Power-Up/-Down Behavior of Low Power Flash Devices

## Introduction

Microsemi’s low power flash devices are flash-based FPGAs manufactured on a 0.13 µm process node. These devices offer a single-chip, reprogrammable solution and support Level 0 live at power-up (LAPU) due to their nonvolatile architecture.

Microsemi's low power flash FPGA families are optimized for logic area, I/O features, and performance. IGLOO® devices are optimized for power, making them the industry's lowest power programmable solution. IGLOO PLUS FPGAs offer enhanced I/O features beyond those of the IGLOO ultra-low power solution for I/O-intensive low power applications. IGLOO nano devices are the industry's lowest-power cost-effective solution. ProASIC3®L FPGAs balance low power with high performance. The ProASIC3 family is Microsemi's high-performance flash FPGA solution. ProASIC3 nano devices offer the lowest-cost solution with enhanced I/O capabilities.

Microsemi’s low power flash devices exhibit very low transient current on each power supply during power-up. The peak value of the transient current depends on the device size, temperature, voltage levels, and power-up sequence.

The following devices can have inputs driven in while the device is not powered:

- IGLOO (AGL015 and AGL030)
- IGLOO nano (all devices)
- IGLOO PLUS (AGLP030, AGLP060, AGLP125)
- IGLOOe (AGLE600, AGLE3000)
- ProASIC3L (A3PE3000L)
- ProASIC3 (A3P015, A3P030)
- ProASIC3 nano (all devices)
- ProASIC3E (A3PE600, A3PE1500, A3PE3000)
- Military ProASIC3EL (A3PE600L, A3PE3000L, but not A3P1000)
- RT ProASIC3 (RT3PE600L, RT3PE3000L)

The driven I/Os do not pull up power planes, and the current draw is limited to very small leakage current, making them suitable for applications that require cold-sparing. These devices are hot-swappable, meaning they can be inserted in a live power system.[1]

1. *For more details on the levels of hot-swap compatibility in Microsemi’s low power flash devices, refer to the "Hot-Swap Support" section in the I/O Structures chapter of the FPGA fabric user’s guide for the device you are using.*

# Flash Devices Support Power-Up Behavior

The flash FPGAs listed in Table 17-1 support power-up behavior and the functions described in this document.

***Table 17-1* • Flash-Based FPGAs**

| Series | Family* | Description |
|---|---|---|
| IGLOO | IGLOO | Ultra-low power 1.2 V to 1.5 V FPGAs with Flash*Freeze technology |
| | IGLOOe | Higher density IGLOO FPGAs with six PLLs and additional I/O standards |
| | IGLOO nano | The industry's lowest-power, smallest-size solution |
| | IGLOO PLUS | IGLOO FPGAs with enhanced I/O capabilities |
| ProASIC3 | ProASIC3 | Low power, high-performance 1.5 V FPGAs |
| | ProASIC3E | Higher density ProASIC3 FPGAs with six PLLs and additional I/O standards |
| | ProASIC3 nano | Lowest-cost solution with enhanced I/O capabilities |
| | ProASIC3L | ProASIC3 FPGAs supporting 1.2 V to 1.5 V with Flash*Freeze technology |
| | RT ProASIC3 | Radiation-tolerant RT3PE600L and RT3PE3000L |
| | Military ProASIC3/EL | Military temperature A3PE600L, A3P1000, and A3PE3000L |
| | Automotive ProASIC3 | ProASIC3 FPGAs qualified for automotive applications |

*Note: *The device names link to the appropriate datasheet, including product brief, DC and switching characteristics, and packaging information.*

## *IGLOO Terminology*

In documentation, the terms IGLOO series and IGLOO devices refer to all of the IGLOO devices as listed in Table 17-1. Where the information applies to only one product line or limited devices, these exclusions will be explicitly stated.

## *ProASIC3 Terminology*

In documentation, the terms ProASIC3 series and ProASIC3 devices refer to all of the ProASIC3 devices as listed in Table 17-1. Where the information applies to only one product line or limited devices, these exclusions will be explicitly stated.

To further understand the differences between the IGLOO and ProASIC3 devices, refer to the *Industry's Lowest Power FPGAs Portfolio*.

# Power-Up/-Down Sequence and Transient Current

Microsemi's low power flash devices use the following main voltage pins during normal operation:[2]

- VCCPLX
- VJTAG
- VCC: Voltage supply to the FPGA core
  - VCC is 1.5 V ± 0.075 V for IGLOO, IGLOO nano, IGLOO PLUS, and ProASIC3 devices operating at 1.5 V.
  - VCC is 1.2 V ± 0.06 V for IGLOO, IGLOO nano, IGLOO PLUS, and ProASIC3L devices operating at 1.2 V.
  - V5 devices will require a 1.5 V VCC supply, whereas V2 devices can utilize either a 1.2 V or 1.5 V VCC.
- VCCIBx: Supply voltage to the bank's I/O output buffers and I/O logic. Bx is the I/O bank number.
- VMVx: Quiet supply voltage to the input buffers of each I/O bank. x is the bank number. (Note: IGLOO nano, IGLOO PLUS, and ProASIC3 nano devices do not have VMVx supply pins.)

The I/O bank VMV pin must be tied to the VCCI pin within the same bank. Therefore, the supplies that need to be powered up/down during normal operation are VCC and VCCI. These power supplies can be powered up/down in any sequence during normal operation of IGLOO, IGLOO nano, IGLOO PLUS, ProASIC3L, ProASIC3, and ProASIC3 nano FPGAs. During power-up, I/Os in each bank will remain tristated until the last supply (either VCCIBx or VCC) reaches its functional activation voltage. Similarly, during power-down, I/Os of each bank are tristated once the first supply reaches its brownout deactivation voltage.

Although Microsemi's low power flash devices have no power-up or power-down sequencing requirements, Microsemi identifies the following power conditions that will result in higher than normal transient current. Use this information to help maximize power savings:

Microsemi recommends tying VCCPLX to VCC and using proper filtering circuits to decouple VCC noise from the PLL.

a. If VCCPLX is powered up before VCC, a static current of up to 5 mA (typical) per PLL may be measured on VCCPLX.

   The current vanishes as soon as VCC reaches the VCCPLX voltage level.

   The same current is observed at power-down (VCC before VCCPLX).

b. If VCCPLX is powered up simultaneously or after VCC:

   i. Microsemi's low power flash devices exhibit very low transient current on VCC. For ProASIC3 devices, the maximum transient current on $V_{CC}$ does not exceed the maximum standby current specified in the device datasheet.

The source of transient current, also known as inrush current, varies depending on the FPGA technology. Due to their volatile technology, the internal registers in SRAM FPGAs must be initialized before configuration can start. This initialization is the source of significant inrush current in SRAM FPGAs during power-up. Due to the nonvolatile nature of flash technology, low power flash devices do not require any initialization at power-up, and there is very little or no crossbar current through PMOS and NMOS devices. Therefore, the transient current at power-up is significantly less than for SRAM FPGAs. Figure 17-1 on page 310 illustrates the types of power consumption by SRAM FPGAs compared to Microsemi's antifuse and flash FPGAs.

2. *For more information on Microsemi FPGA voltage supplies, refer to the appropriate datasheet located at http://www.microsemi.com/soc/techdocs/ds.*

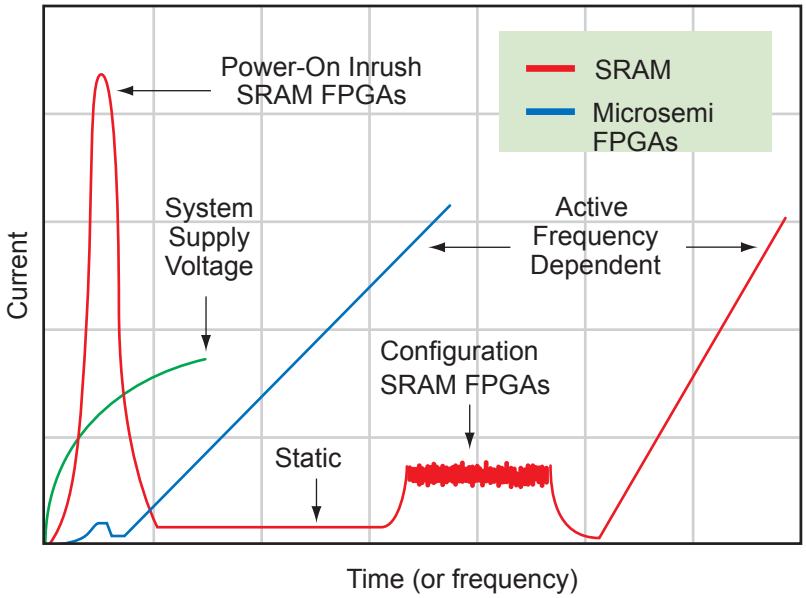


***Figure 17-1*** **• Types of Power Consumption in SRAM FPGAs and Microsemi Nonvolatile FPGAs**

## Transient Current on VCC

The characterization of the transient current on VCC is performed on nearly all devices within the IGLOO, ProASIC3L, and ProASIC3 families. A sample size of five units is used from each device family member. All the device I/Os are internally pulled down while the transient current measurements are performed. For ProASIC3 devices, the measurements at typical conditions show that the maximum transient current on VCC, when the power supply is powered at ramp-rates ranging from 15 V/ms to 0.15 V/ms, does not exceed the maximum standby current specified in the device datasheets. Refer to the DC and Switching Characteristics chapters of the *ProASIC3 Flash Family FPGAS* datasheet and *ProASIC3E Flash Family FPGAs* datasheet for more information.

Similarly, IGLOO, IGLOO nano, IGLOO PLUS, and ProASIC3L devices exhibit very low transient current on VCC. The transient current does not exceed the typical operating current of the device while in active mode. For example, the characterization of AGL600-FG256 V2 and V5 devices has shown that the transient current on VCC is typically in the range of 1–5 mA.

## Transient Current on VCCI

The characterization of the transient current on VCCI is performed on devices within the IGLOO, IGLOO nano, IGLOO PLUS, ProASIC3, ProASIC3 nano, and ProASIC3L groups of devices, similarly to VCC transient current measurements. For ProASIC3 devices, the measurements at typical conditions show that the maximum transient current on VCCI, when the power supply is powered at ramp-rates ranging from 33 V/ms to 0.33 V/ms, does not exceed the maximum standby current specified in the device datasheet. Refer to the DC and Switching Characteristics chapters of the *ProASIC3 Flash Family FPGAS* datasheet and *ProASIC3E Flash Family FPGAs* datasheet for more information.

Similarly, IGLOO, IGLOO PLUS, and ProASIC3L devices exhibit very low transient current on VCCI. The transient current does not exceed the typical operating current of the device while in active mode. For example, the characterization of AGL600-FG256 V2 and V5 devices has shown that the transient current on VCCI is typically in the range of 1–2 mA.

# I/O Behavior at Power-Up/-Down

This section discusses the behavior of device I/Os, used and unused, during power-up/-down of $V_{CC}$ and $V_{CCI}$. As mentioned earlier, VMVx and $V_{CCI}$Bx are tied together, and therefore, inputs and outputs are powered up/down at the same time.

## I/O State during Power-Up/-Down

This section discusses the characteristics of I/O behavior during device power-up and power-down. Before the start of power-up, all I/Os are in tristate mode. The I/Os will remain tristated during power-up until the last voltage supply (VCC or VCCI) is powered to its functional level (power supply functional levels are discussed in the "Power-Up to Functional Time" section on page 312). After the last supply reaches the functional level, the outputs will exit the tristate mode and drive the logic at the input of the output buffer. Similarly, the input buffers will pass the external logic into the FPGA fabric once the last supply reaches the functional level. The behavior of user I/Os is independent of the VCC and VCCI sequence or the state of other voltage supplies of the FPGA (VPUMP and VJTAG). Figure 17-2 shows the output buffer driving HIGH and its behavior during power-up with 10 kΩ external pull-down. In Figure 17-2, VCC is powered first, and VCCI is powered 5 ms after VCC. Figure 17-3 on page 312 shows the state of the I/O when VCCI is powered about 5 ms before VCC. In the circuitry shown in Figure 17-3 on page 312, the output is externally pulled down.

During power-down, device I/Os become tristated once the first power supply (VCC or VCCI) drops below its brownout voltage level. The I/O behavior during power-down is also independent of voltage supply sequencing.

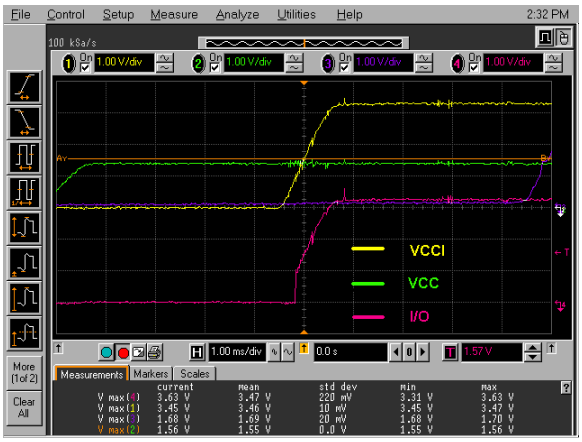


***Figure 17-2* • I/O State when VCC Is Powered before VCCI**

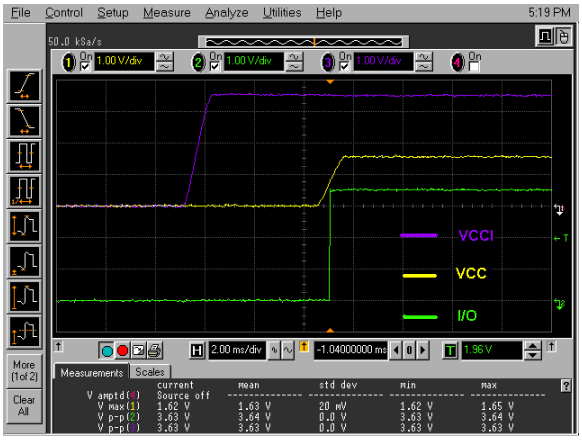


***Figure 17-3*** **• I/O State when VCCI Is Powered before VCC**

## Power-Up to Functional Time

At power-up, device I/Os exit the tristate mode and become functional once the last voltage supply in the power-up sequence (VCCI or VCC) reaches its functional activation level. The power-up–to–functional time is the time it takes for the last supply to power up from zero to its functional level. Note that the functional level of the power supply during power-up may vary slightly within the specification at different ramp-rates. Refer to Table 17-2 for the functional level of the voltage supplies at power-up.

Typical I/O behavior during power-up–to–functional time is illustrated in Figure 17-2 on page 311 and Figure 17-3.

***Table 17-2*** **• Power-Up Functional Activation Levels for VCC and VCCI**

| Device | VCC Functional Activation Level (V) | VCCI Functional Activation Level (V) |
|---|---|---|
| ProASIC3, ProASIC3 nano, IGLOO, IGLOO nano, IGLOO PLUS, and ProASIC3L devices running at VCC = 1.5 V* | 0.85 V ± 0.25 V | 0.9 V ± 0.3 V |
| IGLOO, IGLOO nano, IGLOO PLUS, and ProASIC3L devices running at VCC = 1.2 V* | 0.85 V ± 0.2 V | 0.9 V ± 0.15 V |

*Note: *V5 devices will require a 1.5 V VCC supply, whereas V2 devices can utilize either a 1.2 V or 1.5 V* VCC.

Microsemi's low power flash devices meet Level 0 LAPU; that is, they can be functional prior to $V_{CC}$ reaching the regulated voltage required. This important advantage distinguishes low power flash devices from their SRAM-based counterparts. SRAM-based FPGAs, due to their volatile technology, require hundreds of milliseconds after power-up to configure the design bitstream before they become functional. Refer to Figure 17-4 on page 313 and Figure 17-5 on page 314 for more information.

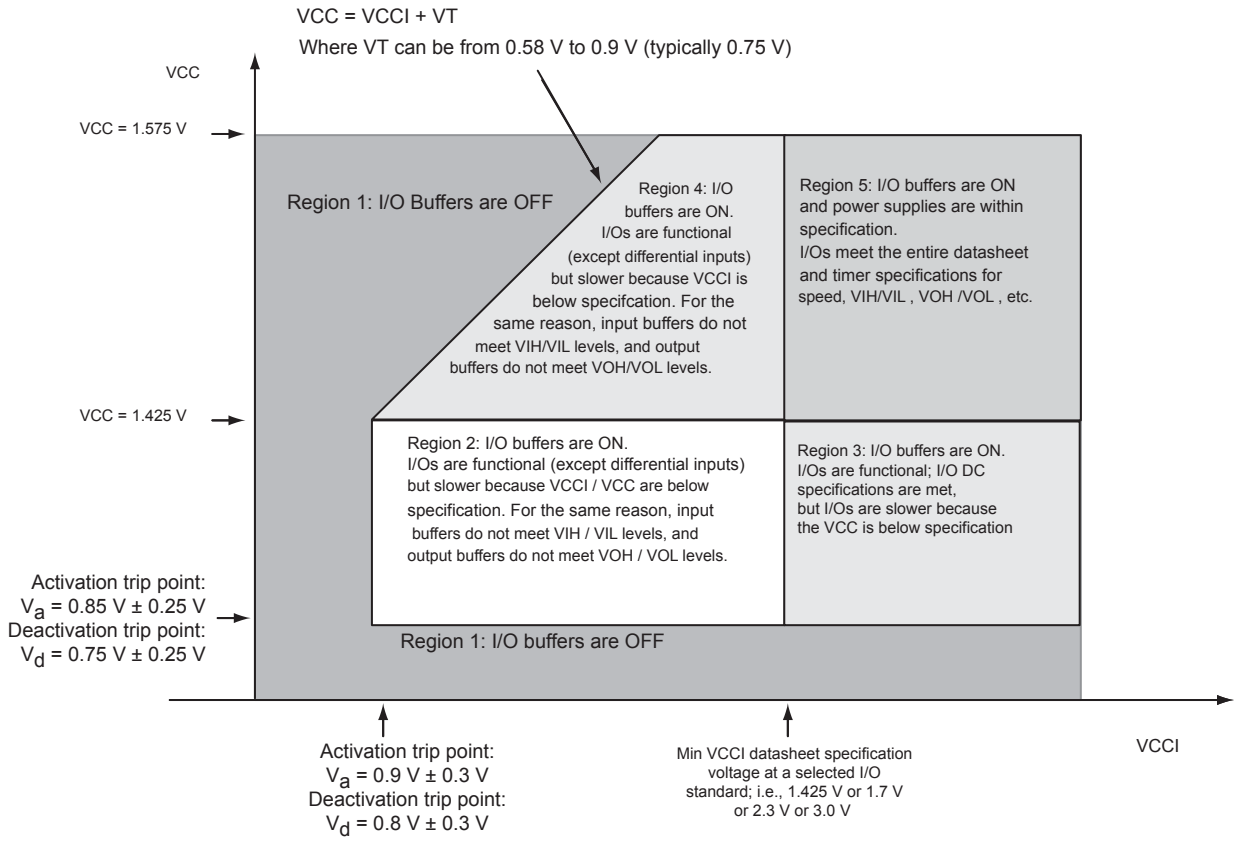


***Figure 17-4* • I/O State as a Function of VCCI and VCC Voltage Levels for IGLOO V5, IGLOO nano V5, IGLOO PLUS V5, ProASIC3L, and ProASIC3 Devices Running at VCC = 1.5 V ± 0.075 V**

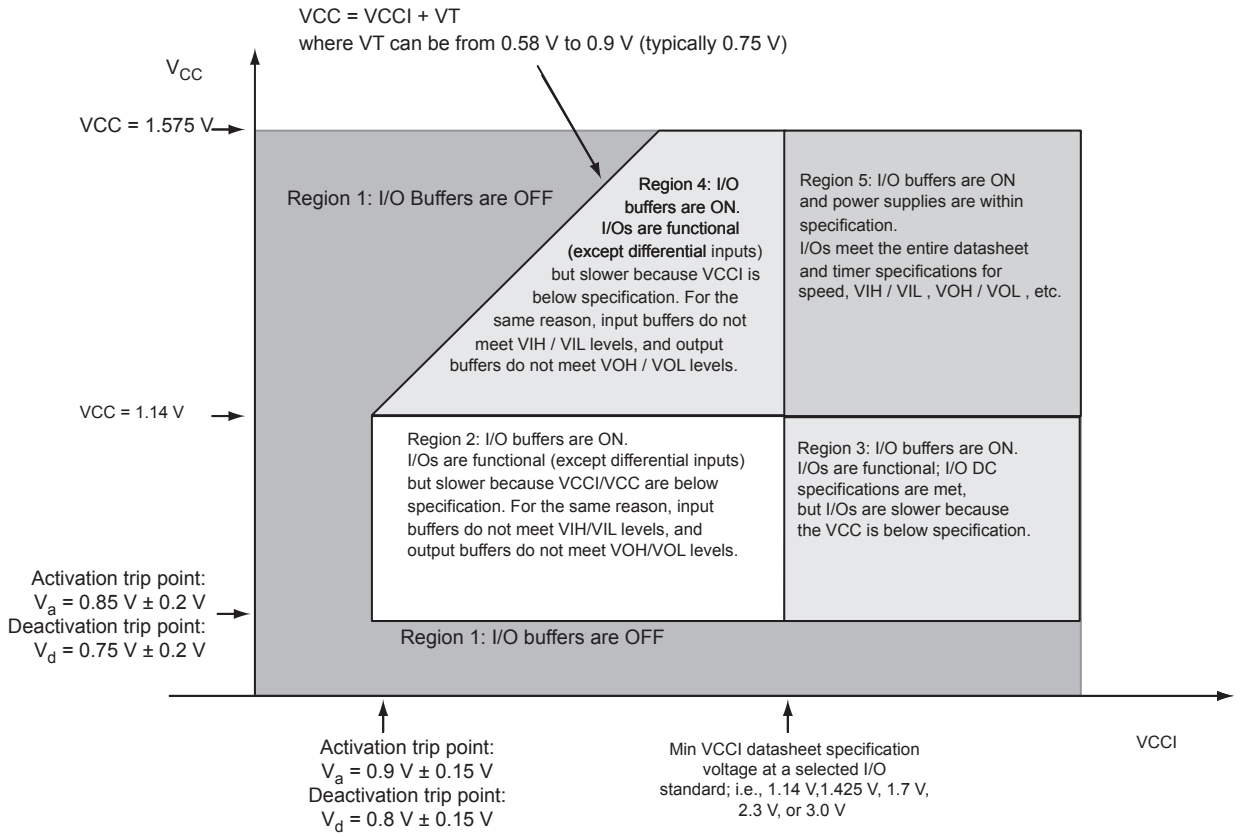


***Figure 17-5* • I/O State as a Function of VCCI and VCC Voltage Levels for IGLOO V2, IGLOO nano V2, IGLOO PLUS V2, and ProASIC3L Devices Running at VCC = 1.2 V ± 0.06 V**

## Brownout Voltage

Brownout is a condition in which the voltage supplies are lower than normal, causing the device to malfunction as a result of insufficient power. In general, Microsemi does not guarantee the functionality of the design inside the flash FPGA if voltage supplies are below their minimum recommended operating condition. Microsemi has performed measurements to characterize the brownout levels of FPGA power supplies. Refer to Table 17-3 for device-specific brownout deactivation levels. For the purpose of characterization, a direct path from the device input to output is monitored while voltage supplies are lowered gradually. The brownout point is defined as the voltage level at which the output stops following the input. Characterization tests performed on several IGLOO, ProASIC3L, and ProASIC3 devices in typical operating conditions showed the brownout voltage levels to be within the specification.

During device power-down, the device I/Os become tristated once the first supply in the power-down sequence drops below its brownout deactivation voltage.

***Table 17-3* • Brownout Deactivation Levels for VCC and VCCI**

| **Devices** | VCC **Brownout Deactivation Level (V)** | VCCI **Brownout Deactivation Level (V)** |
|---|---|---|
| ProASIC3, ProASIC3 nano, IGLOO, IGLOO nano, IGLOO PLUS and ProASIC3L devices running at VCC = 1.5 V | 0.75 V ± 0.25 V | 0.8 V ± 0.3 V |
| IGLOO, IGLOO nano, IGLOO PLUS, and ProASIC3L devices running at VCC = 1.2 V | 0.75 V ± 0.2 V | 0.8 V ± 0.15 V |

### *PLL Behavior at Brownout Condition*

When PLL power supply voltage and/or $V_{CC}$ levels drop below the $V_{CC}$ brownout levels mentioned above for 1.5 V and 1.2 V devices, the PLL output lock signal goes LOW and/or the output clock is lost. The following sections explain PLL behavior during and after the brownout condition.

#### VCCPLL and VCC **Tied Together**

In this condition, both VCC and VCCPLL drop below the 0.75 V (± 0.25 V or ± 0.2 V) brownout level. During the brownout recovery, once VCCPLL and VCC reach the activation point (0.85 ± 0.25 V or ± 0.2 V) again, the PLL output lock signal may still remain LOW with the PLL output clock signal toggling. If this condition occurs, there are two ways to recover the PLL output lock signal:

1. Cycle the power supplies of the PLL (power off and on) by using the PLL POWERDOWN signal.
2. Turn off the input reference clock to the PLL and then turn it back on.

#### **Only** VCCPLL **Is at Brownout**

In this case, only VCCPLL drops below the 0.75 V (± 0.25 V or ± 0.2 V) brownout level and the VCC supply remains at nominal recommended operating voltage (1.5 V ± 0.075 V for 1.5 V devices and 1.2 V ± 0.06 V for 1.2 V devices). In this condition, the PLL behavior after brownout recovery is similar to initial power-up condition, and the PLL will regain lock automatically after VCCPLL is ramped up above the activation level (0.85 ± 0.25 V or ± 0.2 V). No intervention is necessary in this case.

#### **Only** VCC **Is at Brownout**

In this condition, VCC drops below the 0.75 V (± 0.25 V or ± 0.2 V) brownout level and VCCPLL remains at nominal recommended operating voltage (1.5 V ± 0.075 V for 1.5 V devices and 1.2 V ± 0.06 V for 1.2 V devices). During the brownout recovery, once VCC reaches the activation point again (0.85 ± 0.25 V or ± 0.2 V), the PLL output lock signal may still remain LOW with the PLL output clock signal toggling. If this condition occurs, there are two ways to recover the PLL output lock signal:

1. Cycle the power supplies of the PLL (power off and on) by using the PLL POWERDOWN signal.
2. Turn off the input reference clock to the PLL and then turn it back on.

It is important to note that Microsemi recommends using a monotonic power supply or voltage regulator to ensure proper power-up behavior.

### Internal Pull-Up and Pull-Down

Low power flash device I/Os are equipped with internal weak pull-up/-down resistors that can be used by designers. If used, these internal pull-up/-down resistors will be activated during power-up, once both VCC and VCCI are above their functional activation level. Similarly, during power-down, these internal pull-up/-down resistors will turn off once the first supply voltage falls below its brownout deactivation level.

## Cold-Sparing

In cold-sparing applications, voltage can be applied to device I/Os before and during power-up. Cold-sparing applications rely on three important characteristics of the device:

1. I/Os must be tristated before and during power-up.
2. Voltage applied to the I/Os must not power up any part of the device.
3. VCCI should not exceed 3.6 V, per datasheet specifications.

As described in the "Power-Up to Functional Time" section on page 312, Microsemi's low power flash I/Os are tristated before and during power-up until the last voltage supply (VCC or VCCI) is powered up past its functional level. Furthermore, applying voltage to the FPGA I/Os does not pull up VCC or VCCI and, therefore, does not partially power up the device. Table 17-4 includes the cold-sparing test results on A3PE600-PQ208 devices. In this test, leakage current on the device I/O and residual voltage on the power supply rails were measured while voltage was applied to the I/O before power-up.

***Table 17-4* • Cold-Sparing Test Results for A3PE600 Devices**

| Device I/O | Residual Voltage (V) | | Leakage Current |
|---|---|---|---|
| | VCC | VCCI | |
| Input | 0 | 0.003 | <1 µA |
| Output | 0 | 0.003 | <1 µA |

VCCI must not exceed 3.6 V, as stated in the datasheet specification. Therefore, ProASIC3E devices meet all three requirements stated earlier in this section and are suitable for cold-sparing applications.

The following devices and families support cold-sparing:

- IGLOO: AGL015 and AGL030
- All IGLOO nano
- All IGLOO PLUS
- All IGLOOe
- ProASIC3L: A3PE3000L
- ProASIC3: A3P015 and A3P030
- All ProASIC3 nano
- All ProASIC3E
- Military ProASIC3EL: A3PE600L and A3PE3000L
- RT ProASIC3: RT3PE600L and RT3PE3000L

The following devices and families do not support cold-sparing:

- IGLOO: AGL060, AGL125, AGL250, AGL600, AGL1000
- ProASIC3: A3P060, A3P125, A3P250, A3P400, A3P600, A3P1000
- ProASIC3L: A3P250L, A3P600L, A3P1000L
- Military ProASIC3: A3P1000

# Hot-Swapping

Hot-swapping is the operation of hot insertion or hot removal of a card in a powered-up system. The I/Os need to be configured in hot-insertion mode if hot-swapping compliance is required. For more details on the levels of hot-swap compatibility in low power flash devices, refer to the "Hot-Swap Support" section in the I/O Structures chapter of the user's guide for the device you are using.

The following devices and families support hot-swapping:

- IGLOO: AGL015 and AGL030
- All IGLOO nano
- All IGLOO PLUS
- All IGLOOe
- ProASIC3L: A3PE3000L
- ProASIC3: A3P015 and A3P030
- All ProASIC3 nano
- All ProASIC3E
- Military ProASIC3EL: A3PE600L and A3PE3000L
- RT ProASIC3: RT3PE600L and RT3PE3000L

The following devices and families do not support hot-swapping:

- IGLOO: AGL060, AGL125, AGL250, AGL400, AGL600, AGL1000
- ProASIC3: A3P060, A3P125, A3P250, A3P400, A3P600, A3P1000
- ProASIC3L: A3P250L, A3P600L, A3P1000L
- Military ProASIC3: A3P1000

# Conclusion

Microsemi's low power flash FPGAs provide an excellent programmable logic solution for a broad range of applications. In addition to high performance, low cost, security, nonvolatility, and single chip, they are live at power-up (meet Level 0 of the LAPU classification) and offer clear and easy-to-use power-up/-down characteristics. Unlike SRAM FPGAs, low power flash devices do not require any specific power-up/-down sequencing and have extremely low power-up inrush current in any power-up sequence. Microsemi low power flash FPGAs also support both cold-sparing and hot-swapping for applications requiring these capabilities.

# Related Documents

## Datasheets

*ProASIC3 Flash Family FPGAs*

http://www.microsemi.com/soc/documents/PA3_DS.pdf

*ProASIC3E Flash Family FPGAs*

http://www.microsemi.com/soc/documents/PA3E_DS.pdf

# List of Changes

The following table lists critical changes that were made in each revision of the chapter.

| Date | Changes | Page |
|---|---|---|
| v1.2<br>(December 2008) | IGLOO nano and ProASIC3 nano devices were added to the document as supported device types. | |
| v1.1<br>(October 2008) | The "Introduction" section was updated to add Military ProASIC3EL and RT ProASIC3 devices to the list of devices that can have inputs driven in while the device is not powered. | 307 |
| | The "Flash Devices Support Power-Up Behavior" section was revised to include new families and make the information more concise. | 308 |
| | The "Cold-Sparing" section was revised to add Military ProASIC3/EL and RT ProASIC3 devices to the lists of devices with and without cold-sparing support. | 316 |
| | The "Hot-Swapping" section was revised to add Military ProASIC3/EL and RT ProASIC3 devices to the lists of devices with and without hot-swap support. AGL400 was added to the list of devices that do not support hot-swapping. | 317 |
| v1.0<br>(August 2008) | This document was revised, renamed, and assigned a new part number. It now includes data for the IGLOO and ProASIC3L families. | N/A |
| v1.3<br>(March 2008) | The "List of Changes" section was updated to include the three different I/O Structure handbook chapters. | 318 |
| v1.2<br>(February 2008) | The first sentence of the "PLL Behavior at Brownout Condition" section was updated to read, "When PLL power supply voltage and/or $V_{CC}$ levels drop below the VCC brownout levels (0.75 V ± 0.25 V), the PLL output lock signal goes low and/or the output clock is lost." | 315 |
| v1.1<br>(January 2008) | The "PLL Behavior at Brownout Condition" section was added. | 315 |

# A – Summary of Changes

## History of Revision to Chapters

The following table lists chapters that were affected in each revision of this document. Each chapter includes its own change history because it may appear in other device family user's guides. Refer to the individual chapter for a list of specific changes.

| Revision (month/year) | Chapter Affected | List of Changes (page number) |
|---|---|---|
| Revision 5 (September 2012) | "Microprocessor Programming of Microsemi's Low Power Flash Devices" was revised. | 290 |
| Revision 4 (August 2012) | "FPGA Array Architecture in Low Power Flash Devices" was revised. | 20 |
| | The "Low Power Modes in ProASIC3/E and ProASIC3 nano FPGAs" chapter was added (SAR 32020). | 21 |
| | "Clock Conditioning Circuits in Low Power Flash Devices and Mixed Signal FPGAs" was revised. | 113 |
| | "SRAM and FIFO Memories in Microsemi's Low Power Flash Devices" was revised. | 157 |
| | "I/O Structures in nano Devices" was revised. | 183 |
| | The "Pin Descriptions" and "Packaging" chapters were removed. This information is now published in the datasheet for each product line (SAR 34772). | N/A |
| | "In-System Programming (ISP) of Microsemi's Low Power Flash Devices Using FlashPro4/3/3X" was revised. | 273 |
| | "Boundary Scan in Low Power Flash Devices" was revised. | 296 |
| Revision 3 (December 2011) | "Clock Conditioning Circuits in Low Power Flash Devices and Mixed Signal FPGAs" was revised. | 113 |
| | "UJTAG Applications in Microsemi's Low Power Flash Devices" was revised. | 306 |
| Revision 2 (June 2011) | "Clock Conditioning Circuits in Low Power Flash Devices and Mixed Signal FPGAs" was revised. | 113 |
| | "I/O Structures in nano Devices" was revised. | 183 |
| | "I/O Software Control in Low Power Flash Devices" was revised. | 204 |
| | "In-System Programming (ISP) of Microsemi's Low Power Flash Devices Using FlashPro4/3/3X" was revised. | 273 |
| Revision 1 (July 2010) | "Global Resources in Low Power Flash Devices" was revised. | 59 |
| | "Clock Conditioning Circuits in Low Power Flash Devices and Mixed Signal FPGAs" was revised. | 113 |
| | "I/O Software Control in Low Power Flash Devices" was revised. | 204 |
| | "DDR for Microsemi's Low Power Flash Devices" was revised. | 219 |
| | "Programming Flash Devices" was revised. | 232 |

| Revision (month/year) | Chapter Affected | List of Changes (page number) |
|---|---|---|
| Revision 1 (continued) | "In-System Programming (ISP) of Microsemi's Low Power Flash Devices Using FlashPro4/3/3X" was revised. | 273 |
| | "Core Voltage Switching Circuit for IGLOO and ProASIC3L In-System Programming" was revised. | 281 |
| | "Boundary Scan in Low Power Flash Devices" was revised. | 296 |
| Revision 0 (April 2010) | The ProASIC3 nano Low Power Flash FPGAs Handbook was divided into two parts to create the ProASIC3 nano Datasheet ProASIC3 nano Device Family User's Guide. | N/A |

# B – Product Support

Microsemi SoC Products Group backs its products with various support services, including Customer Service, Customer Technical Support Center, a website, electronic mail, and worldwide sales offices. This appendix contains information about contacting Microsemi SoC Products Group and using these support services.

## Customer Service

Contact Customer Service for non-technical product support, such as product pricing, product upgrades, update information, order status, and authorization.

From North America, call 800.262.1060
From the rest of the world, call 650.318.4460
Fax, from anywhere in the world, 650.318.8044

## Customer Technical Support Center

Microsemi SoC Products Group staffs its Customer Technical Support Center with highly skilled engineers who can help answer your hardware, software, and design questions about Microsemi SoC Products. The Customer Technical Support Center spends a great deal of time creating application notes, answers to common design cycle questions, documentation of known issues, and various FAQs. So, before you contact us, please visit our online resources. It is very likely we have already answered your questions.

## Technical Support

Visit the Customer Support website (www.microsemi.com/soc/support/search/default.aspx) for more information and support. Many answers available on the searchable web resource include diagrams, illustrations, and links to other resources on the website.

## Website

You can browse a variety of technical and non-technical information on the SoC home page, at www.microsemi.com/soc.

## Contacting the Customer Technical Support Center

Highly skilled engineers staff the Technical Support Center. The Technical Support Center can be contacted by email or through the Microsemi SoC Products Group website.

### Email

You can communicate your technical questions to our email address and receive answers back by email, fax, or phone. Also, if you have design problems, you can email your design files to receive assistance. We constantly monitor the email account throughout the day. When sending your request to us, please be sure to include your full name, company name, and your contact information for efficient processing of your request.

The technical support email address is soc_tech@microsemi.com.

### My Cases

Microsemi SoC Products Group customers may submit and track technical cases online by going to My Cases.

### Outside the U.S.

Customers needing assistance outside the US time zones can either contact technical support via email (soc_tech@microsemi.com) or contact a local sales office. Sales office listings can be found at www.microsemi.com/soc/company/contact/default.aspx.

## ITAR Technical Support

For technical support on RH and RT FPGAs that are regulated by International Traffic in Arms Regulations (ITAR), contact us via soc_tech_itar@microsemi.com. Alternatively, within My Cases, select **Yes** in the ITAR drop-down list. For a complete list of ITAR-regulated Microsemi FPGAs, visit the ITAR web page.

# Index


## Numerics
5 V input and output tolerance 171

## A
AES encryption 239
architecture 131
  four I/O banks 13
  global 31
  IGLOO 12
  IGLOO nano 11
  IGLOO PLUS 13
  IGLOOe 14
  ProASIC3 nano 11
  ProASIC3E 14
  routing 18
  spine 41
  SRAM and FIFO 135
architecture overview 11
array coordinates 16

## B
boundary scan 291
  board-level recommendations 294
  chain 293
  opcodes 293
brownout voltage 315

## C
CCC 82
  board-level considerations 112
  cascading 109
  Fusion locations 83
  global resources 62
  hardwired I/O clock input 108
  IGLOO locations 81
  IGLOOe locations 82
  locations 80
  naming conventions 179
  overview 61
  ProASIC3 locations 81
  ProASIC3E locations 82
  programming 62
  software configuration 96
  with integrated PLLs 79
  without integrated PLLs 79
chip global aggregation 43
CLKDLY macro 65
clock aggregation 44
clock macros 46
clock sources
  core logic 76
  PLL and CLKDLY macros 73
clocks
  delay adjustment 86
  detailed usage information 104
  multipliers and dividers 85
  phase adjustment 87
  physical constraints for quadrant clocks 108
  SmartGen settings 105
  static timing analysis 107
cold-sparing 170, 316
compiling 195
  report 195
contacting Microsemi SoC Products Group
  customer service 321
  email 321
  web-based technical support 321
customer service 321

## D
DDR
  architecture 205
  design example 216
  I/O options 207
  input/output support 209
  instantiating registers 210
design example 55
design recommendations 46
device architecture 131
DirectC 280
DirectC code 285
dual-tile designs 160

## E
efficient long-line resources 19
encryption 289
ESD protection 171

## F
FIFO
  features 141
  initializing 148
  memory block consumption 147
  software support 154
  usage 144
flash switch for programming 9
FlashLock
  IGLOO and ProASIC devices 241
  permanent 241
FlashROM
  access using JTAG port 123
  architecture 267

architecture of user nonvolatile 117
configuration 120
custom serialization 129
design flow 124
generation 125
programming and accessing 122
programming file 127
programming files 267
SmartGen 126
FlashROM read-back 305

## G

global architecture 31
global buffers
no programmable delays 64
with PLL function 67
with programmable delays 64
global macros
Synplicity 50
globals
designer flow 53
networks 58
spines and rows 41

## H

HLD code
instantiating 192
hot-swap 167
hot-swapping 317

## I

I/O banks
standards 40
standards compatibility 162
I/O standards 77
global macros 46
single-ended 166
I/Os
assigning technologies 198
assignments defined in PDC file 193
automatically assigning 202
behavior at power-up/-down 311
board-level considerations 181
buffer schematic cell 191
cell architecture 207
configuration with SmartGen 188
features 163, 164, 167
global, naming 35
manually assigning technologies 198
nano standard 162
register combining 174
simplified buffer circuitry 165
software support 177
software-controlled attributes 187
user I/O assignment flow chart 185
user naming convention 178
wide range support 166
ISP 223, 224
architecture 261
board-level considerations 271
circuit 277
microprocessor 283

## J

JTAG 1532 261
JTAG interface 285

## L

layout
device-specific 78
LTC3025 linear voltage regulator 277

## M

MAC validation/authentication 288
macros
CLKBUF 77
CLKBUF_LVDS/LVPECL 77
CLKDLY 65, 73
FIFO4KX18 141
PLL 73
PLL macro signal descriptions 68
RAM4K9 137
RAM512X18 139
supported basic RAM macros 136
UJTAG 299
MCU FPGA programming model 286
memory availability 146
memory blocks 135
microprocessor programming 283
Microsemi SoC Products Group
email 321
web-based technical support 321
website 321

## O

OTP 223
output slew rate 175

## P

PDC
global promotion and demotion 51
place-and-route 193
PLL
behavior at brownout condition 315
configuration bits 90
core specifications 84
dynamic PLL configuration 87
functional description 85
power supply decoupling scheme 112
PLL block signals 68
PLL macro block diagram 69
product support
customer service 321

email 321
My Cases 322
outside the U.S. 322
technical support 321
website 321
programmers 225
device support 228
programming
AES encryption 253
basics 223
features 223
file header definition 257
flash and antifuse 225
flash devices 223
glossary 258
guidelines for flash programming 229
header pin numbers 270
microprocessor 283
power supplies 263
security 247
solution 268
solutions 227
voltage 263
volume services 226
programming support 221

## R

RAM
memory block consumption 147
remote upgrade via TCP/IP 288
routing structure 18

## S

Schmitt trigger 174
security 264
architecture 237
encrypted programming 288
examples 242
features 238
FlashLock 241
FlashROM 121
FlashROM use models 245
in programmable logic 235
overview 235
signal integrity problem 271
silicon testing 304
single tile designs 159
SmartGen 154
spine architecture 41
spine assignment 52
SRAM
features 137
initializing 148
software support 154
usage 141
SSOs 176
STAPL player 285
STAPL vs. DirectC 287
switching circuit 278
verification 278
synthesizing 192

## T

TAP controller state machine 291, 300
tech support
ITAR 322
My Cases 322
outside the U.S. 322
technical support 321
transient current
VCC 310
VCCI 310
transient current, power-up/-down 309

## U

UJTAG
CCC dynamic reconfiguration 302
fine tuning 303
macro 299
operation 300
port usage 301
use to read FlashROM contents 297
ultra-fast local lines 18

## V

variable aspect ratio and cascading 145
VersaNet global networks 33
VersaTile 15
very-long-line resources 19
ViewDraw 191
VREF pins
manually assigning 199

## W

weak pull-down 175
weak pull-up 175
web-based technical support 321

**Microsemi Corporate Headquarters**
One Enterprise, Aliso Viejo CA 92656 USA
Within the USA: +1 (949) 380-6100
Sales: +1 (949) 380-6136
Fax: +1 (949) 215-4996

Microsemi Corporation (NASDAQ: MSCC) offers a comprehensive portfolio of semiconductor solutions for: aerospace, defense and security; enterprise and communications; and industrial and alternative energy markets. Products include high-performance, high-reliability analog and RF devices, mixed signal and RF integrated circuits, customizable SoCs, FPGAs, and complete subsystems. Microsemi is headquartered in Aliso Viejo, Calif. Learn more at **www.microsemi.com**.

© 2012 Microsemi Corporation. All rights reserved. Microsemi and the Microsemi logo are trademarks of Microsemi Corporation. All other trademarks and service marks are the property of their respective owners.

50200255-5/9.12

## Looking for pricing, stock, or lifecycle information?

Click below to explore more details on WIN SOURCE:

- View A3PN015-QNG68I on WIN SOURCE
- Microchip Technology Information

## Optimize Your Supply Chain with WIN SOURCE Solutions

- Global Sourcing Solution
- Obsolete Management
- Cost Control Management
- Shortage Management
- Alternative Solution
- Excess Inventory Management