THE DATASHEET OF

A3982SLB

www.win-source.net 0086-755-83957316

DMOS Stepper Motor Driver with Translator

Features and Benefits

- Low $R_{DS(on)}$ outputs
- Automatic current decay mode detection/selection
- Mixed and Slow current decay modes
- Synchronous rectification for low power dissipation
- Internal UVLO and thermal shutdown circuitry
- Crossover-current protection

Package: 24 pin SOICW with internally fused leads (suffix LB)

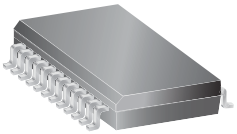

Not to scale

Description

The A3982 is a complete stepper motor driver with built-in translator for easy operation. It is designed to operate bipolar stepper motors in full- and half-step modes, with an output drive capacity of up to 35 V and ±2 A. The A3982 includes a fixed off-time current regulator which has the ability to operate in Slow or Mixed decay modes.

The translator is the key to the easy implementation of the A3982. Simply inputting one pulse on the STEP input drives the motor one step. There are no phase sequence tables, high frequency control lines, or complex interfaces to program. The A3982 interface is an ideal fit for applications where a complex microprocessor is unavailable or is overburdened.

The chopping control in the A3982 automatically selects the current decay mode (Slow or Mixed). When a signal occurs at the STEP input pin, the A3982 determines if that step results in a higher or lower current in each of the motor phases. If the change is to a higher current, then the decay mode is set to Slow decay. If the change is to a lower current, then the current decay is set to Mixed (set initially to a fast decay for a period amounting to 31.25% of the

Continued on the next page…

Pin-out Diagram

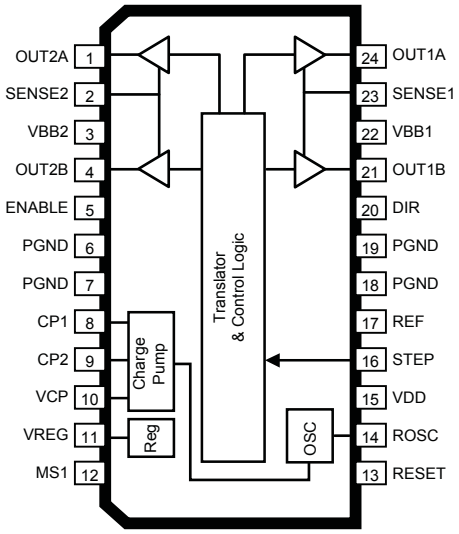

Description (continued)

fixed off-time, then to a slow decay for the remainder of the off-time). This current decay control scheme results in reduced audible motor noise, increased step accuracy, and reduced power dissipation.

Internal synchronous rectification control circuitry is provided to improve power dissipation during PWM operation.

Internal circuit protection includes: thermal shutdown with hysteresis, undervoltage lockout (UVLO), and crossover-current protection. Special power-on sequencing is not required.

The A3982 is supplied in a 24-pin wide-body SOIC (package LB) with internally-fused power ground leads for enhanced thermal dissipation. It is lead (Pb) free, with 100% matte tin plated leadframe.

Selection Guide

Part Number	Packing*	Package
A3982SLB-T	31 pieces per tube	24-pin Wide SOIC with pins 6 and 7, and 18 and 19, fused internally
A3982SLBTR-T	1000 pieces per reel	

*Contact Allegro for additional packing options

Absolute Maximum Ratings

Characteristic	Symbol	Notes	Rating	Units
Load Supply Voltage	V_{BB}		35	V
Logic Input Voltage	V_{IN}		–0.3 to 7	V
Sense Voltage	V_{SENSE}		0.5	V
Reference Voltage	V_{REF}		4	V
Output Current	I_{OUT}	Output current rating may be limited by duty cycle, ambient temperature, and heat sinking. Under any set of conditions, do not exceed the specified current rating or a junction temperature of 150°C.	±2	A
Operating Ambient Temperature	T_A	Range S	–20 to 85	ºC
Maximum Junction Temperature	T_J(max)		150	ºC
Storage Temperature	T_{stg}		–55 to 150	ºC

Functional Block Diagram

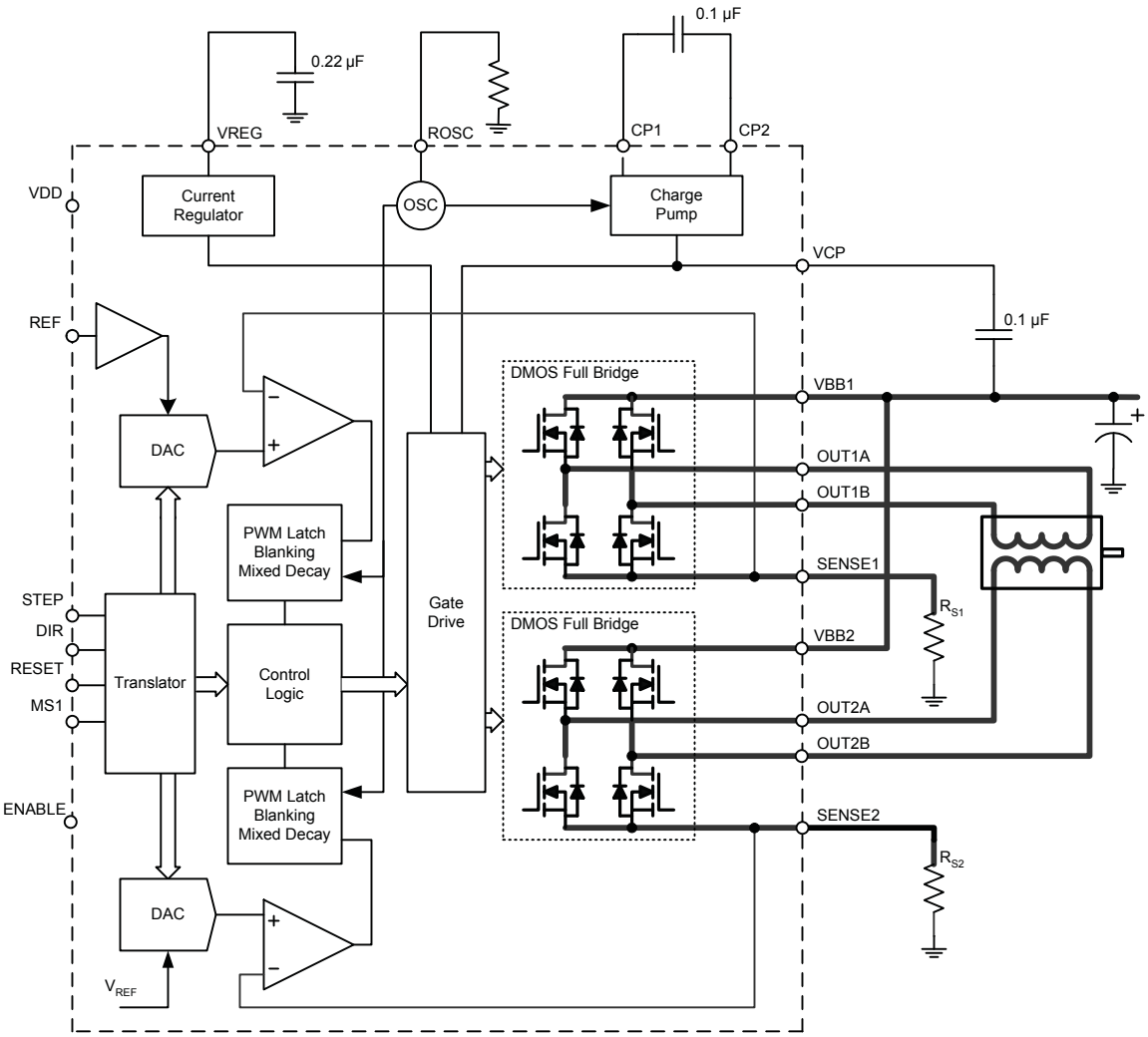

ELECTRICAL CHARACTERISTICS[1] at T_A = 25°C, V_{BB} = 35 V (unless otherwise noted)

Characteristics	Symbol	Test Conditions	Min.	Typ.[2]	Max.	Units
Output Drivers						
Load Supply Voltage Range	V_{BB}	Operating	8	–	35	V
Logic Supply Voltage Range	V_{DD}	Operating	3.0	–	5.5	V
Output On Resistance	R_{DSON}	Source Driver, I_{OUT} = –1.5 A	–	0.370	0.460	Ω
		Sink Driver, I_{OUT} = 1.5 A	–	0.330	0.380	Ω
Body Diode Forward Voltage	V_F	Source Diode, I_F = –1.5 A	–	–	1.2	V
		Sink Diode, I_F = 1.5 A	–	–	1.2	V
Motor Supply Current	I_{BB}	f_{PWM} < 50 kHz	–	–	4	mA
		Operating, outputs disabled	–	–	2	mA
Logic Supply Current	I_{DD}	f_{PWM} < 50 kHz	–	–	8	mA
		Outputs off	–	–	5	mA
Control Logic						
Logic Input Voltage	$V_{IN(1)}$		V_{DD}×0.7	–	–	V
	$V_{IN(0)}$		–	–	V_{DD}×0.3	V
Logic Input Current	$I_{IN(1)}$	V_{IN} = V_{DD}×0.7	–20	<1.0	20	μA
	$I_{IN(0)}$	V_{IN} = V_{DD}×0.3	–20	<1.0	20	μA
Input Hysteresis	$V_{HYS(IN)}$		150	300	500	mV
Blank Time	t_{BLANK}		0.7	1	1.3	μs
Fixed Off-Time	t_{OFF}	OSC > 3 V	20	30	40	μs
		R_{OSC} = 25 kΩ	23	30	37	μs
Reference Input Voltage Range	V_{REF}		0	–	4	V
Reference Input Current	I_{REF}		–3	0	3	μA
Current Trip-Level Error[3]	err_I	V_{REF} = 2 V, $\%I_{TripMAX}$ = 70.71%	–	–	±5	%
		V_{REF} = 2 V, $\%I_{TripMAX}$ = 100.00%	–	–	±5	%
Crossover Dead Time	t_{DT}		100	475	800	ns
Protection						
Thermal Shutdown Temperature	T_J		–	165	–	°C
Thermal Shutdown Hysteresis	T_{JHYS}		–	15	–	°C
UVLO Enable Threshold	UV_{LO}	V_{DD} rising	2.35	2.7	3	V
UVLO Hysteresis	UV_{HYS}		0.05	0.10	–	V

[1]Negative current is defined as coming out of (sourcing from) the specified device pin.
[2]Typical data are for initial design estimations only, and assume optimum manufacturing and application conditions. Performance may vary for individual units, within the specified maximum and minimum limits.
[3]$err_I = (I_{Trip} - I_{Prog}) / I_{Prog}$, where $I_{Prog} = \%I_{TripMAX} \times I_{TripMAX}$.

THERMAL CHARACTERISTICS

Characteristic	Symbol	Test Conditions*	Value	Units
Package Thermal Resistance	$R_{\theta JA}$	One-layer PCB, one-sided with copper limited to solder pads	77	ºC/W
		One-layer PCB, two-sided with copper limited to solder pads and 3.57 in.^{2} of copper area on each side, connected to PGND pins	45	ºC/W
		Four-layer PCB, based on JEDEC standard	35	ºC/W

*Additional thermal information available on Allegro Web site.

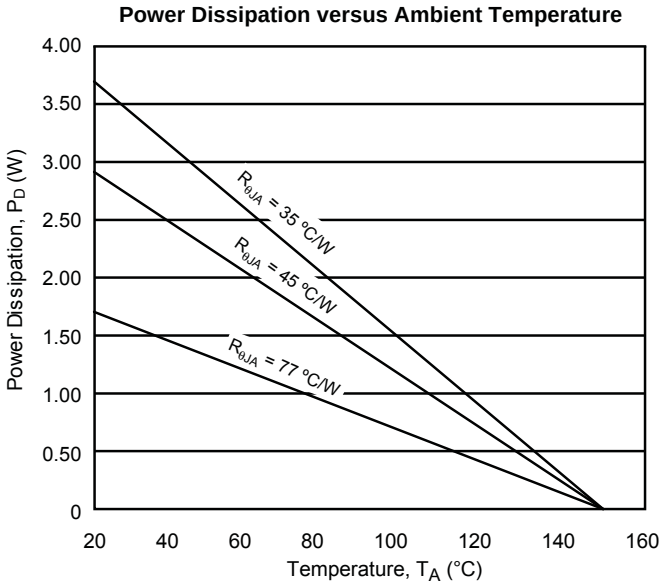

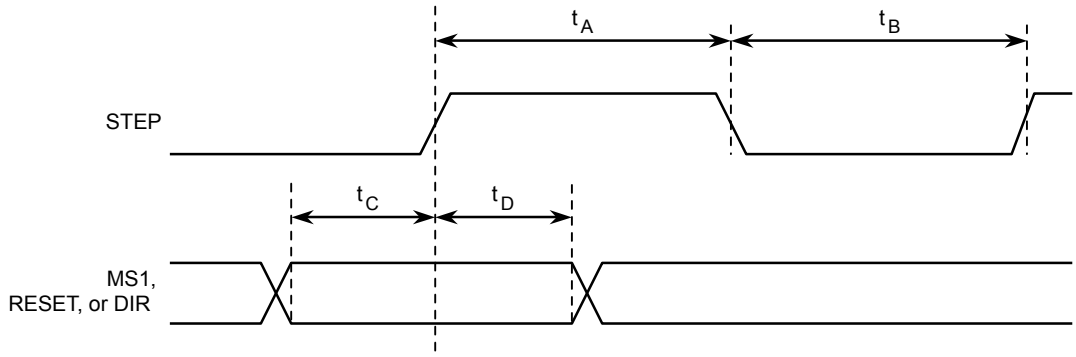

Time Duration	Symbol	Typ.	Unit
STEP minimum, HIGH pulse width	t_A	1	µs
STEP minimum, LOW pulse width	t_B	1	µs
Setup time, input change to STEP	t_C	200	ns
Hold time, input change to STEP	t_D	200	ns

Figure 1. Logic Interface Timing Diagram

Table 1. Stepping Resolution Truth Table

MS1	Step Resolution	Excitation Mode
L	Full Step	2 Phase
H	Half Step	1-2 Phase

Functional Description

Device Operation. The A3982 is a complete stepper motor driver with a built-in translator for easy operation with minimal control lines. It is designed to operate bipolar stepper motors in full- and half-step modes. The currents in each of the two output full-bridges and all of the N-channel DMOS FETs are regulated with fixed off-time PMW (pulse width modulated) control circuitry. At each step, the current for each full-bridge is set by the value of its external current-sense resistor (R_{S1} or R_{S2}), a reference voltage (V_{REF}), and the output voltage of its DAC (which in turn is controlled by the output of the translator).

At power-on or reset, the translator sets the DACs and the phase current polarity to the initial Home state (shown in figures 2 and 3), and the current regulator to Mixed Decay Mode for both phases. When a step command signal occurs on the STEP input, the translator automatically sequences the DACs to the next level and current polarity. (See table 2 for the current-level sequence.) The step resolution is set by input MS1, as shown in table 1.

When stepping, if the new output levels of the DACs are lower than their previous output levels, then the decay mode for the active full-bridge is set to Mixed. If the new output levels of the DACs are higher than or equal to their previous levels, then the decay mode for the active full-bridge is set to Slow. This automatic current decay selection improves stepping performance by reducing the distortion of the current waveform that results from the back EMF of the motor.

RESET Input (RESET). The RESET input sets the translator to a predefined Home state (shown in figures 2 and 3), and turns off all of the DMOS outputs. All STEP inputs are ignored until the RESET input is set to high.

Step Input (STEP). A low-to-high transition on the STEP input sequences the translator and advances the motor one increment. The translator controls the input to the DACs and the direction of current flow in each winding. The size of the increment is determined by input MS1, as shown in table 1.

Direction Input (DIR). This determines the direction of rotation of the motor. When low, the direction will be clockwise and when high, counterclockwise. Changes to this input do not take effect until the next STEP rising edge.

Internal PWM Current Control. Each full-bridge is controlled by a fixed off-time PWM current control circuit that limits the load current to a desired value, I_{TRIP}. Initially, a diagonal pair of source and sink DMOS outputs are enabled and current flows through the motor winding and the current sense resistor, R_{Sx}. When the voltage across R_{Sx} equals the DAC output voltage, the current sense comparator resets the PWM latch. The latch then turns off either the source DMOS FET (when in Slow Decay Mode) or the sink and source DMOS FETs (when in Mixed Decay Mode).

The maximum value of current limiting is set by the selection of R_{Sx} and the voltage at the VREF pin. The transconductance function is approximated by the maximum value of current limiting, $I_{TripMAX}$ (A), which is set by

$$I_{TripMAX} = V_{REF} / (8 \times R_S)$$

where R_S is the resistance of the sense resistor (Ω) and V_{REF} is the input voltage on the REF pin (V).

The DAC output reduces the V_{REF} output to the current sense comparator in precise steps, such that

$$I_{trip} = (\%I_{TripMAX} / 100) \times I_{TripMAX}$$

(See table 2 for $\%I_{TripMAX}$ at each step.)

It is critical that the maximum rating (0.5 V) on the SENSE1 and SENSE2 pins is not exceeded.

Fixed Off-Time. The internal PWM current control circuitry uses a one-shot circuit to control the duration of time that the DMOS FETs remain off. The one shot off-time, t_{OFF},

is determined by the selection of an external resistor connected from the ROSC timing pin to ground. If the ROSC pin is tied to an external voltage > 3 V, then t_{OFF} defaults to 30 µs. The ROSC pin can be safely connected to the VDD pin for this purpose. The value of t_{OFF} (µs) is approximately

$$t_{OFF} \approx R_{OSC} / 825$$

Blanking. This function blanks the output of the current sense comparators when the outputs are switched by the internal current control circuitry. The comparator outputs are blanked to prevent false overcurrent detection due to reverse recovery currents of the clamp diodes, and switching transients related to the capacitance of the load. The blank time, t_{BLANK} (µs), is approximately

$$t_{BLANK} \approx 1\ \mu s$$

Charge Pump (CP1 and CP2). The charge pump is used to generate a gate supply greater than that of VBB for driving the source-side DMOS gates. A 0.1 µF ceramic capacitor, should be connected between CP1 and CP2. In addition, a 0.1 µF ceramic capacitor is required between VCP and VBB, to act as a reservoir for operating the high-side DMOS gates.

VREG (VREG). This internally-generated voltage is used to operate the sink-side DMOS outputs. The VREG pin must be decoupled with a 0.22 µF ceramic capacitor to ground. VREG is internally monitored. In the case of a fault condition, the DMOS outputs of the A3982 are disabled.

Enable Input (ENABLE). This input turns on or off all of the DMOS outputs. When set to a logic high, the outputs are disabled. When set to a logic low, the internal control enables the outputs as required. The translator inputs STEP, DIR, and MS1, as well as the internal sequencing logic, all remain active, independent of the ENABLE input state.

Shutdown. In the event of a fault, overtemperature (excess T_J) or an undervoltage (on VCP), the DMOS outputs of the A3982 are disabled until the fault condition is removed. At power-on, the UVLO (undervoltage lockout) circuit disables the DMOS outputs and resets the translator to the Home state.

Mixed Decay Operation. The bridge can operate in Mixed Decay Mode, depending on the step sequence, as shown in figures 3 thru 5. As the trip point is reached, the A3982 initially goes into a fast decay mode for 31.25% of the off-time, t_{OFF}. After that, it switches to Slow Decay Mode for the remainder of t_{OFF}.

Synchronous Rectification. When a PWM-off cycle is triggered by an internal fixed–off-time cycle, load current recirculates according to the decay mode selected by the control logic. This synchronous rectification feature turns on the appropriate FETs during current decay, and effectively shorts out the body diodes with the low DMOS R_{DSON}. This reduces power dissipation significantly, and can eliminate the need for external Schottky diodes in many applications. Turning off synchronous rectification prevents the reversal of the load current when a zero-current level is detected.

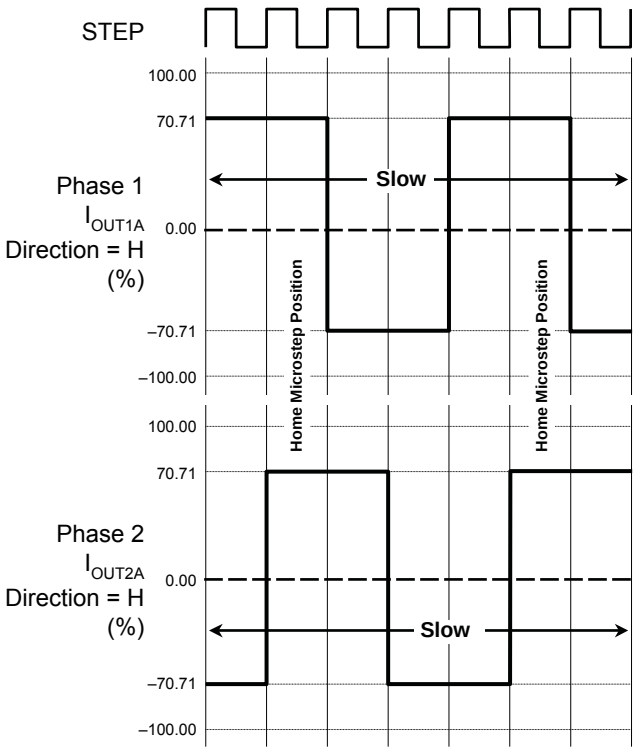

Figure 2. Decay Mode for Full-Step Increments

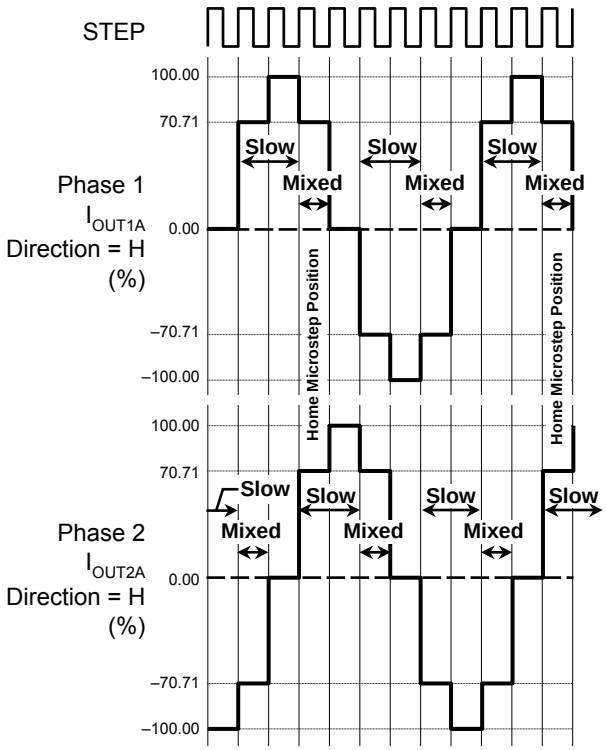

Figure 3. Decay Modes for Half-Step Increments

Table 2. Step Sequencing Settings
Home step position at Step Angle 45º; DIR = H

Full Step #	Half Step #	Phase 1 Current [% $I_{tripMax}$] (%)	Phase 2 Current [% $I_{tripMax}$] (%)	Step Angle (º)
	1	100.00	0.00	0.0
1	2	70.71	70.71	45.0
	3	0.00	100.00	90.0
2	4	–70.71	70.71	135.0
	5	–100.00	0.00	180.0
3	6	–70.71	–70.71	225.0
	7	0.00	–100.00	270.0
4	8	70.71	–70.71	315.0

Pin List Table

Name	Description	Number
OUT2A	DMOS Full Bridge 2 Output A	1
SENSE2	Sense resistor for Bridge 2	2
VBB2	Load supply	3
OUT2B	DMOS Full Bridge 2 Output B	4
ENABLE	Logic input	5
PGND	Power ground	6
PGND	Power ground	7
CP1	Charge pump capacitor 1	8
CP2	Charge pump capacitor 2	9
VCP	Reservoir capacitor	10
VREG	Regulator decoupling	11
MS1	Logic input	12
RESET	Logic input	13
ROSC	Timing set	14
VDD	Logic supply	15
STEP	Logic input	16
REF	Current trip reference voltage input	17
PGND	Power ground	18
PGND	Power ground	19
DIR	Logic input	20
1OUT1B	DMOS Full Bridge 1 Output B	21
VBB1	Load supply	22
SENSE1	Sense resistor for Bridge 1	23
OUT1A	DMOS Full Bridge 1 Output A	24

LB Package, 24-Pin Wide Body SOIC

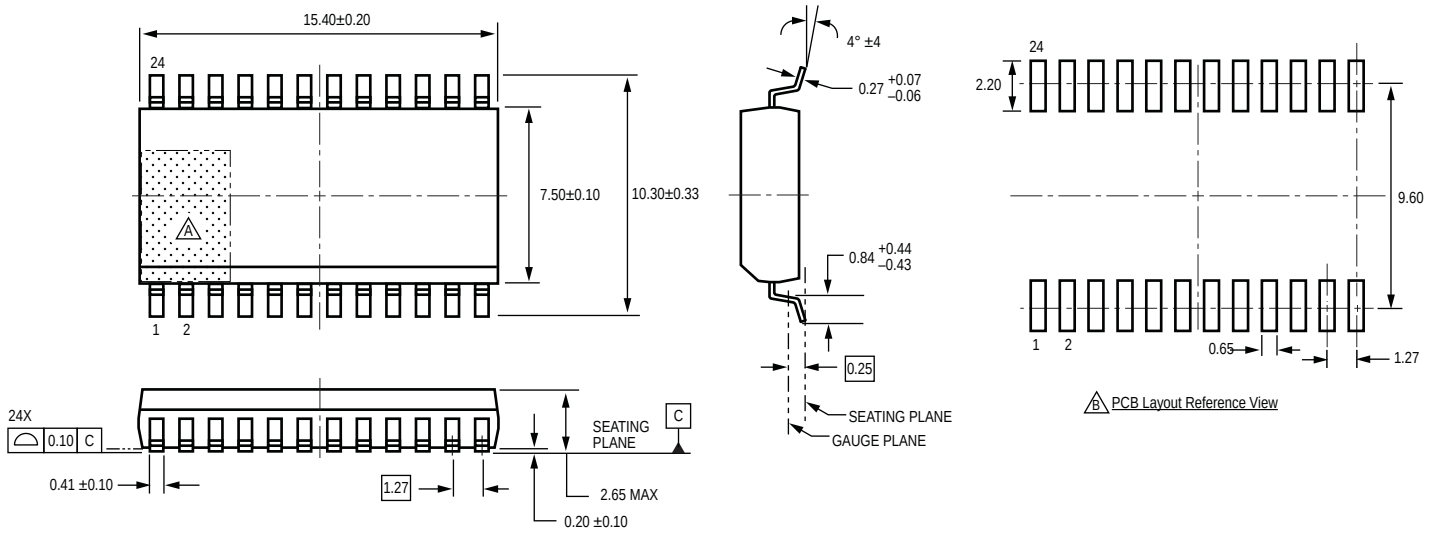

For reference only
Pins 6 and 7, and 18 and 19 internally fused
Dimensions in millimeters
(Reference JEDEC MS-013 AD)
Dimensions exclusive of mold flash, gate burrs, and dambar protrusions
Exact case and lead configuration at supplier discretion within limits shown

A Terminal #1 mark area

B Reference pad layout (reference IPC SOIC127P1030X265-24M)
All pads a minimum of 0.20 mm from all adjacent pads; adjust as necessary to meet application process requirements and PCB layout tolerances

Copyright ©2005-2013, Allegro MicroSystems, LLC

Allegro MicroSystems, LLC reserves the right to make, from time to time, such departures from the detail specifications as may be required to permit improvements in the performance, reliability, or manufacturability of its products. Before placing an order, the user is cautioned to verify that the information being relied upon is current.

Allegro's products are not to be used in life support devices or systems, if a failure of an Allegro product can reasonably be expected to cause the failure of that life support device or system, or to affect the safety or effectiveness of that device or system.

The information included herein is believed to be accurate and reliable. However, Allegro MicroSystems, LLC assumes no responsibility for its use; nor for any infringement of patents or other rights of third parties which may result from its use.

For the latest version of this document, visit our website:
www.allegromicro.com

Looking for pricing, stock, or lifecycle information?

Click below to explore more details on WIN SOURCE:

- View A3982SLB on WIN SOURCE
- Allegro MicroSystems, LLC Information

Optimize Your Supply Chain with WIN SOURCE Solutions

- Global Sourcing Solution
- Obsolete Management
- Cost Control Management
- Shortage Management
- Alternative Solution
- Excess Inventory Management