THE DATASHEET OF

MPF4392

www.win-source.net 0086-755-83957316

MPF4392, MPF4393

JFET Switching Transistors

N−Channel − Depletion

ON Semiconductor®

http://onsemi.com

OBSOLETE
THIS DEVICE IS OBSOLETE
PLEASE CONTACT YOUR onsemi
REPRESENTATIVE FOR INFORMATION

Features

- Pb−Free Packages are Available*

MAXIMUM RATINGS

Rating	Symbol	Value	Unit
Drain−Source Voltage	V_{DS}	30	Vdc
Drain−Gate Voltag	V_{DG}	30	Vdc
Gate−Source Voltage	V_{GS}	30	Vdc
Forward Gate Current	$I_{G(f)}$	50	mAdc
Total Device Dissipation @ T_A = 25°C Derate above 25°C	P_D	 350 2.8	 mW mW/°C
Operating and Storage Channel Temperature Range	$T_{channel}$, T_{stg}	−65 to +150	°C

Stresses exceeding Maximum Ratings may damage the device. Maximum Ratings are stress ratings only. Functional operation above the Recommended Operating Conditions is not implied. Extended exposure to stresses above the Recommended Operating Conditions may affect device reliability.

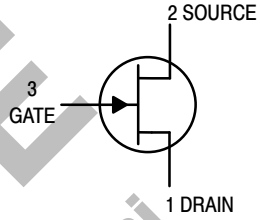

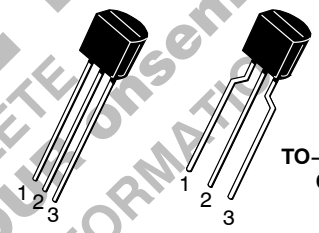

TO−92 (TO−226AA)
CASE 29−11
STYLE 5

MARKING DIAGRAM

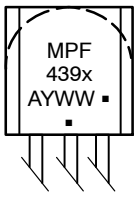

MPF439x = Device Code
x = 2 or 3
A = Assembly Location
Y = Year
WW = Work Week
▪ = Pb−Free Package
(Note: Microdot may be in either location)

ORDERING INFORMATION

Device	Package	Shipping†
MPF4392	TO−92	1000 Units / Bulk
MPF4392G	TO−92 (Pb−Free)	1000 Units / Bulk
MPF4393	TO−92	1000 Units / Bulk
MPF4393G	TO−92 (Pb−Free)	1000 Units / Bulk
MPF4393RLRP	TO−92	1000 / Ammo Box
MPF4393RLRPG	TO−92 (Pb−Free)	1000 / Ammo Box

*For additional information on our Pb−Free strategy and soldering details, please download the ON Semiconductor Soldering and Mounting Techniques Reference Manual, SOLDERRM/D.

© Semiconductor Components Industries, LLC, 2012

February, 2012 − Rev. 6
Publication Order Number:
MPF4392/D

ELECTRICAL CHARACTERISTICS (T_A = 25°C unless otherwise noted)

Characteristic		Symbol	Min	Typ	Max	Unit
OFF CHARACTERISTICS						
Gate−Source Breakdown Voltage (I_G = −1.0 μAdc, V_{DS} = 0)		$V_{(BR)GSS}$	30	–	–	Vdc
Gate Reverse Current (V_{GS} = −15 Vdc, V_{DS} = 0)		I_{GSS}	–	–	1.0	nAdc
(V_{GS} = −15 Vdc, V_{DS} = 0, T_A = 100°C)			–	–	0.2	μAdc
Drain−Cutoff Current (V_{DS} = 15 Vdc, V_{GS} = −12 Vdc)		$I_{D(off)}$	–	–	1.0	nAdc
(V_{DS} = 15 Vdc, V_{GS} = −12 Vdc, T_A = 100°C)			–	–	1.0	μAdc
Gate Source Voltage (V_{DS} = 15 Vdc, I_D = 10 nAdc)	MPF4392	V_{GS}	−2.0	–	−5.0	Vdc
	MPF4393		−0.5	–	−3.0	
ON CHARACTERISTICS						
Zero−Gate−Voltage Drain Current (Note 1) (V_{DS} = 15 Vdc, V_{GS} = 0)	MPF4392	I_{DSS}	25	–	75	mAdc
	MPF4393		5.0	–	30	
Drain−Source On−Voltage (I_D = 6.0 mAdc, V_{GS} = 0)	MPF4392	$V_{DS(on)}$	–	–	0.4	Vdc
(I_D = 3.0 mAdc, V_{GS} = 0)	MPF4393		–	–	0.4	
Static Drain−Source On Resistance (I_D = 1.0 mAdc, V_{GS} = 0)	MPF4392	$r_{DS(on)}$	–	–	60	Ω
	MPF4393		–	–	100	
SMALL−SIGNAL CHARACTERISTICS						
Forward Transfer Admittance (V_{DS} = 15 Vdc, I_D = 25 mAdc, f = 1.0 kHz)	MPF4392	$\|y_{fs}\|$	–	17	–	mmhos
(V_{DS} = 15 Vdc, I_D = 5.0 mAdc, f = 1.0 kHz)	MPF4393		–	12	–	
Drain−Source "ON" Resistance (V_{GS} = 0, I_D = 0, f = 1.0 kHz)	MPF4392	$r_{ds(on)}$	–	–	60	Ω
	MPF4393		–	–	100	
Input Capacitance (V_{GS} = 15 Vdc, V_{DS} = 0, f = 1.0 MHz)		C_{iss}	–	6.0	10	pF
Reverse Transfer Capacitance (V_{GS} = 12 Vdc, V_{DS} = 0, f = 1.0 MHz)		C_{rss}	–	2.5	3.5	pF
(V_{DS} = 15 Vdc, I_D = 10 mAdc, f = 1.0 MHz)			–	3.2	–	
SWITCHING CHARACTERISTICS						
Rise Time (See Figure 2) ($I_{D(on)}$ = 6.0 mAdc)	MPF4392	t_r	–	2.0	5.0	ns
($I_{D(on)}$ = 3.0 mAdc)	MPF4393		–	2.5	5.0	
Fall Time (See Figure 4) ($V_{GS(off)}$ = 7.0 Vdc)	MPF4392	t_f	–	15	20	ns
($V_{GS(off)}$ = 5.0 Vdc)	MPF4393		–	29	35	
Turn−On Time (See Figures 1 and 2) ($I_{D(on)}$ = 6.0 mAdc)	MPF4392	t_{on}	–	4.0	15	ns
($I_{D(on)}$ = 3.0 mAdc)	MPF4393		–	6.5	15	
Turn−Off Time (See Figures 3 and 4) ($V_{GS(off)}$ = 7.0 Vdc)	MPF4392	t_{off}	–	20	35	ns
($V_{GS(off)}$ = 5.0 Vdc)	MPF4393		–	37	55	

1. Pulse Test: Pulse Width ≤ 300 μs, Duty Cycle ≤ 3.0%.

OBSOLETE
THIS DEVICE IS OBSOLETE
PLEASE CONTACT YOUR onsemi
REPRESENTATIVE FOR INFORMATION

TYPICAL SWITCHING CHARACTERISTICS

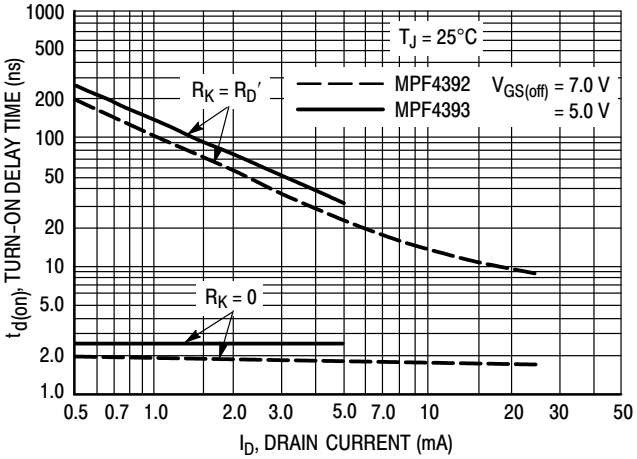

Figure 1. Turn−On Delay Time

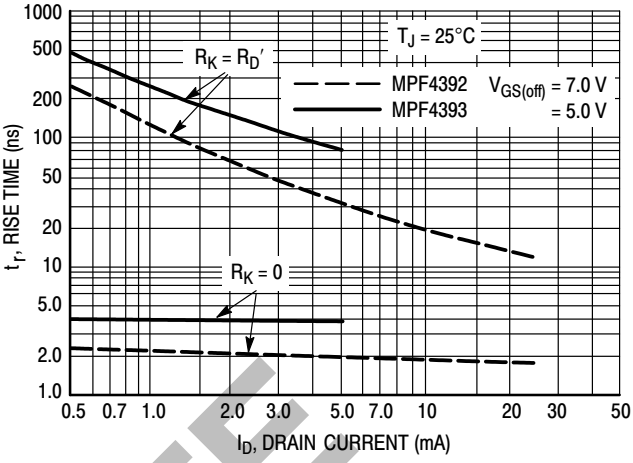

Figure 2. Rise Time

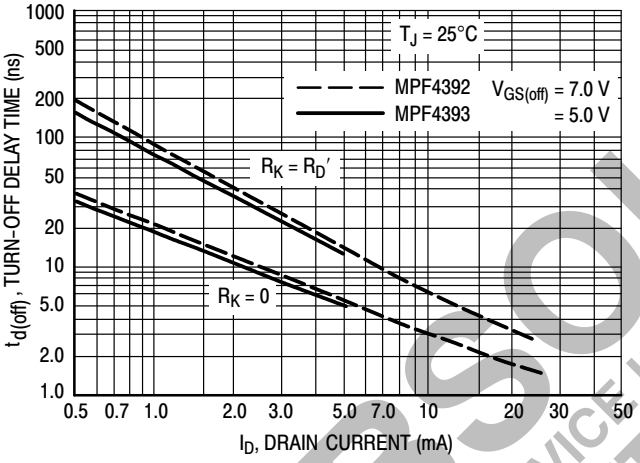

Figure 3. Turn−Off Delay Time

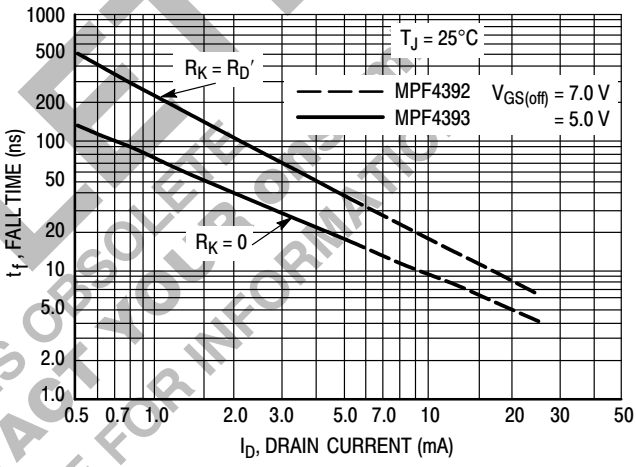

Figure 4. Fall Time

OBSOLETE
THIS DEVICE IS OBSOLETE
PLEASE CONTACT YOUR ON
REPRESENTATIVE FOR INFORMATIO

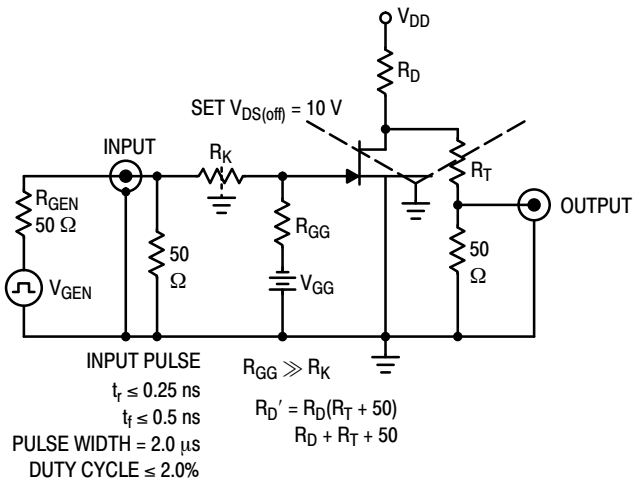

Figure 5. Switching Time Test Circuit

NOTE 1

The switching characteristics shown above were measured using a test circuit similar to Figure 5. At the beginning of the switching interval, the gate voltage is at Gate Supply Voltage ($-V_{GG}$). The Drain–Source Voltage (V_{DS}) is slightly lower than Drain Supply Voltage (V_{DD}) due to the voltage divider. Thus Reverse Transfer Capacitance (C_{rss}) or Gate–Drain Capacitance (C_{gd}) is charged to $V_{GG} + V_{DS}$.

During the turn–on interval, Gate–Source Capacitance (C_{gs}) discharges through the series combination of R_{Gen} and R_K. C_{gd} must discharge to $V_{DS(on)}$ through R_G and R_K in series with the parallel combination of effective load impedance (R'_D) and Drain–Source Resistance (r_{ds}). During the turn–off, this charge flow is reversed.

Predicting turn–on time is somewhat difficult as the channel resistance r_{ds} is a function of the gate–source voltage. While C_{gs} discharges, V_{GS} approaches zero and r_{ds} decreases. Since C_{gd} discharges through r_{ds}, turn–on time is non–linear. During turn–off, the situation is reversed with r_{ds} increasing as C_{gd} charges.

The above switching curves show two impedance conditions: 1) R_K is equal to R_D' which simulates the switching behavior of cascaded stages where the driving source impedance is normally the load impedance of the previous stage, and 2) $R_K = 0$ (low impedance) the driving source impedance is that of the generator.

OBSOLETE
THIS DEVICE IS OBSOLETE
PLEASE CONTACT YOUR onsemi
REPRESENTATIVE FOR INFORMATION

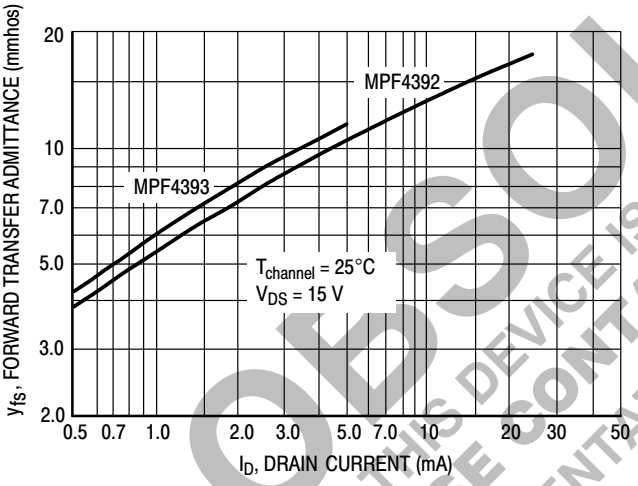

Figure 6. Typical Forward Transfer Admittance

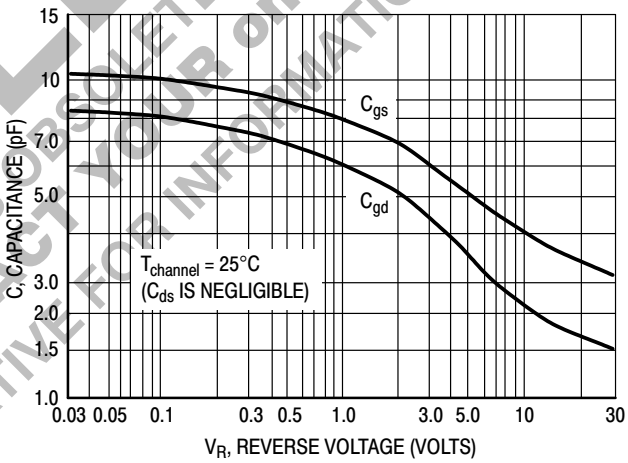

Figure 7. Typical Capacitance

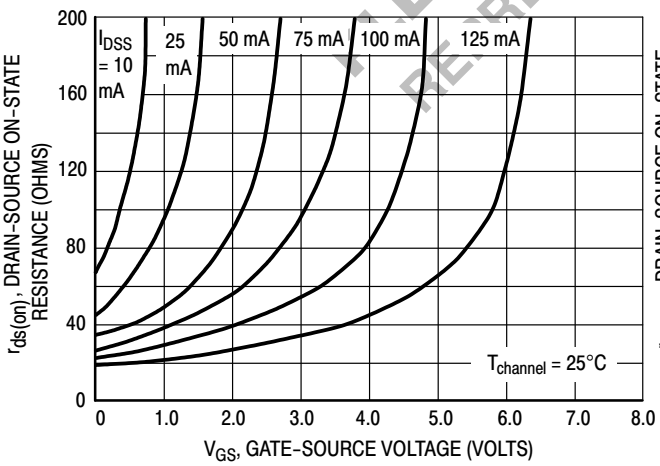

Figure 8. Effect of Gate–Source Voltage On Drain–Source Resistance

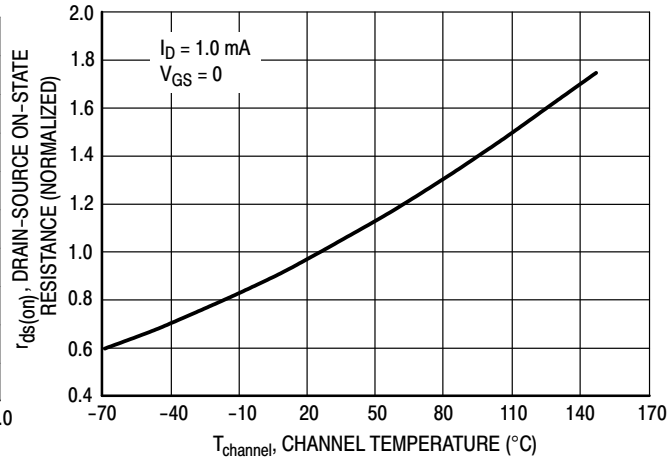

Figure 9. Effect of Temperature On Drain–Source On–State Resistance

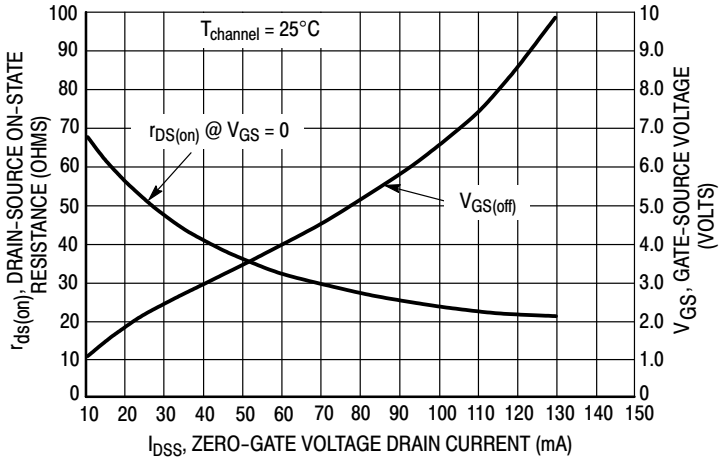

Figure 10. Effect of I_{DSS} On Drain−Source Resistance and Gate−Source Voltage

NOTE 2

The Zero−Gate−Voltage Drain Current (I_{DSS}), is the principle determinant of other J−FET characteristics. Figure 10 shows the relationship of Gate−Source Off Voltage ($V_{GS(off)}$) and Drain−Source On Resistance ($r_{ds(on)}$) to I_{DSS}. Most of the devices will be within ±10% of the values shown in Figure 10. This data will be useful in predicting the characteristic variations for a given part number.

For example:

Unknown

$r_{ds(on)}$ and V_{GS} range for an MPF4392

The electrical characteristics table indicates that an MPF4392 has an I_{DSS} range of 25 to 75 mA. Figure 10 shows $r_{ds(on)}$ = 52 Ω for I_{DSS} = 25 mA and 30 Ω for I_{DSS} 75 mA. The corresponding V_{GS} values are 2.2 V and 4.8 V.

OBSOLETE
THIS DEVICE IS OBSOLETE
PLEASE CONTACT YOUR onsemi
REPRESENTATIVE FOR INFORMATION

PACKAGE DIMENSIONS

TO−92 (TO−226)
CASE 29−11
ISSUE AM

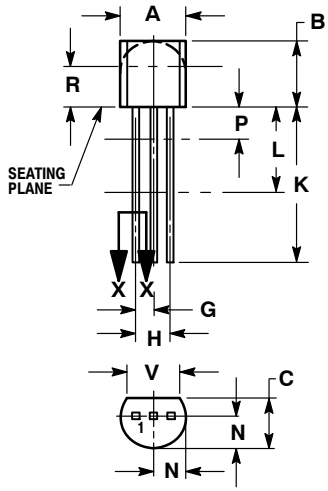

STRAIGHT LEAD
BULK PACK

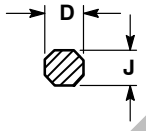

SECTION X−X

NOTES:
1. DIMENSIONING AND TOLERANCING PER ANSI Y14.5M, 1982.
2. CONTROLLING DIMENSION: INCH.
3. CONTOUR OF PACKAGE BEYOND DIMENSION R IS UNCONTROLLED.
4. LEAD DIMENSION IS UNCONTROLLED IN P AND BEYOND DIMENSION K MINIMUM.

	INCHES		MILLIMETERS	
DIM	MIN	MAX	MIN	MAX
A	0.175	0.205	4.45	5.20
B	0.170	0.210	4.32	5.33
C	0.125	0.165	3.18	4.19
D	0.016	0.021	0.407	0.533
G	0.045	0.055	1.15	1.39
H	0.095	0.105	2.42	2.66
J	0.015	0.020	0.39	0.50
K	0.500	---	12.70	---
L	0.250	---	6.35	---
N	0.080	0.105	2.04	2.66
P	---	0.100	---	2.54
R	0.115	---	2.93	---
V	0.135	---	3.43	---

STYLE 5:
PIN 1. DRAIN
2. SOURCE
3. GATE

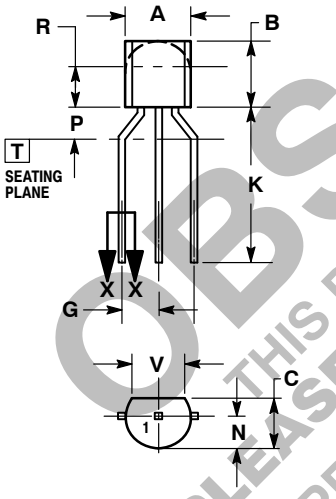

BENT LEAD
TAPE & REEL
AMMO PACK

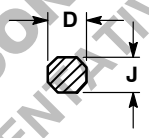

SECTION X−X

NOTES:
1. DIMENSIONING AND TOLERANCING PER ASME Y14.5M, 1994.
2. CONTROLLING DIMENSION: MILLIMETERS.
3. CONTOUR OF PACKAGE BEYOND DIMENSION R IS UNCONTROLLED.
4. LEAD DIMENSION IS UNCONTROLLED IN P AND BEYOND DIMENSION K MINIMUM.

	MILLIMETERS	
DIM	MIN	MAX
A	4.45	5.20
B	4.32	5.33
C	3.18	4.19
D	0.40	0.54
G	2.40	2.80
J	0.39	0.50
K	12.70	---
N	2.04	2.66
P	1.50	4.00
R	2.93	---
V	3.43	---

OBSOLETE
THIS DEVICE IS OBSOLETE
PLEASE CONTACT YOUR
REPRESENTATIVE FOR INFORMATION

ON Semiconductor and ON are registered trademarks of Semiconductor Components Industries, LLC (SCILLC). SCILLC reserves the right to make changes without further notice to any products herein. SCILLC makes no warranty, representation or guarantee regarding the suitability of its products for any particular purpose, nor does SCILLC assume any liability arising out of the application or use of any product or circuit, and specifically disclaims any and all liability, including without limitation special, consequential or incidental damages. “Typical” parameters which may be provided in SCILLC data sheets and/or specifications can and do vary in different applications and actual performance may vary over time. All operating parameters, including “Typicals” must be validated for each customer application by customer’s technical experts. SCILLC does not convey any license under its patent rights nor the rights of others. SCILLC products are not designed, intended, or authorized for use as components in systems intended for surgical implant into the body, or other applications intended to support or sustain life, or for any other application in which the failure of the SCILLC product could create a situation where personal injury or death may occur. Should Buyer purchase or use SCILLC products for any such unintended or unauthorized application, Buyer shall indemnify and hold SCILLC and its officers, employees, subsidiaries, affiliates, and distributors harmless against all claims, costs, damages, and expenses, and reasonable attorney fees arising out of, directly or indirectly, any claim of personal injury or death associated with such unintended or unauthorized use, even if such claim alleges that SCILLC was negligent regarding the design or manufacture of the part. SCILLC is an Equal Opportunity/Affirmative Action Employer. This literature is subject to all applicable copyright laws and is not for resale in any manner.

PUBLICATION ORDERING INFORMATION

LITERATURE FULFILLMENT:
Literature Distribution Center for ON Semiconductor
P.O. Box 5163, Denver, Colorado 80217 USA
Phone: 303−675−2175 or 800−344−3860 Toll Free USA/Canada
Fax: 303−675−2176 or 800−344−3867 Toll Free USA/Canada
Email: orderlit@onsemi.com

N. American Technical Support: 800−282−9855 Toll Free USA/Canada
Europe, Middle East and Africa Technical Support:
Phone: 421 33 790 2910
Japan Customer Focus Center
Phone: 81−3−5817−1050

ON Semiconductor Website: **www.onsemi.com**

Order Literature: http://www.onsemi.com/orderlit

For additional information, please contact your local Sales Representative

Looking for pricing, stock, or lifecycle information?

Click below to explore more details on WIN SOURCE:

- View MPF4392 on WIN SOURCE
- ON Semiconductor Information

Optimize Your Supply Chain with WIN SOURCE Solutions

- Global Sourcing Solution
- Obsolete Management
- Cost Control Management
- Shortage Management
- Alternative Solution
- Excess Inventory Management