Structure : Silicon Monolithic Integrated Circuit
Product Name : Power Driver For Compact Disc Players

Device Name : **BA5826FP**

Features :
- 4-ch BTL driver
- Use of an HSOP28 power package can achieve downsizing of the set.
- Gain can be controlled by attaching an external resistance.
- A built-in thermal shutdown circuit installed.
- A built-in 3.3V regulator installed. (External PNP Tr must be installed.)
- A built-in general operational amplifier installed.
- A built-in 2.7V reset circuit installed.
- Using an external capacitor, the reset delay time can be changed.

○ ABSOLUTE MAXIMUM RATINGS (Ta=25°C)]

Parameter	Symbol	Limits	Unit
Power Supply Voltage	VCC	13.5	V
Power Dissipation	Pd	1.7 *1	W
Operating Temperature Range	Topr	-35 to 85	°C
Storage Temperature Range	Tstg	-55 to 150	°C

*1 When mounted on the glass/epoxy board with the size: 70 mm×70 mm, the thickness: 1.6 mm, and the rate of copper foil occupancy area: 3% or less.
Over Ta=25°C, derating at the rate of 13.6mW/°C.

○ OPERATING CONDITIONS

Parameter	Symbol	Limits	Unit
Power Supply Voltage	VCC	4.5 to 9	V

This product has not been checked for the strategic materials (or service) defined in the Foreign Exchange and Foreign Trade Control Low of Japan so that a verification work is required before exporting it.
Not designed for radiation resistance.

○ ELECTRIC CHARACTERISTICS (Ta=25°C, Vcc=8V, VBIAS=1.65V, R_L=8Ω, unless otherwise noted.)

Parameter	Symbol	MIN.	TYP.	MAX	Unit	Condition
Circuit Current at no signal	ICC	6.0	10.0	14.0	MA	No load applied
<CH1>						
Output Offset Voltage	VOO1	-50	-	50	MV	
Maximum Output Amplitude	VOM1	4.35	5.0	-	V	VBIAS=4V
Closed Circuit Voltage Gain	GVC1	6.0	8.0	10.0	DB	
<CH2, 3, 4>						
Output Offset Voltage	VOO2	-50	-	50	mV	
Maximum Output Amplitude	VOM2	4.3	4.9	-	V	VBIAS=4V
Closed Circuit Voltage Gain	GVC2	7.0	8.0	9.0	dB	
<Mute>						
Mute OFF Voltage	VMTOFF	2.0	-	-	V	
Mute ON Voltage	VMTON	-	-	0.5	V	
Bias Drop Mute Threshold Voltage	VBTHR	-	0.7	1.2	V	
<3.3V Regulator >						
Output Voltage	Vreg	3.13	3.3	3.47	V	IL=100mA
Output Load Regulation	ΔVRL	-20	0	10	mV	IL=100 to 200mA
Power Supply Voltage Regulation	ΔVVCC	-10	0	35	mV	(Vcc=6 to 9V) IL=100mA
<Operational Amplifier>						
Offset Voltage	VOFOP	-6	-	6	mV	
Input Bias Current	IBIAS	-	-	300	nA	
High-level Output Voltage	VOHOP	7.5	-	-	V	VBIAS=4V
Low-level Output Voltage	VOLOP	-	-	0.3	V	VBIAS=4V
Output Driving Current Source	ISOU	300	500	-	μA	VBIAS=4V
Output Driving Current Sink	ISIN	1	-	-	mA	VBIAS=4V
<Reset Output>						
Reset ON Threshold Voltage	VTHR	2.56	2.7	2.84	V	When Vreg drops
Reset ON Output Voltage	VRON	-	-	0.5	V	Connected to 3.3V with the resistance of 10kΩ applied.
<Reset τ Output>						
<Reset τ Current>	IREST	16.6	23.7	30.8	μA	
Reset τ Threshold Voltage H	VRESTH	7.7	-	-	V	VREST=1.5V
Reset τ Threshold Voltage L	VRESTL	-	-	0.4	V	VREST=1V

○ OUTLINE DIMENSIONS, SYMBOLS

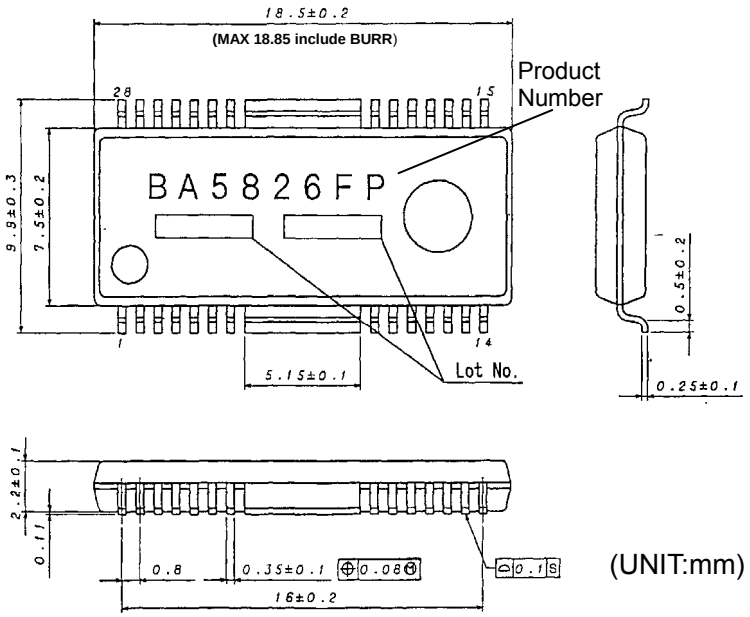

(UNIT:mm)

○ APPLICATION CIRCUIT DIAGRAM

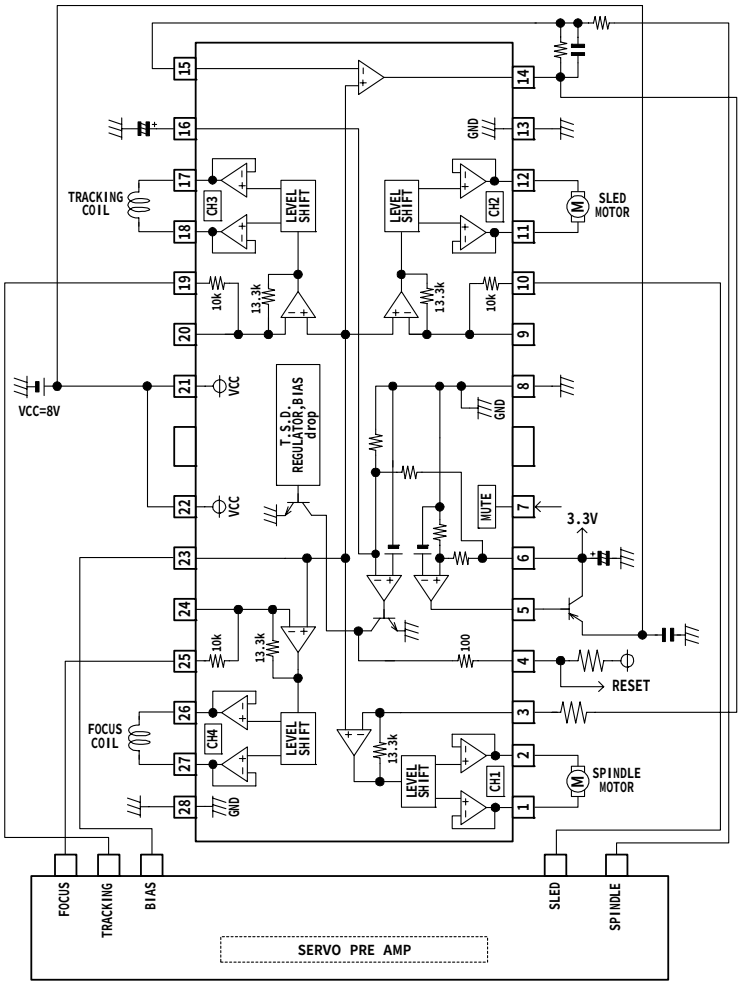

CH1: SPINDLE
CH2: SLED
CH3: TRACKING
CH4: FOCUS
T. S. D.: Thermal shutdown
Resistance unit: [Ω]

○ PIN NUMBERS, PIN NAMES

No.	Pin Name	Description	No.	Pin Name	Description
1	VO1(-)	Driver CH1 negative output	15	OPIN	Operational amplifier inverted input
2	VO1(+)	Driver CH1 positive output	16	RESETτ	Reset τ terminal
3	IN1	CH1 input terminal	17	VO3(-)	Driver CH3 negative output
4	RESET	Reset output	18	VO3(+)	Driver CH3 positive output
5	REGB	Regulator external Tr base connection terminal	19	IN3	CH3 input terminal
6	REGOUT	Regulator output	20	IN3’	CH3 input terminal for gain control
7	MUTE	Driver mute control terminal	21	VCC	Power supply input
8	GND	PREGND, REGGND	22	VCC	Power supply input
9	IN2’	CH2 input terminal for gain control	23	BIAS	Bias input
10	IN2	CH2 input terminal	24	IN4’	CH4 input terminal for gain control
11	VO2(+)	Driver CH2 positive output	25	IN4	CH4 input terminal
12	VO2(-)	Driver CH2 negative output	26	VO4(+)	Driver CH4 positive output
13	GND	CH2,3 POWGND	27	VO4(-)	Driver CH4 negative output
14	OPOUT	Operational amplifier output	28	GND	CH1,4 POWGND

Note: The positive or negative polarity of driver outputs is determined by the input polarity.
When the signal H is applied to the input pin, the negative output pin outputs L and the positive output pin outputs H.

CAUTIONS ON USE

(1) Relationship between the mute function and the reset output

Function	Driver Mute Operation	Reset output
Regulator voltage drop	ON in all cases	'H'→'L'
Bias voltage drop		'H'→'L'
Thermal shutdown		'H'→'L'
Mute (pin 7)		Constant

[Regulator Voltage Drop]
When the regulator voltage drops to 2.7V (typ.) or less, the reset output will become 'L' while the mute function will turn ON and, when the voltage recovers to 2.9V (typ.) or above, the reset output will become 'H' while the mute function will turn OFF.
[Bias Drop]
When the bias terminal (pin 23) voltage has dropped to 0.7V (typ.) or less, the mute function will turn ON while the reset output will become 'L'. Under conditions of normal use, it should be set to 1.2V or above.
[Thermal Shutdown]
When the chip temperature has reached to 175°C (typ.) or above, the mute function will turn ON while the reset output will become 'L'. Ten the chip temperature has dropped to 150°C (typ.) or less, the mute function will turn OFF while the reset output will become 'H'.
[Mute]
When the mute terminal (pin 7) voltage has set to open or dropped to 0.5V (typ.) or less, the mute function will turn ON while the reset output will not change.

(2) About reset τ terminal
Inserting a capacitor between the reset τ terminal (pin 16) and GND can set the delay time for the reset output.
The delay time t [sec] can be expressed by the following equation, where C[F] is a capacitance of the capacitor to be connected;
t=CV/I
When V=1.14[V], I=23.7[μA] (typ.) and the capacitor with the capacitance of 4.7 μF is connected, the delay time will become approximately 220msec.

(3) Thermal shutdown (TSD), mute ON, bias terminal voltage drop, or regulator voltage drop will activate the mute function, where only the driver part can be muted. While muting, the voltage at the output terminal will equal to the internal bias voltage (approximately (VCC-VF) / 2).

(4) The capacitor installed between the regulator output (pin 6) and GND also serves as an anti-oscillation capacitor and therefore, it is required to have high performance in the temperature characteristics.

(5) While the regulator is not in use, the regulator output terminal (pin 6) must be shorted to VCC and the regulator external Tr base connection terminal (pin 5) must be open.

(6) The radiating FIN must be connected to the external GND.

(7) Short-circuits between output pin-VCC, output pin-GND, or output terminals (load short) must be avoided. Make sure that the ICs are installed on the board in proper directions.
Mounting the ICs in improper directions may damage them or produce smoke.

(8) About absolute maximum ratings
Exceeding the absolute maximum ratings, such as the applied voltage or the operating temperature range, may cause permanent device damage. As these cases cannot be limited to the broken short mode or the open mode, if a special mode where the absolute maximum ratings may be exceeded is assumed, it is recommended to take mechanical safety measures such as attaching fuses.

(9) About power supply lines
As a measure against the back current regenerated by a counter electromotive force of the motor, a capacitor to be used as a regenerated-current path can be installed between the power supply and GND and its capacitance value should be determined after careful check that any problems, for example, a leak capacitance of the electrolytic capacitor at low temperature, are not found in various characteristics.

(10) About GND potential
The electric potential of the GND terminal must be kept lowest in the circuitry at any operation states.

(11) About thermal design
With consideration of the power dissipation (Pd) under conditions of actual use, a thermal design

provided with an enough margin should be done.

(12) About operations in a strong electric field
When used in a strong electric field, note that a malfunction may occur.

(13) ASO
When using this IC, the output Tr. must be set not to exceed the values specified in the absolute maximum ratings and ASO.

(14) Thermal shutdown circuit
This IC incorporates a thermal shutdown circuit (TSD circuit). When the chip temperature reaches the value shown below, the coil output to the motor will be set to open.
The thermal shutdown circuit is designed only to shut off the IC from a thermal runaway and not intended to protect or guarantee the entire IC functions.
Therefore, users cannot assume that the TSD circuit once activated can be used continuously in the subsequent operations.

TSD ON Temperature [°C] (typ.)	Hysteresis Temperature [°C] (typ.)
175	25

(15) About earth wiring patterns
When a small signal GND and a large current GND are provided, it is recommended that the large current GND pattern and the small signal GND pattern should be separated and grounded at a single point of the reference point of the set in order to prevent the voltage of the small signal GND from being affected by a voltage change caused by the resistance of the pattern wiring and the large current.
Make sure that the GND wiring patterns of the external components will not change, too.

(16) This IC is a monolithic IC which has a P^+ isolations and P substrate to isolate elements each other.
This P layer and an N layer in each element form a PN junction to construct various parasitic elements.
Due to the IC structure, the parasitic elements are inevitably created by the potential relationship.
Activation of the parasitic elements can cause interference between circuits and may result in a malfunction or, consequently, a fatal damage. Therefore, make sure that the IC must not be used under conditions that may activate the parasitic elements, for example, applying the lower voltage than the ground level (GND, P substrate) to the input terminals.
Note that, while not applying the power supply voltage to the IC, any voltage must not be applied to the input terminals. In addition, do not applying the voltage to input terminals without applying the power supply voltage to the IC. Also while applying the power supply voltage, each input terminal must be the power supply voltage or less; or within the guaranteed values in the electric characteristics.

Notes

- No technical content pages of this document may be reproduced in any form or transmitted by any means without prior permission of ROHM CO.,LTD.
- The contents described herein are subject to change without notice. The specifications for the product described in this document are for reference only. Upon actual use, therefore, please request that specifications to be separately delivered.
- Application circuit diagrams and circuit constants contained herein are shown as examples of standard use and operation. Please pay careful attention to the peripheral conditions when designing circuits and deciding upon circuit constants in the set.
- Any data, including, but not limited to application circuit diagrams information, described herein are intended only as illustrations of such devices and not as the specifications for such devices. ROHM CO.,LTD. disclaims any warranty that any use of such devices shall be free from infringement of any third party's intellectual property rights or other proprietary rights, and further, assumes no liability of whatsoever nature in the event of any such infringement, or arising from or connected with or related to the use of such devices.
- Upon the sale of any such devices, other than for buyer's right to use such devices itself, resell or otherwise dispose of the same, no express or implied right or license to practice or commercially exploit any intellectual property rights or other proprietary rights owned or controlled by
- ROHM CO., LTD. is granted to any such buyer.
- Products listed in this document are no antiradiation design.

The products listed in this document are designed to be used with ordinary electronic equipment or devices (such as audio visual equipment, office-automation equipment, communications devices, electrical appliances and electronic toys).
Should you intend to use these products with equipment or devices which require an extremely high level of reliability and the malfunction of which would directly endanger human life (such as medical instruments, transportation equipment, aerospace machinery, nuclear-reactor controllers, fuel controllers and other safety devices), please be sure to consult with our sales representative in advance.
It is our top priority to supply products with the utmost quality and reliability. However, there is always a chance of failure due to unexpected factors. Therefore, please take into account the derating characteristics and allow for sufficient safety features, such as extra margin, anti-flammability, and fail-safe measures when designing in order to prevent possible accidents that may result in bodily harm or fire caused by component failure. ROHM cannot be held responsible for any damages arising from the use of the products under conditions out of the range of the specifications or due to non-compliance with the NOTES specified in this catalog.

Thank you for your accessing to ROHM product informations.
More detail product informations and catalogs are available, please contact your nearest sales office.

ROHM Customer Support System **THE AMERICAS** / **EUPOPE** / **ASIA** / **JAPAN**

www.rohm.com **Contact us** : webmaster@rohm.co.jp

Copyright © 2007 ROHM CO.,LTD.
ROHM CO., LTD. 21, Saiin Mizosaki-cho, Ukyo-ku, Kyoto 615-8585, Japan
TEL : +81-75-311-2121
FAX : +81-75-315-0172

Looking for pricing, stock, or lifecycle information?

Click below to explore more details on WIN SOURCE:

- View BA5826FP on WIN SOURCE
- Rohm Semiconductor Information

Optimize Your Supply Chain with WIN SOURCE Solutions

- Global Sourcing Solution
- Obsolete Management
- Cost Control Management
- Shortage Management
- Alternative Solution
- Excess Inventory Management