Structure : Silicon Monolithic Integrated Circuit

Product : Band-pass filter for spectrum analyzer for car audio systems

Type : **BA3830F**

Function : 1. Built-in band pass filter for spectrum analyzer
2. Designed for 5V microcomputer power voltage
3. SOP18 package requiring few external parts

Absolute Maximum Ratings (Ta=25℃)

Parameter	Symbol	Rating	Unit
Power Supply voltage	Vcc	9	V
Power dissipation	Pd	450※	mW
Operating temperature	Topr	−25～+75	℃
Storage temperature	Tstg	−55～+125	℃

※This value decreases 4.5 mW/℃ for Ta=25℃ or more.

Operating Voltage Range（Ta＝25℃）

Parameter	Symbol	Min.	Typ.	Max.	Unit
Power supply voltage	Vcc	4.5	−	8.0	V

Application example

Note that ROHM cannot provide adequate confirmation of patents.

The product described in this specification is designed to be used with ordinary electronic equipment or devices (such as audio-visual equipment, office-automation equipment, communications devices, electrical appliances, and electronic toys).

Should you intend to use this product with equipment or devices which require an extremely high level of reliability and the malfunction of which would directly endanger human life (such as medical instruments, transportation equipment, aerospace machinery, nuclear-reactor controllers, fuel controllers and other safety devices), please be sure to consult with our sales representative in advance.

Electrical Characteristics

(Unless specified particularly, Ta=25℃, V_{CC}=5V, R_L=10MΩ, Rφ$_1$=270kΩ, Rφ$_2$=270kΩ)

Parameter	Symbol	Limit			Unit	Conditions
		Min.	Typ.	Max.		
Quiescent current	I_Q	—	3.8	5.2	mA	
Reference output level(LEVEL)	V_{ol}	−3	0	3	dB	V_{IN}=−30dBV、V_O=1.5V(0dB) When f=center frequencies is input
Max. output level(LEVEL)	V_{olMax}	3.2	4.2	—	V	V_{IN}=−14dBV, When f=center frequencies is input
Reference output level(REC LEVEL)	V_{or}	−3	0	3	dB	V_{IN}=−30dBV、V_O=1.5V(0dB) f=1kHz
Max. output level(REC LEVEL)	V_{orMax}	3.8	4.8	—	V	V_{IN}=−14dBV、f=1kHz
Output offset voltage	V_{off}	—	30	90	mV	With no signal
Center frequency 1	fo1	49	63	77	Hz	V_{IN}=−30dBV
Center frequency 2	fo2	117	150	183	Hz	V_{IN}=−30dBV
Center frequency 3	fo3	257	330	403	Hz	V_{IN}=−30dBV
Center frequency 4	fo4	0.78	1	1.22	kHz	V_{IN}=−30dBV
Center frequency 5	fo5	2.55	3.3	4.03	kHz	V_{IN}=−30dBV
Center frequency 6	fo6	7.8	10	12.2	kHz	V_{IN}=−30dBV
Input current when Reset pin is HIGH	I_{IN}	150	215	280	μA	V_{th}=5V
Threshold level when Reset pin is ON	V_{th}	—	1.4	1.8	V	
Threshold level when Reset pin is OFF	V_{th}	1.0	1.4	—	V	

※Q is set to 4.5.

◎ Not designed for radiation resistance.

Outline Dimension

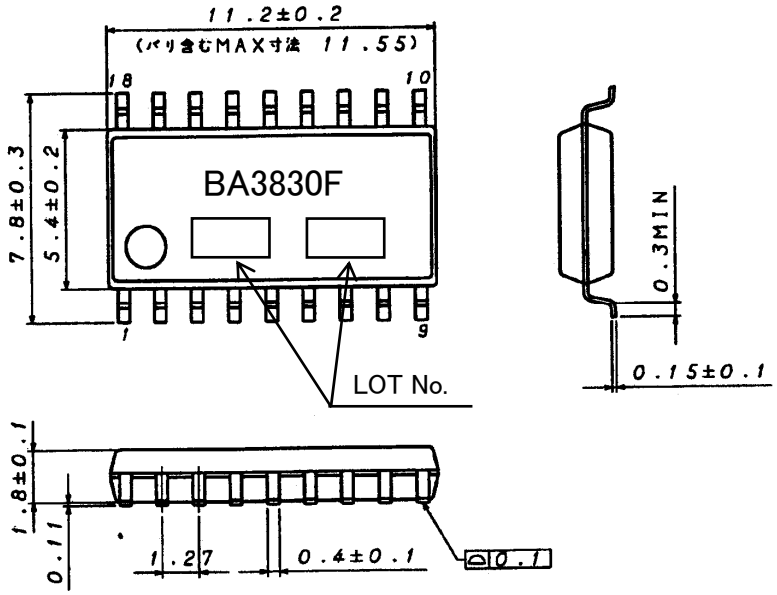

SOP18 (Unit:mm)

Block Diagram

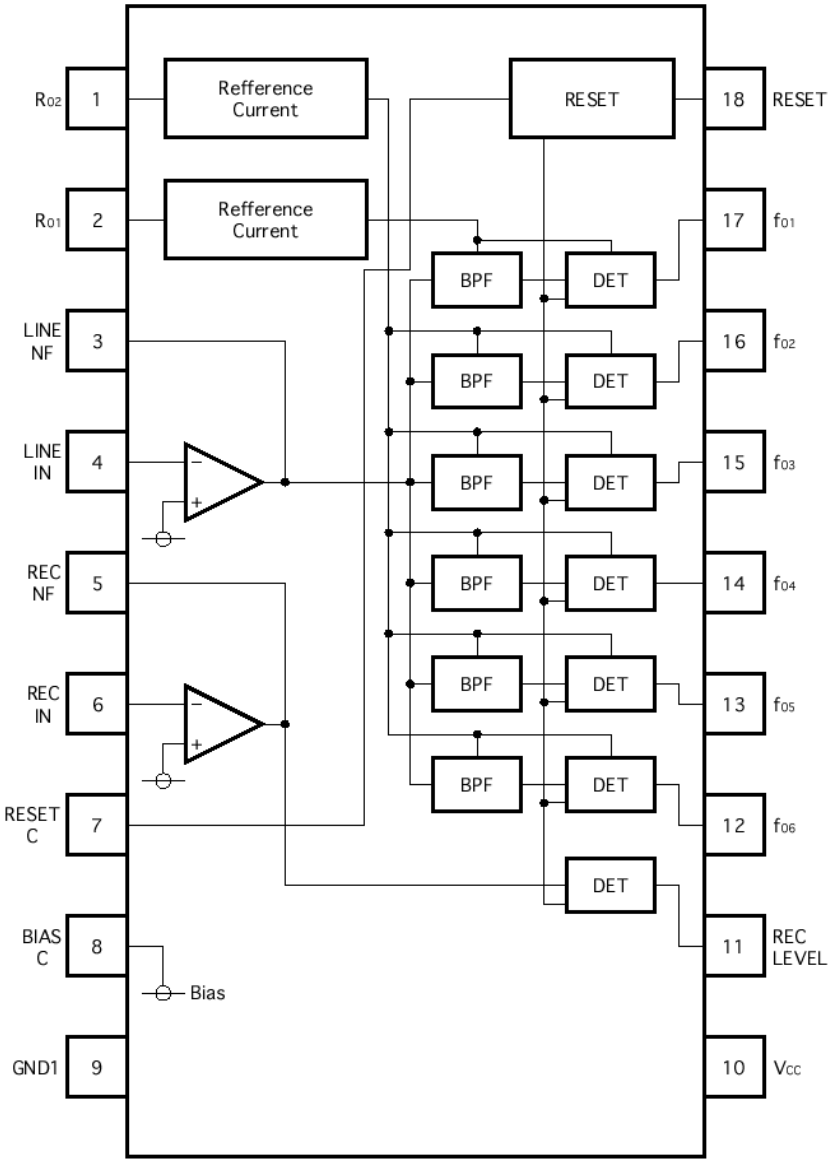

Terminal Number/ Terminal Name

Terminal Number	Terminal Name	Terminal Number	Terminal Name	Terminal Number	Terminal Name
1	Ro_2	7	RESETC	13	fo_5
2	Ro_1	8	BASIC	14	fo_4
3	LINENF	9	GND1	15	fo_3
4	LINEIN	10	VCC	16	fo_2
5	RECNF	11	RECLEVLE	17	fo_1
6	RECIN	12	fo_6	18	RESET

Application example

(1) Numbers and data in entries are representative design values and are not guaranteed values of the items.
(2) Although we are confident in recommending the sample application circuits, carefully check their characteristics further when using them. When modifying externally attached component constants before use, determine them so that they have sufficient margins by taking into account variations in externally attached components and the Rohm LSI, not only for static characteristics but also including transient characteristics.
(3) Absolute maximum ratings
If applied voltage, operating temperature range, or other absolute maximum ratings are exceeded, the LSI may be damaged. Do not apply voltages or temperatures that exceed the absolute maximum ratings. If you think of a case in which absolute maximum ratings are exceeded, enforce fuses or other physical safety measures and investigate how not to apply the conditions under which absolute maximum ratings are exceeded to the LSI.
(4) GND potential
Make the GND pin voltage such that it is the lowest voltage even when operating below it. Actually confirm that the voltage of each pin does not become a lower voltage than the GND pin, including transient phenomena.
(5) Thermal design
Perform thermal design in which there are adequate margins by taking into account the allowable power dissipation in actual states of use.
(6) Shorts between pins and misinstallation
When mounting the LSI on a board, pay adequate attention to orientation and placement discrepancies of the LSI. If it is misinstalled and the power is turned on, the LSI may be damaged. It also may be damaged if it is shorted by a foreign substance coming between pins of the LSI or between a pin and a power supply or a pin and a GND.
(7) Operation in strong magnetic fields
Adequately evaluate use in a strong magnetic field, since there is a possibility of malfunction.

Notes

No copying or reproduction of this document, in part or in whole, is permitted without the consent of ROHM Co.,Ltd.

The content specified herein is subject to change for improvement without notice.

The content specified herein is for the purpose of introducing ROHM's products (hereinafter "Products"). If you wish to use any such Product, please be sure to refer to the specifications, which can be obtained from ROHM upon request.

Examples of application circuits, circuit constants and any other information contained herein illustrate the standard usage and operations of the Products. The peripheral conditions must be taken into account when designing circuits for mass production.

Great care was taken in ensuring the accuracy of the information specified in this document. However, should you incur any damage arising from any inaccuracy or misprint of such information, ROHM shall bear no responsibility for such damage.

The technical information specified herein is intended only to show the typical functions of and examples of application circuits for the Products. ROHM does not grant you, explicitly or implicitly, any license to use or exercise intellectual property or other rights held by ROHM and other parties. ROHM shall bear no responsibility whatsoever for any dispute arising from the use of such technical information.

The Products specified in this document are intended to be used with general-use electronic equipment or devices (such as audio visual equipment, office-automation equipment, communication devices, electronic appliances and amusement devices).

The Products specified in this document are not designed to be radiation tolerant.

While ROHM always makes efforts to enhance the quality and reliability of its Products, a Product may fail or malfunction for a variety of reasons.

Please be sure to implement in your equipment using the Products safety measures to guard against the possibility of physical injury, fire or any other damage caused in the event of the failure of any Product, such as derating, redundancy, fire control and fail-safe designs. ROHM shall bear no responsibility whatsoever for your use of any Product outside of the prescribed scope or not in accordance with the instruction manual.

The Products are not designed or manufactured to be used with any equipment, device or system which requires an extremely high level of reliability the failure or malfunction of which may result in a direct threat to human life or create a risk of human injury (such as a medical instrument, transportation equipment, aerospace machinery, nuclear-reactor controller, fuel-controller or other safety device). ROHM shall bear no responsibility in any way for use of any of the Products for the above special purposes. If a Product is intended to be used for any such special purpose, please contact a ROHM sales representative before purchasing.

If you intend to export or ship overseas any Product or technology specified herein that may be controlled under the Foreign Exchange and the Foreign Trade Law, you will be required to obtain a license or permit under the Law.

ROHM SEMICONDUCTOR

Thank you for your accessing to ROHM product informations.
More detail product informations and catalogs are available, please contact us.

ROHM Customer Support System

http://www.rohm.com/contact/

© 2011 ROHM Co., Ltd. All rights reserved.

Looking for pricing, stock, or lifecycle information?

Click below to explore more details on WIN SOURCE:

- View BA3830F-E2 on WIN SOURCE
- Rohm Semiconductor Information

Optimize Your Supply Chain with WIN SOURCE Solutions

- Global Sourcing Solution
- Obsolete Management
- Cost Control Management
- Shortage Management
- Alternative Solution
- Excess Inventory Management