THE DATASHEET OF

SN74LS42N

www.win-source.net 0086-755-83957316

SDLS109 – MARCH 1974 – REVISED MARCH 1988

- **All Outputs Are High for Invalid Input Conditions**
- **Also for Application as**
  4-Line-to-16-Line Decoders
  3-Line-to-8-Line Decoders
- **Diode-Clamped Inputs**

TYPES	TYPICAL POWER DISSIPATION	TYPICAL PROPAGATION DELAYS
'42A	140 mW	17 ns
'LS42	35 mW	17 ns

SN5442A, SN54LS42 . . . J OR W PACKAGE
SN7442A . . . N PACKAGE
SN74LS42 . . . D OR N PACKAGE
(TOP VIEW)

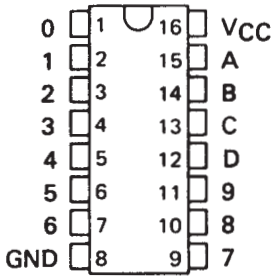

SN54LS42 . . . FK PACKAGE
(TOP VIEW)

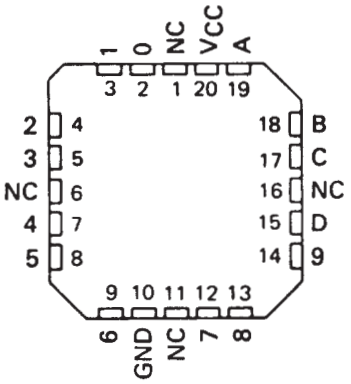

NC - No internal connection

description

These monolithic BCD-to-decimal decoders consist of eight inverters and ten four-input NAND gates. The inverters are connected in pairs to make BCD input data available for decoding by the NAND gates. Full decoding of valid input logic ensures that all outputs remain off for all invalid input conditions.

The '42A and 'LS42 feature inputs and outputs that are compatible for use with most TTL and other saturated low-level logic circuits. DC noise margins are typically one volt.

The SN5442A and SN54LS42 are characterized for operation over the full military temperature range of −55°C to 125°C. The SN7442A and SN74LS42 are characterized for operation from 0°C to 70°C.

PRODUCTION DATA information is current as of publication date. Products conform to specifications per the terms of Texas Instruments standard warranty. Production processing does not necessarily include testing of all parameters.

Copyright © 1988, Texas Instruments Incorporated

logic symbol†

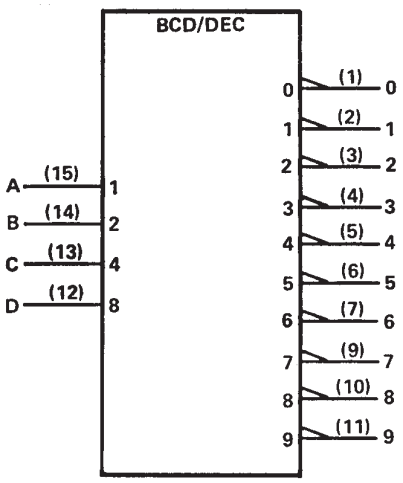

† This symbol is in accordance with ANSI/IEEE Std 91-1984 and IEC Publication 617-12.

logic diagram (positive logic)

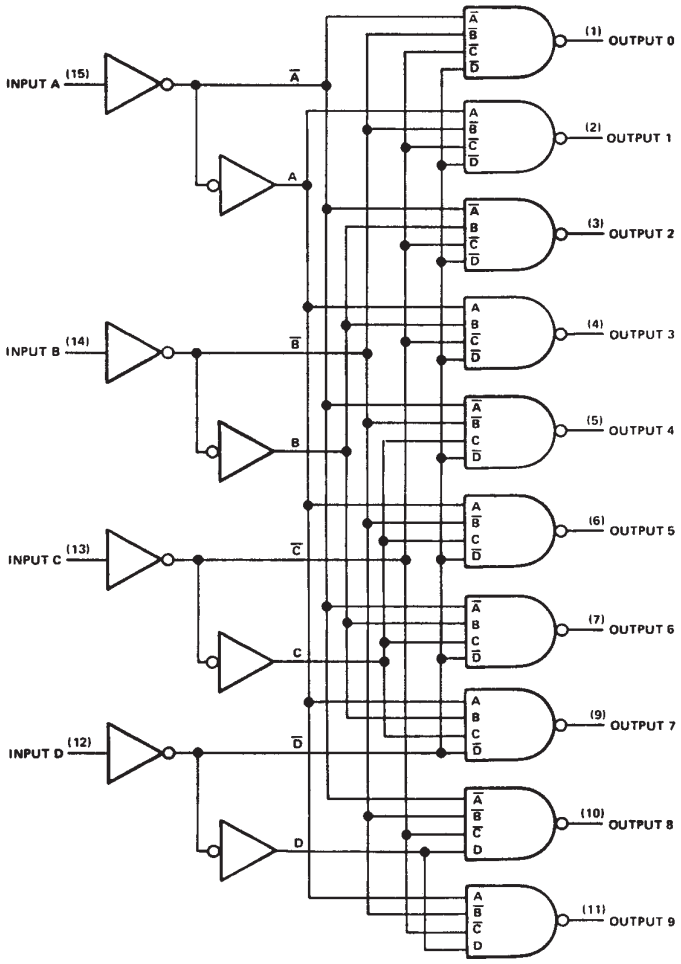

Pin numbers shown are for D, J, N, and W packages.

schematics of inputs and outputs

'42A

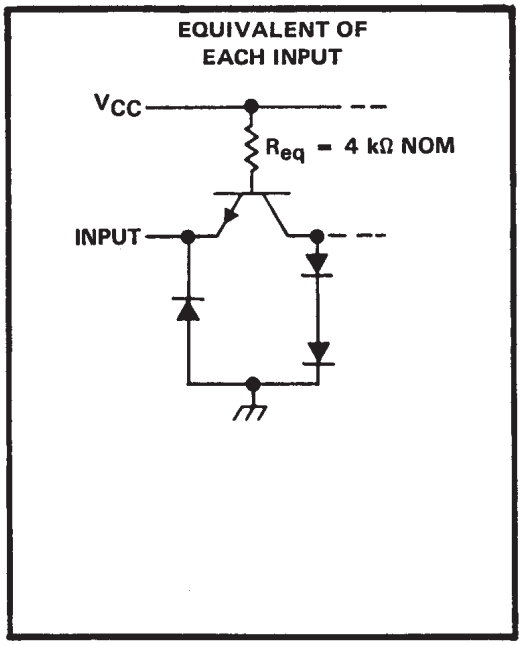

'LS42

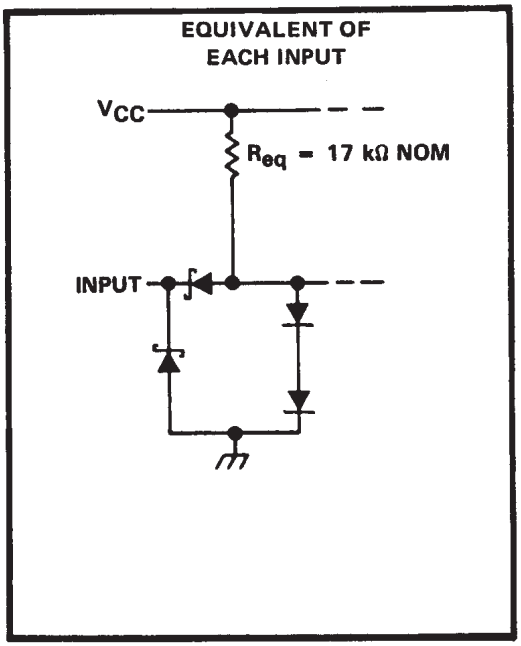

'42A

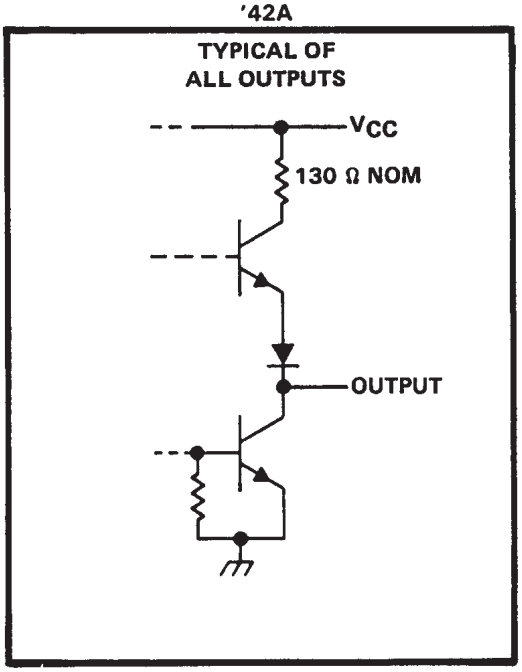

'LS42

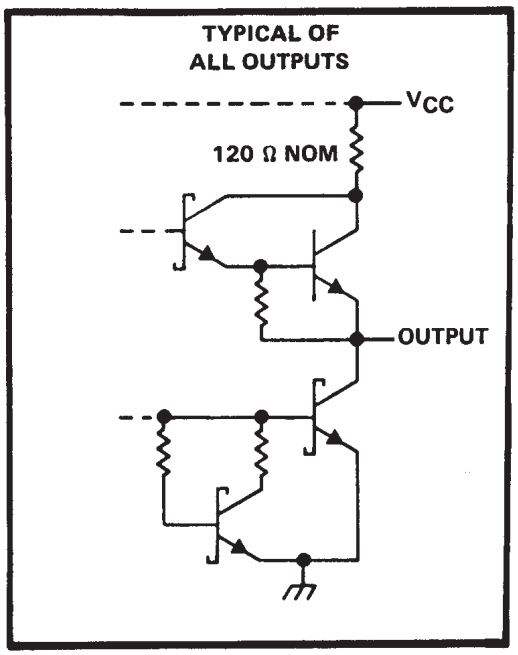

FUNCTION TABLE

NO.	BCD INPUT				DECIMAL OUTPUT									
	D	C	B	A	0	1	2	3	4	5	6	7	8	9
0	L	L	L	L	L	H	H	H	H	H	H	H	H	H
1	L	L	L	H	H	L	H	H	H	H	H	H	H	H
2	L	L	H	L	H	H	L	H	H	H	H	H	H	H
3	L	L	H	H	H	H	H	L	H	H	H	H	H	H
4	L	H	L	L	H	H	H	H	L	H	H	H	H	H
5	L	H	L	H	H	H	H	H	H	L	H	H	H	H
6	L	H	H	L	H	H	H	H	H	H	L	H	H	H
7	L	H	H	H	H	H	H	H	H	H	H	L	H	H
8	H	L	L	L	H	H	H	H	H	H	H	H	L	H
9	H	L	L	H	H	H	H	H	H	H	H	H	H	L
INVALID	H	L	H	L	H	H	H	H	H	H	H	H	H	H
	H	L	H	H	H	H	H	H	H	H	H	H	H	H
	H	H	L	L	H	H	H	H	H	H	H	H	H	H
	H	H	L	H	H	H	H	H	H	H	H	H	H	H
	H	H	H	L	H	H	H	H	H	H	H	H	H	H
	H	H	H	H	H	H	H	H	H	H	H	H	H	H

H = high level, L = low level

absolute maximum ratings over operating free-air temperature range (unless otherwise noted)

Supply voltage, V_{CC} (see Note 1) . . . . . 7 V
Input voltage: '42A . . . . . 5.5 V
'LS42 . . . . . 7 V
Operating free-air temperature range: SN5442A, SN54LS42 . . . . . −55°C to 125°C
SN7442A, SN74LS42 . . . . . 0°C to 70°C
Storage temperature range . . . . . −65°C to 150°C

NOTE 1: Voltage values are with respect to network ground terminal.

recommended operating conditions

	SN5442A			SN7442A			UNIT
	MIN	NOM	MAX	MIN	NOM	MAX	
Supply voltage, V_{CC}	4.5	5	5.5	4.75	5	5.25	V
High-level output current, I_{OH}			−800			−800	μA
Low-level output current, I_{OL}			16			16	mA
Operating free-air temperature, T_A	−55		125	0		70	°C

electrical characteristics over recommended operating free-air temperature range (unless otherwise noted)

PARAMETER		TEST CONDITIONS†	SN5442A			SN7442A			UNIT
			MIN	TYP‡	MAX	MIN	TYP‡	MAX	
V_{IH}	High-level input voltage		2			2			V
V_{IL}	Low-level input voltage				0.8			0.8	V
V_{IK}	Input clamp voltage	V_{CC} = MIN, I_I = −12 mA			−1.5			−1.5	V
V_{OH}	High-level output voltage	V_{CC} = MIN, V_{IH} = 2 V, V_{IL} = 0.8 V, I_{OH} = −800 μA	2.4	3.4		2.4	3.4		V
V_{OL}	Low-level output voltage	V_{CC} = MIN, V_{IH} = 2 V, V_{IL} = 0.8 V, I_{OL} = 16 mA		0.2	0.4		0.2	0.4	V
I_I	Input current at maximum input voltage	V_{CC} = MAX, V_I = 5.5 V			1			1	mA
I_{IH}	High-level input current	V_{CC} = MAX, V_I = 2.4 V			40			40	μA
I_{IL}	Low level input current	V_{CC} = MAX, V_I = 0.4 V			−1.6			−1.6	mA
I_{OS}	Short-circuit output current§	V_{CC} = MAX	−20		−55	−18		−55	mA
I_{CC}	Supply current	V_{CC} = MAX, See Note 2		28	41		28	56	mA

†For conditions shown as MIN or MAX, use the appropriate values specified under recommended operating conditions.
‡All typical values are at V_{CC} = 5 V, T_A = 25°C.
§Not more than one output should be shorted at a time.
NOTE 2: I_{CC} is measured with all outputs open and all inputs grounded.

switching characteristics, V_{CC} = 5 V, T_A = 25°C

PARAMETER		TEST CONDITIONS	MIN	TYP	MAX	UNIT
t_{PHL}	Propagation delay time, high-to-low-level output from A, B, C, or D through 2 levels of logic	C_L = 15 pF, R_L = 400 Ω, See Note 3		14	25	ns
t_{PHL}	Propagation delay time, high-to-low-level output from A, B, C, or D through 3 levels of logic			17	30	ns
t_{PLH}	Propagation delay time, low-to-high-level output from A, B, C, and D through 2 levels of logic			10	25	ns
t_{PLH}	Propagation delay time, low-to-high-level output from A, B, C, and D through 3 levels of logic			17	30	ns

NOTE 3: Load circuits and voltage waveforms are shown in Section 1.

recommended operating conditions

	SN54LS42			SN74LS42			UNIT
	MIN	NOM	MAX	MIN	NOM	MAX	
Supply voltage, V_{CC}	4.5	5	5.5	4.75	5	5.25	V
High-level output current, I_{OH}			–400			–400	μA
Low-level output current, I_{OL}			4			8	mA
Operating free-air temperature, T_A	–55		125	0		70	°C

electrical characteristics over recommended operating free-air temperature range (unless otherwise noted)

PARAMETER		TEST CONDITIONS†		SN54LS42			SN74LS42			UNIT
				MIN	TYP‡	MAX	MIN	TYP‡	MAX	
V_{IH}	High-level input voltage			2			2			V
V_{IL}	Low-level input voltage					0.7			0.8	V
V_{IK}	Input clamp voltage	V_{CC} = MIN, I_I = –18 mA				–1.5			–1.5	V
V_{OH}	High-level output voltage	V_{CC} = MIN, V_{IH} = 2 V, V_{IL} = V_{IL} max, I_{OH} = –400 μA		2.5	3.5		2.7	3.5		V
V_{OL}	Low-level output voltage	V_{CC} = MIN, V_{IH} = 2 V, V_{IL} = V_{IL} max	I_{OL} = 4 mA		0.25	0.4		0.25	0.4	V
			I_{OL} = 8 mA					0.35	0.5	
I_I	Input current at maximum input voltage	V_{CC} = MAX, V_I = 7 V				0.1			0.1	mA
I_{IH}	High-level input current	V_{CC} = MAX, V_I = 2.7 V				20			20	μA
I_{IL}	Low-level input current	V_{CC} = MAX, V_I = 0.4 V				–0.4			–0.4	mA
I_{OS}	Short-circuit output current§	V_{CC} = MAX		–20		–100	–20		–100	mA
I_{CC}	Supply current	V_{CC} = MAX, See Note 2			7	13		7	13	mA

†For conditions shown as MIN or MAX, use the appropriate value specified under recommended operating conditions.
‡All typical values are at V_{CC} = 5 V, T_A = 25°C.
§Not more than one output should be shorted at a time, and duration of the short-circuit should not exceed one second.
NOTE 2. I_{CC} is measured with all outputs open and inputs grounded.

switching characteristics, V_{CC} = 5 V, T_A = 25°C

PARAMETER		TEST CONDITIONS	MIN	TYP	MAX	UNIT
t_{PHL}	Propagation delay time, high-to-low-level output from A, B, C, or D through 2 levels of logic	C_L = 15 pF, R_L = 2 kΩ, See Note 3		15	25	ns
t_{PHL}	Propagation delay time, high-to-low-level output from A, B, C, or D through 3 levels of logic			20	30	ns
t_{PLH}	Propagation delay time, low-to-high-level output from A, B, C, and D through 2 levels of logic			15	25	ns
t_{PLH}	Propagation delay time, low-to-high-level output from A, B, C, and D through 3 levels of logic			20	30	ns

NOTE 3: Load circuits and voltage waveforms are shown in Section 1.

TUBE

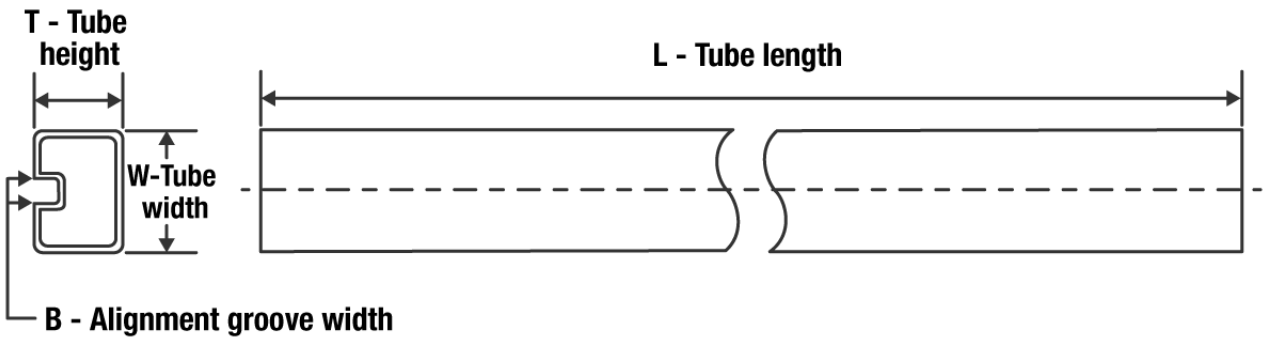

*All dimensions are nominal

Device	Package Name	Package Type	Pins	SPQ	L (mm)	W (mm)	T (µm)	B (mm)
SN74LS42D	D	SOIC	16	40	507	8	3940	4.32
SN74LS42N	N	PDIP	16	25	506	13.97	11230	4.32
SN74LS42N	N	PDIP	16	25	506	13.97	11230	4.32

IMPORTANT NOTICE AND DISCLAIMER

TI PROVIDES TECHNICAL AND RELIABILITY DATA (INCLUDING DATA SHEETS), DESIGN RESOURCES (INCLUDING REFERENCE DESIGNS), APPLICATION OR OTHER DESIGN ADVICE, WEB TOOLS, SAFETY INFORMATION, AND OTHER RESOURCES “AS IS” AND WITH ALL FAULTS, AND DISCLAIMS ALL WARRANTIES, EXPRESS AND IMPLIED, INCLUDING WITHOUT LIMITATION ANY IMPLIED WARRANTIES OF MERCHANTABILITY, FITNESS FOR A PARTICULAR PURPOSE OR NON-INFRINGEMENT OF THIRD PARTY INTELLECTUAL PROPERTY RIGHTS.

These resources are intended for skilled developers designing with TI products. You are solely responsible for (1) selecting the appropriate TI products for your application, (2) designing, validating and testing your application, and (3) ensuring your application meets applicable standards, and any other safety, security, regulatory or other requirements.

These resources are subject to change without notice. TI grants you permission to use these resources only for development of an application that uses the TI products described in the resource. Other reproduction and display of these resources is prohibited. No license is granted to any other TI intellectual property right or to any third party intellectual property right. TI disclaims responsibility for, and you will fully indemnify TI and its representatives against, any claims, damages, costs, losses, and liabilities arising out of your use of these resources.

TI’s products are provided subject to TI’s Terms of Sale or other applicable terms available either on ti.com or provided in conjunction with such TI products. TI’s provision of these resources does not expand or otherwise alter TI’s applicable warranties or warranty disclaimers for TI products.

TI objects to and rejects any additional or different terms you may have proposed.

Mailing Address: Texas Instruments, Post Office Box 655303, Dallas, Texas 75265
Copyright © 2022, Texas Instruments Incorporated

Looking for pricing, stock, or lifecycle information?

Click below to explore more details on WIN SOURCE:

- View SN74LS42N on WIN SOURCE
- Texas Instruments Information

Optimize Your Supply Chain with WIN SOURCE Solutions

- Global Sourcing Solution
- Obsolete Management
- Cost Control Management
- Shortage Management
- Alternative Solution
- Excess Inventory Management