THE DATASHEET OF

EVB_RT8296AHZSP

www.win-source.net 0086-755-83957316

3A, 23V, 340kHz Synchronous Step-Down Converter

General Description

The RT8296A is a high efficiency, monolithic synchronous step-down DC/DC converter that can deliver up to 3A output current from a 4.5V to 23V input supply. The RT8296A's current mode architecture and external compensation allow the transient response to be optimized over a wide range of loads and output capacitors. Cycle-by-cycle current limit provides protection against shorted outputs and soft-start eliminates input current surge during start up. Fault conditions also include output under voltage protection and thermal shutdown. The low current (<3μA) shutdown mode provides output disconnect, enabling easy power management in battery powered systems. The RT8296A is available in a SOP-8 (Exposed Pad) package.

Ordering Information

RT8296A□□□

- Package Type
  SP : SOP-8 (Exposed Pad-Option 1)
- Lead Plating System
  G : Green (Halogen Free and Pb Free)
  Z : ECO (Ecological Element with Halogen Free and Pb free)
- H : UVP Hiccup
  L : UVP Latch-Off

Note :

Richtek products are :

- RoHS compliant and compatible with the current requirements of IPC/JEDEC J-STD-020.
- Suitable for use in SnPb or Pb-free soldering processes.

Features

- **±1.5% High Accuracy Feedback Voltage**
- **4.5V to 23V Input Voltage Range**
- **3A Output Current**
- **Integrated N-MOSFET Switches**
- **Current Mode Control**
- **Fixed Frequency Operation : 340kHz**
- **Output Adjustable from 0.8V to 20V**
- **Up to 95% Efficiency**
- **Programmable Soft-Start**
- **Stable with Low ESR Ceramic Output Capacitors**
- **Cycle-by-Cycle Over Current Protection**
- **Input Under Voltage Lockout**
- **Output Under Voltage Protection**
- **Thermal Shutdown Protection**
- **RoHS Compliant and Halogen Free**

Applications

- Industrial and Commercial Low Power Systems
- Set Top Box
- LCD Monitors and TVs
- Green Electronics/Appliances
- Point of Load Regulation of High Performance DSPs
- Wireless AP/Router

Pin Configurations

(TOP VIEW)

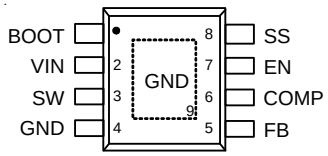

SOP-8 (Exposed Pad)

Marking Information

RT8296AxGSP

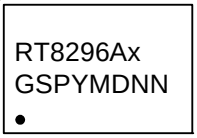

RT8296AxGSP : Product Number
x : H or L
YMDNN : Date Code

RT8296AxZSP

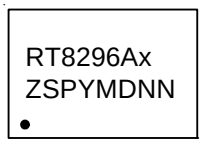

RT8296AxZSP : Product Number
x : H or L
YMDNN : Date Code

Copyright ©2015 Richtek Technology Corporation. All rights reserved. RICHTEK is a registered trademark of Richtek Technology Corporation.

Typical Application Circuit

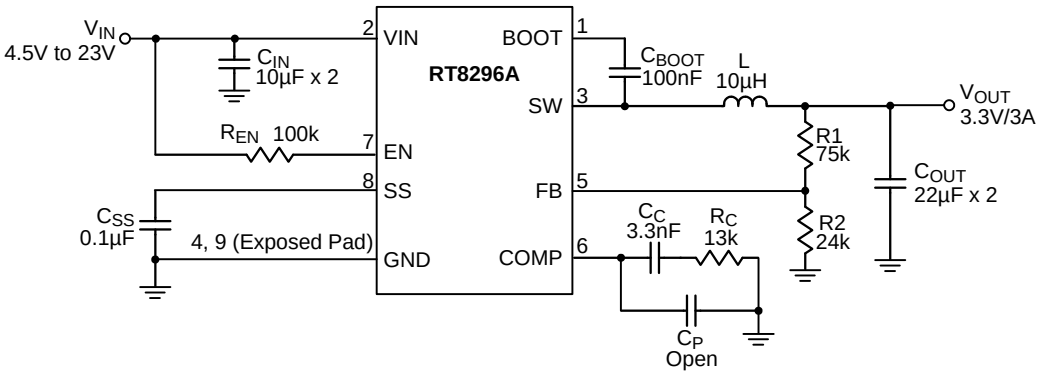

Table 1. Recommended Component Selection

V_{OUT} (V)	R1 (kΩ)	R2 (kΩ)	R_C (kΩ)	C_C (nF)	L (μH)	C_{OUT} (μF)
8	27	3	33	3.3	22	22 x 2
5	62	11.8	20	3.3	15	22 x 2
3.3	75	24	13	3.3	10	22 x 2
2.5	25.5	12	9.1	3.3	6.8	22 x 2
1.5	10.5	12	5.6	3.3	3.6	22 x 2
1.2	12	24	4.3	3.3	3.6	22 x 2
1	3	12	3.6	3.3	2	22 x 2

Functional Pin Description

Pin No.	Pin Name	Pin Function
1	BOOT	Bootstrap for High Side Gate Driver. Connect 0.1μF or greater ceramic capacitor from BOOT to SW pins.
2	VIN	Input Supply Voltage. Must bypass with a suitably large ceramic capacitor.
3	SW	Phase Node. Connect to external L-C filter.
4, 9 (Exposed Pad)	GND	Ground. The exposed pad must be soldered to a large PCB and connected to GND for maximum power dissipation.
5	FB	Feedback Input Pin. This pin is connected to the converter output. It is used to set the output of the converter to regulate to the desired value via an internal resistive divider. For an adjustable output, an external resistive divider is connected to this pin.
6	COMP	Compensation Node. COMP is used to compensate the regulation control loop. Connect a series RC network from COMP to GND. In some cases, an additional capacitor from COMP to GND is required.
7	EN	Enable Input Pin. A logic high enables the converter; a logic low forces the RT8296A into shutdown mode reducing the supply current to less than 3μA. Attach this pin to VIN with a 100kΩ pull up resistor for automatic startup.
8	SS	Soft-Start Control Input. SS controls the soft-start period. Connect a capacitor from SS to GND to set the soft-start period. A 0.1μF capacitor sets the soft-start period to 13.5ms.

Copyright ©2015 Richtek Technology Corporation. All rights reserved. RICHTEK is a registered trademark of Richtek Technology Corporation.

Function Block Diagram

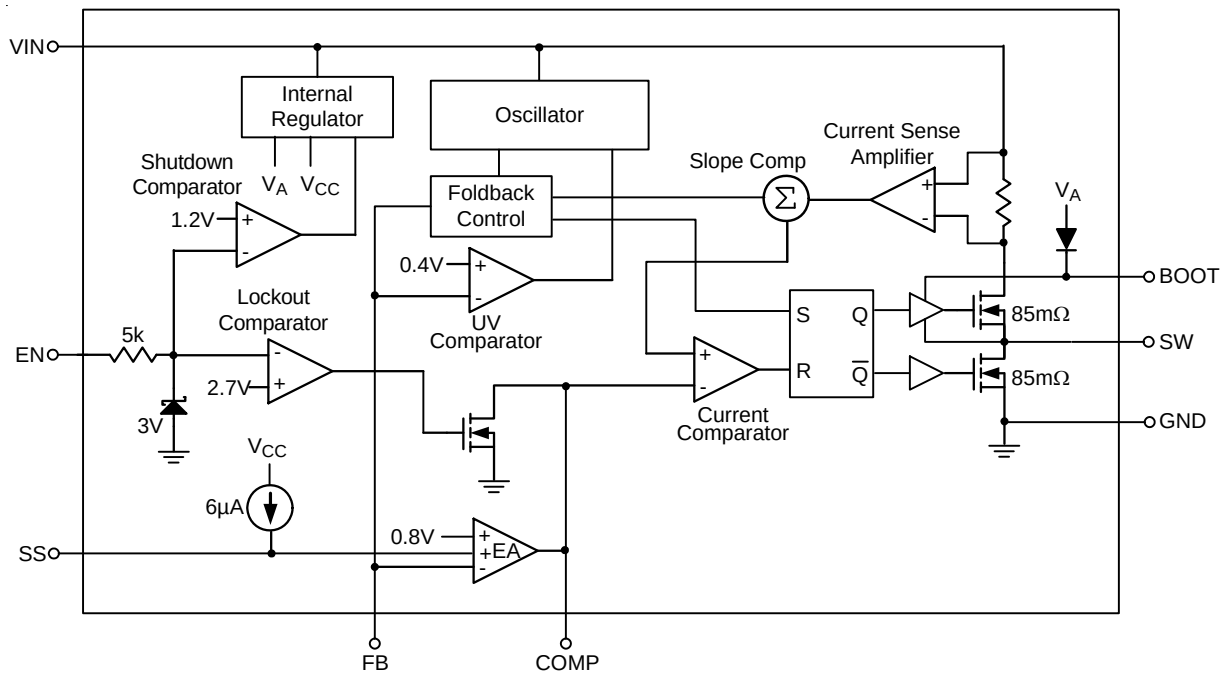

Copyright ©2015 Richtek Technology Corporation. All rights reserved. RICHTEK is a registered trademark of Richtek Technology Corporation.

Absolute Maximum Ratings (Note 1)

- Supply Input Voltage, V_{IN} ---------- –0.3V to 25V
- Switch Node Voltage, V_{SW} ---------- –0.3V to (V_{IN} + 0.3V)
- Switch Node Voltage, V_{SW}, < 10ns ---------- –5V to 25.3V
- BOOT Pin Voltage, V_{BOOT} ---------- –0.3V to 31.3V
- V_{BOOT} – V_{SW} ---------- –0.3V to 6V
- Other Pins Input Voltage ---------- –0.3V to 6V
- Power Dissipation, P_D @ T_A = 25°C
  SOP-8 (Exposed Pad) ---------- 1.333W
- Package Thermal Resistance (Note 2)
  SOP-8 (Exposed Pad), θ_{JA} ---------- 75°C/W
  SOP-8 (Exposed Pad), θ_{JC} ---------- 15°C/W
- Lead Temperature (Soldering, 10 sec.) ---------- 260°C
- Junction Temperature ---------- 150°C
- Storage Temperature Range ---------- –65°C to 150°C
- ESD Susceptibility (Note 3)
  HBM (Human Body Model) ---------- 2kV

Recommended Operating Conditions (Note 4)

- Supply Voltage, V_{IN} ---------- 4.5V to 23V
- Junction Temperature Range ---------- –40°C to 125°C
- Ambient Temperature Range ---------- –40°C to 85°C

Electrical Characteristics

(V_{IN} = 12V, T_A = 25°C, unless otherwise specified)

Parameter	Symbol	Test Conditions	Min	Typ	Max	Unit
Shutdown Supply Current		V_{EN} = 0V	--	0.5	3	μA
Supply Current		V_{EN} = 3 V, V_{FB} = 0.9V	--	0.8	1.2	mA
Feedback Reference Voltage	V_{FB}	4.5V ≤ V_{IN} ≤ 23V	0.788	0.8	0.812	V
Error Amplifier Transconductance	G_{EA}	ΔI_C = ±10μA	--	940	--	μA/V
High Side Switch On Resistance	$R_{DS(ON)1}$		--	85	--	mΩ
Low Side Switch On Resistance	$R_{DS(ON)2}$		--	85	--	mΩ
High Side Switch Leakage Current		V_{EN} = 0V, V_{SW} = 0V	--	0	10	μA
Upper Switch Current Limit		Min. Duty Cycle, V_{BOOT} – V_{SW} = 4.8V	3.8	5.1	6.4	A
COMP to Current Sense Transconductance	G_{CS}		--	5.4	--	A/V
Oscillation Frequency	f_{OSC1}		300	340	380	kHz

Copyright ©2015 Richtek Technology Corporation. All rights reserved. RICHTEK is a registered trademark of Richtek Technology Corporation.

Parameter		Symbol	Test Conditions	Min	Typ	Max	Unit
Short Circuit Oscillation Frequency		f_{OSC2}	V_{FB} = 0V	--	100	--	kHz
Maximum Duty Cycle		D_{MAX}	V_{FB} = 0.7V	--	93	--	%
Minimum On Time		t_{ON}		--	100	--	ns
Input Under Voltage Lockout Threshold			V_{IN} Rising	3.8	4.2	4.5	V
Input Under Voltage Lockout Threshold Hysteresis				--	320	--	mV
EN Input Voltage	Logic-High	V_{IH}		2.7	--	5.5	V
	Logic-Low	V_{IL}		--	--	0.4	
Soft-Start Current		I_{SS}	V_{SS} = 0V	--	6	--	μA
Soft-Start Period		t_{SS}	C_{SS} = 0.1μF	--	13.5	--	ms
Thermal Shutdown		T_{SD}		--	150	--	°C

Note 1. Stresses beyond those listed "Absolute Maximum Ratings" may cause permanent damage to the device. These are stress ratings only, and functional operation of the device at these or any other conditions beyond those indicated in the operational sections of the specifications is not implied. Exposure to absolute maximum rating conditions may affect device reliability.

Note 2. θ_{JA} is measured at T_A = 25°C on a high effective thermal conductivity four-layer test board per JEDEC 51-7. θ_{JC} is measured at the exposed pad of the package.

Note 3. Devices are ESD sensitive. Handling precaution is recommended.

Note 4. The device is not guaranteed to function outside its operating conditions.

Copyright ©2015 Richtek Technology Corporation. All rights reserved. RICHTEK is a registered trademark of Richtek Technology Corporation.

Typical Operating Characteristics

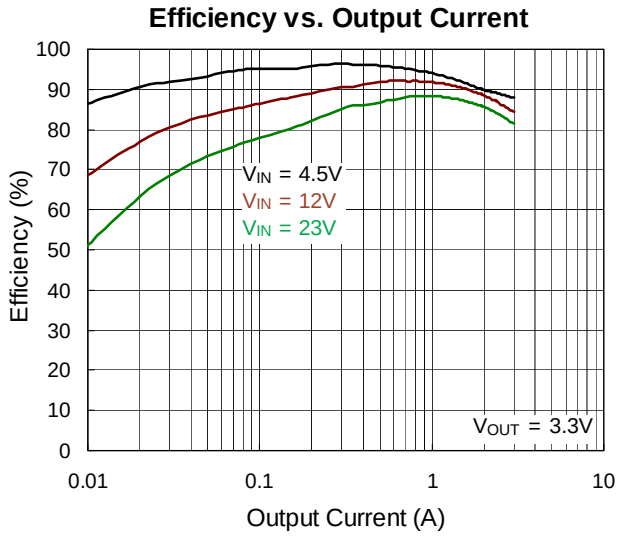

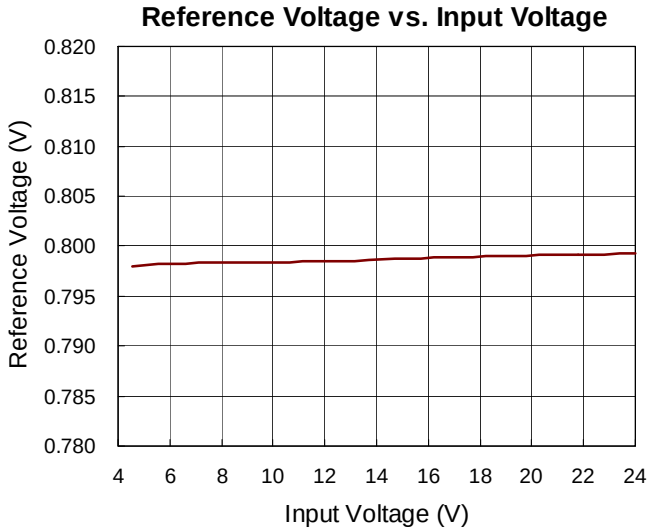

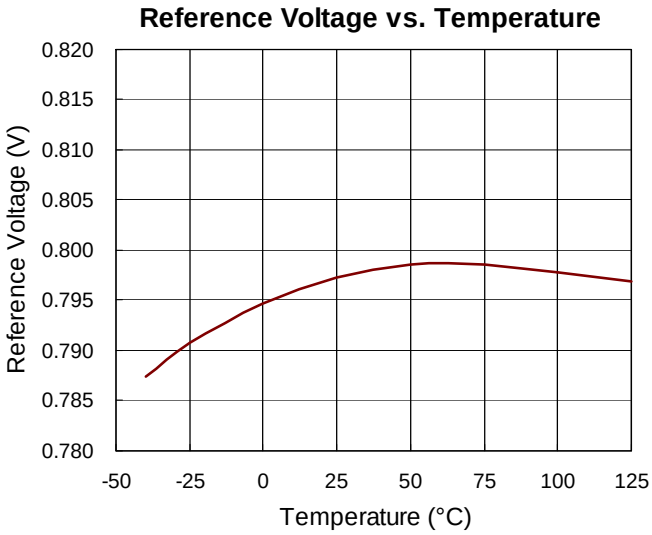

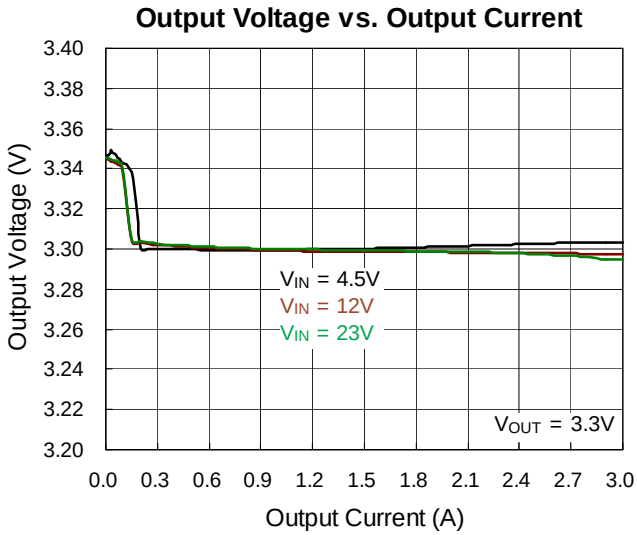

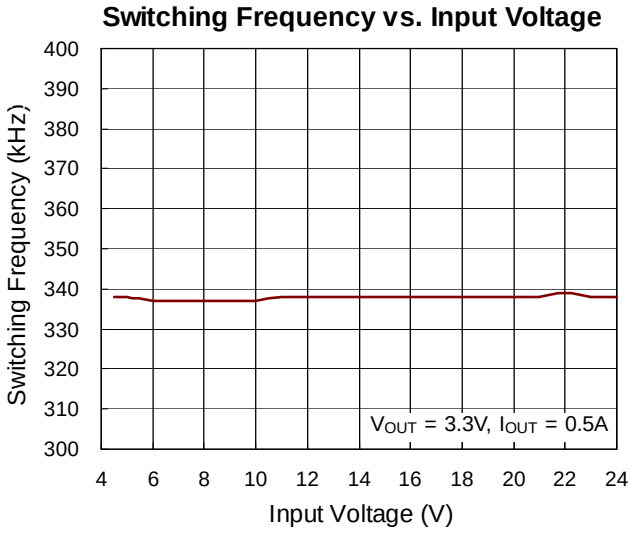

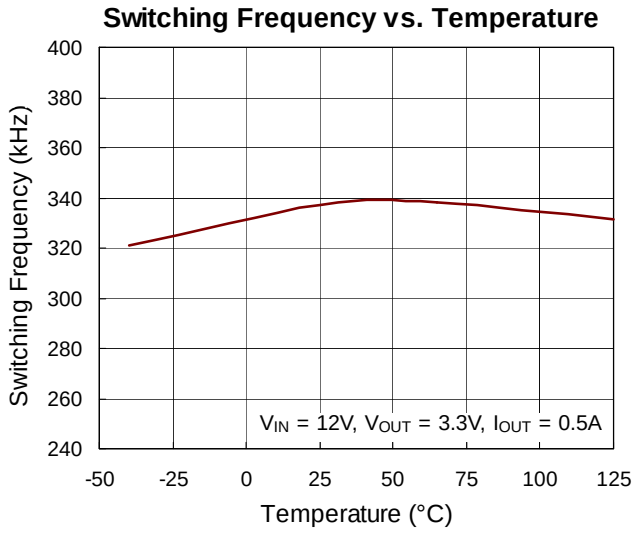

Copyright ©2015 Richtek Technology Corporation. All rights reserved. RICHTEK is a registered trademark of Richtek Technology Corporation.

Output Current Limit vs. Input Voltage

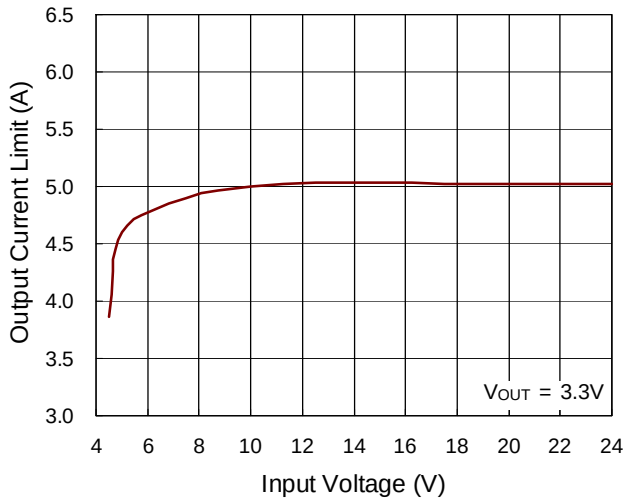

Current Limit vs. Temperature

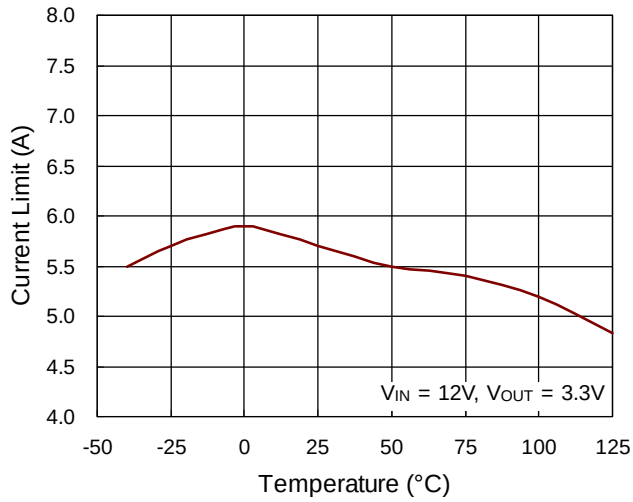

Load Transient Response

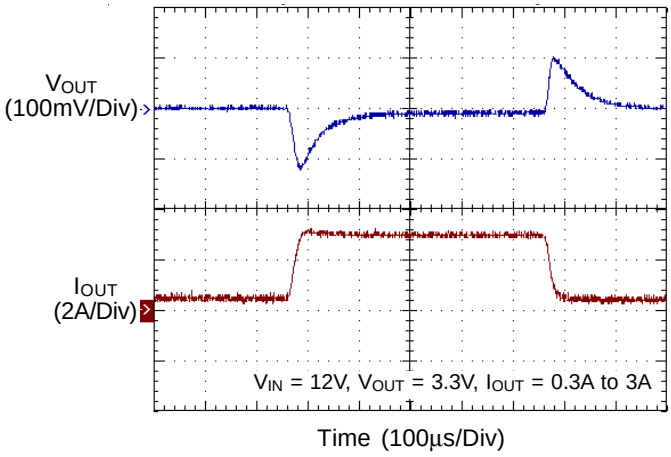

Load Transient Response

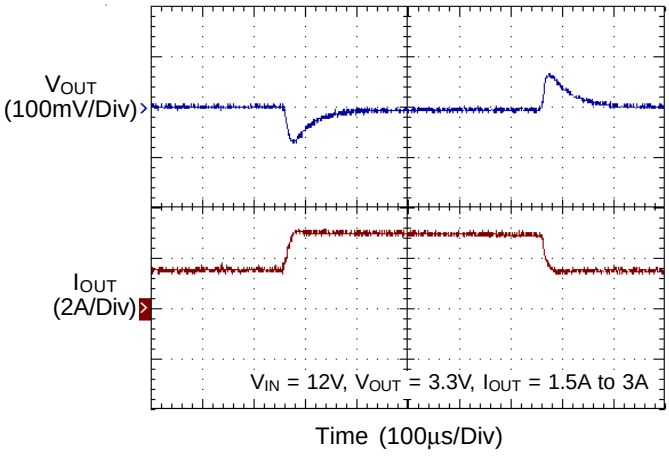

Output Voltage Ripple

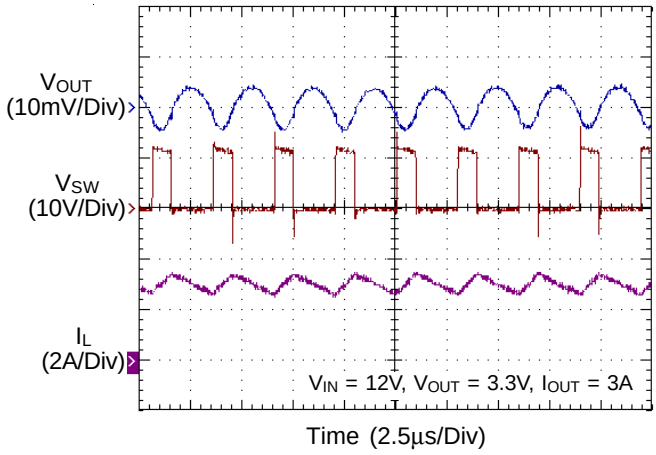

Output Voltage Ripple

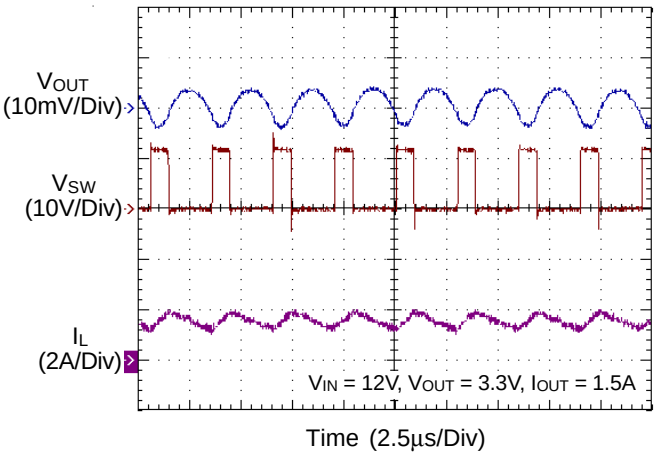

Copyright ©2015 Richtek Technology Corporation. All rights reserved. RICHTEK is a registered trademark of Richtek Technology Corporation.

Power On from V_{IN}

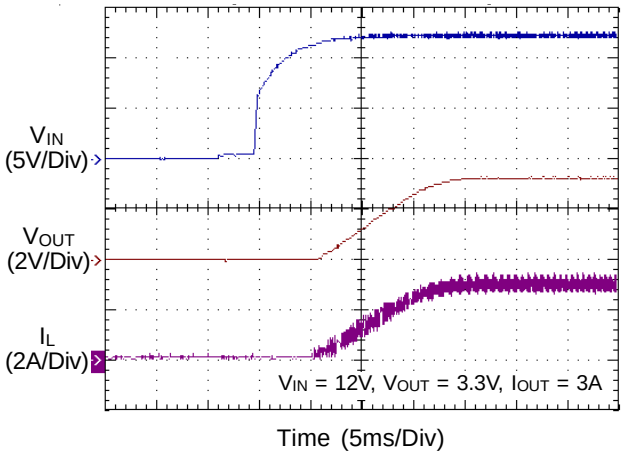

Power Off from V_{IN}

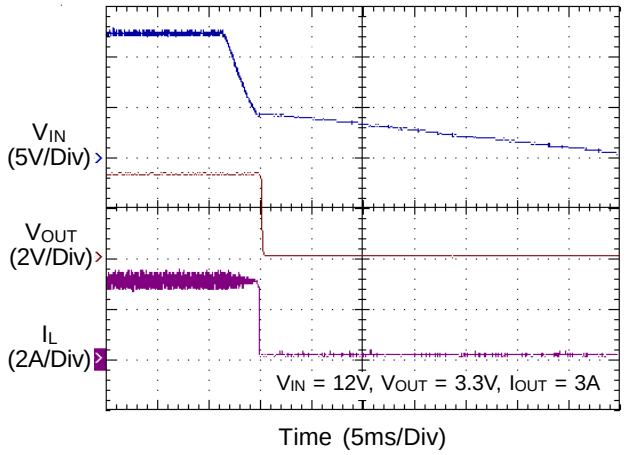

Power On from EN

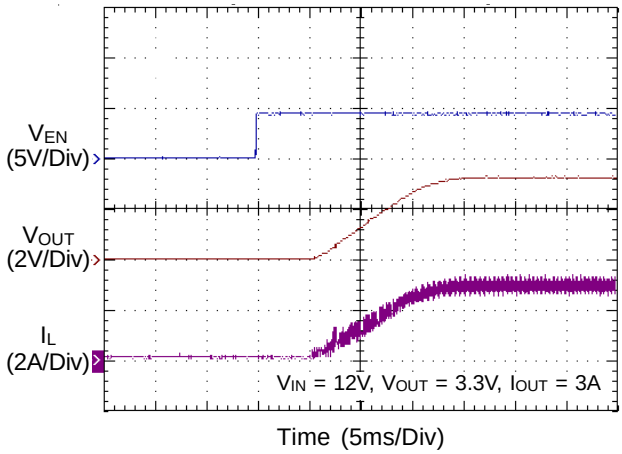

Power Off from EN

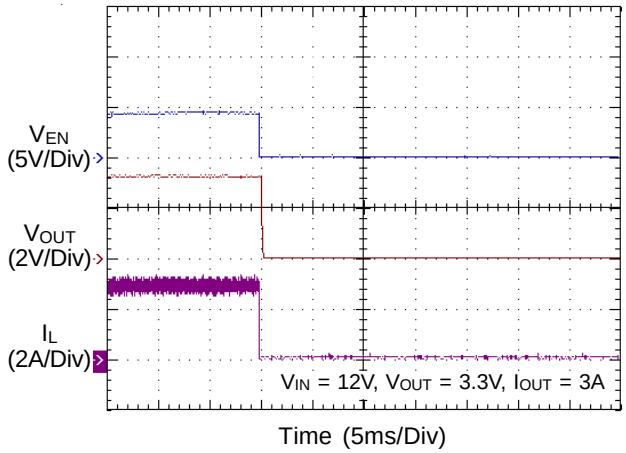

Copyright ©2015 Richtek Technology Corporation. All rights reserved. RICHTEK is a registered trademark of Richtek Technology Corporation.

Application Information

The RT8296A is a synchronous high voltage buck converter that can support the input voltage range from 4.5V to 23V and the output current can be up to 3A.

Output Voltage Setting

The resistive divider allows the FB pin to sense the output voltage as shown in Figure 1.

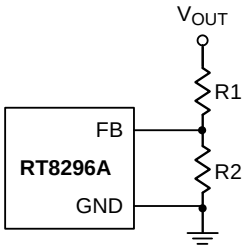

Figure 1. Output Voltage Setting

The output voltage is set by an external resistive voltage divider according to the following equation :

$$V_{OUT} = V_{FB}\left(1+\frac{R1}{R2}\right)$$

Where V_{FB} is the feedback reference voltage (0.8V typ.).

External Bootstrap Diode

Connect a 100nF low ESR ceramic capacitor between the BOOT pin and SW pin. This capacitor provides the gate driver voltage for the high side MOSFET.

It is recommended to add an external bootstrap diode between an external 5V and BOOT pin for efficiency improvement when input voltage is lower than 5.5V or duty ratio is higher than 65% .The bootstrap diode can be a low cost one such as IN4148 or BAT54. The external 5V can be a 5V fixed input from system or a 5V output of the RT8296A. Note that the external boot voltage must be lower than 5.5V

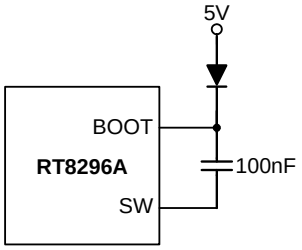

Figure 2. External Bootstrap Diode

Soft-Start

The RT8296A contains an external soft-start clamp that gradually raises the output voltage. The soft-start timming can be programed by the external capacitor between SS pin and GND. The chip provides a 6μA charge current for the external capacitor. If 0.1μF capacitor is used to set the soft-start, it's period will be 13.5ms(typ.).

Chip Enable Operation

The EN pin is the chip enable input. Pulling the EN pin low (<0.4V) will shutdown the device. During shutdown mode, the RT8296A quiescent current drops to lower than 3μA. Driving the EN pin high (>2.7V, < 5.5V) will turn on the device again. For external timing control (e.g.RC), the EN pin can also be externally pulled high by adding a R_{EN}* resistor and C_{EN}* capacitor from the VIN pin (see Figure 5).

An external MOSFET can be added to implement digital control on the EN pin when no system voltage above 2.5V is available, as shown in Figure 3. In this case, a 100kΩ pull-up resistor, R_{EN}, is connected between V_{IN} and the EN pin. MOSFET Q1 will be under logic control to pull down the EN pin.

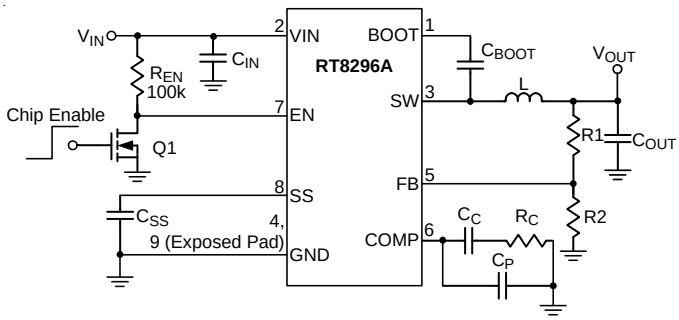

Figure 3. Enable Control Circuit for Logic Control with Low Voltage

To prevent enabling circuit when V_{IN} is smaller than the V_{OUT} target value, a resistive voltage divider can be placed between the input voltage and ground and connected to the EN pin to adjust IC lockout threshold, as shown in Figure 4. For example, if an 8V output voltage is regulated from a 12V input voltage, the resistor R_{EN2} can be selected to set input lockout threshold larger than 8V.

Copyright ©2015 Richtek Technology Corporation. All rights reserved. RICHTEK is a registered trademark of Richtek Technology Corporation.

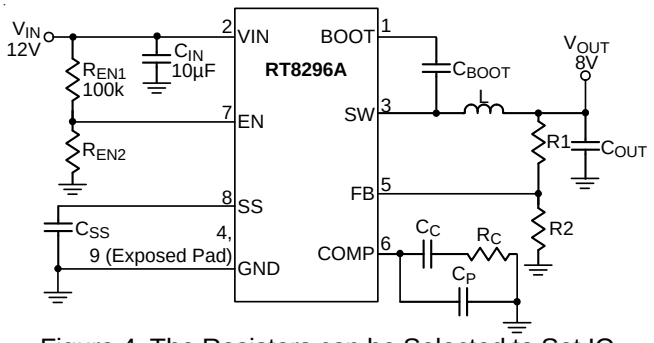

Figure 4. The Resistors can be Selected to Set IC Lockout Threshold

Under Voltage Protection

Hiccup Mode

For the RT8296AH, it provides Hiccup Mode Under Voltage Protection (UVP). When the FB voltage drops below half of the feedback reference voltage, V_{FB}, the UVP function will be triggered and the RT8296AH will shut down for a period of time and then recover automatically. The Hiccup Mode UVP can reduce input current in short-circuit conditions.

Latch-Off Mode

For the RT8296AL, it provides Latch-Off Mode Under Voltage Protection (UVP). When the FB voltage drops below half of the feedback reference voltage, V_{FB}, UVP will be triggered and the RT8296AL will shutdown in Latch-Off Mode. In shutdown condition, the RT8296AL can be reset by EN pin or power input VIN.

Inductor Selection

The inductor value and operating frequency determine the ripple current according to a specific input and output voltage. The ripple current ΔI_L increases with higher V_{IN} and decreases with higher inductance.

$$\Delta I_L = \left[\frac{V_{OUT}}{f \times L}\right] \times \left[1 - \frac{V_{OUT}}{V_{IN}}\right]$$

Having a lower ripple current reduces not only the ESR losses in the output capacitors but also the output voltage ripple. High frequency with small ripple current can achieve highest efficiency operation. However, it requires a large inductor to achieve this goal.

For the ripple current selection, the value of $\Delta I_L = 0.24(I_{MAX})$ will be a reasonable starting point. The largest ripple current occurs at the highest V_{IN}. To guarantee that the ripple current stays below the specified maximum, the inductor value should be chosen according to the following equation :

$$L = \left[\frac{V_{OUT}}{f \times \Delta I_{L(MAX)}}\right] \times \left[1 - \frac{V_{OUT}}{V_{IN(MAX)}}\right]$$

The inductor's current rating (caused a 40°C temperature rising from 25°C ambient) should be greater than the maximum load current and its saturation current should be greater than the short circuit peak current limit. Please see Table 2 for the inductor selection reference.

Table 2. Suggested Inductors for Typical Application Circuit

Component Supplier	Series	Dimensions (mm)
TDK	VLF10045	10 x 9.7 x 4.5
TDK	SLF12565	12.5 x 12.5 x 6.5
TAIYO YUDEN	NR8040	8 x 8 x 4

C_{IN} and C_{OUT} Selection

The input capacitance, C_{IN}, is needed to filter the trapezoidal current at the source of the high side MOSFET. To prevent large ripple current, a low ESR input capacitor sized for the maximum RMS current should be used. The RMS current is given by :

$$I_{RMS} = I_{OUT(MAX)} \frac{V_{OUT}}{V_{IN}} \sqrt{\frac{V_{IN}}{V_{OUT}} - 1}$$

This formula has a maximum at $V_{IN} = 2V_{OUT}$, where $I_{RMS} = I_{OUT} / 2$. This simple worst case condition is commonly used for design because even significant deviations do not offer much relief.

Choose a capacitor rated at a higher temperature than required. Several capacitors may also be paralleled to meet size or height requirements in the design.

For the input capacitor, two 10µF low ESR ceramic capacitors are recommended. For the recommended capacitor, please refer to table 3 for more detail.

The selection of C_{OUT} is determined by the required ESR to minimize voltage ripple.

Moreover, the amount of bulk capacitance is also a key for C_{OUT} selection to ensure that the control loop is stable. Loop stability can be checked by viewing the load transient response as described in a later section.

Copyright ©2015 Richtek Technology Corporation. All rights reserved. RICHTEK is a registered trademark of Richtek Technology Corporation.

The output ripple, ΔV_{OUT}, is determined by :

$$\Delta V_{OUT} \le \Delta I_L \left[ESR + \frac{1}{8fC_{OUT}} \right]$$

The output ripple will be highest at the maximum input voltage since ΔI_L increases with input voltage. Multiple capacitors placed in parallel may be needed to meet the ESR and RMS current handling requirement. Dry tantalum, special polymer, aluminum electrolytic and ceramic capacitors are all available in surface mount packages. Special polymer capacitors offer very low ESR value. However, it provides lower capacitance density than other types. Although Tantalum capacitors have the highest capacitance density, it is important to only use types that pass the surge test for use in switching power supplies. Aluminum electrolytic capacitors have significantly higher ESR. However, it can be used in cost-sensitive applications for ripple current rating and long term reliability considerations. Ceramic capacitors have excellent low ESR characteristics but can have a high voltage coefficient and audible piezoelectric effects. The high Q of ceramic capacitors with trace inductance can also lead to significant ringing.

Higher values, lower cost ceramic capacitors are now becoming available in smaller case sizes. Their high ripple current, high voltage rating and low ESR make them ideal for switching regulator applications. However, care must be taken when these capacitors are used at input and output. When a ceramic capacitor is used at the input and the power is supplied by a wall adapter through long wires, a load step at the output can induce ringing at the input, V_{IN}. At best, this ringing can couple to the output and be mistaken as loop instability. At worst, a sudden inrush of current through the long wires can potentially cause a voltage spike at V_{IN} large enough to damage the part.

Checking Transient Response

The regulator loop response can be checked by looking at the load transient response. Switching regulators take several cycles to respond to a step in load current. When a load step occurs, V_{OUT} immediately shifts by an amount equal to ΔI_{LOAD} (ESR) also begins to charge or discharge C_{OUT} generating a feedback error signal for the regulator to return V_{OUT} to its steady-state value. During this recovery time, V_{OUT} can be monitored for overshoot or ringing that would indicate a stability problem.

EMI Consideration

Since parasitic inductance and capacitance effects in PCB circuitry would cause a spike voltage on SW pin when high side MOSFET is turned-on/off, this spike voltage on SW may impact on EMI performance in the system. In order to enhance EMI performance, there are two methods to suppress the spike voltage. One is to place an R-C snubber between SW and GND and make them as close as possible to the SW pin (see Figure 5). Another method is adding a resistor in series with the bootstrap capacitor, C_{BOOT}. But this method will decrease the driving capability to the high side MOSFET. It is strongly recommended to reserve the R-C snubber during PCB layout for EMI improvement. Moreover, reducing the SW trace area and keeping the main power in a small loop will be helpful on EMI performance. For detailed PCB layout guide, please refer to the section of Layout Consideration.

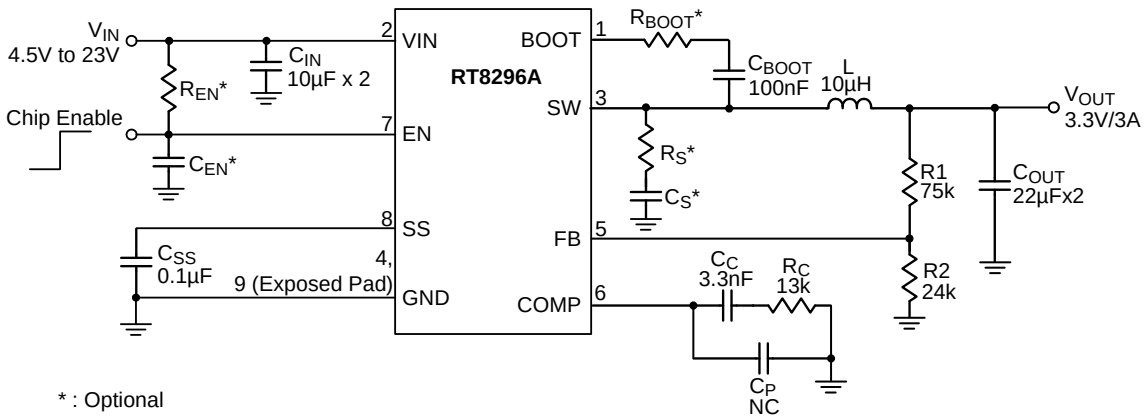

Figure 5. Reference Circuit with Snubber and Enable Timing Control

Copyright ©2015 Richtek Technology Corporation. All rights reserved. RICHTEK is a registered trademark of Richtek Technology Corporation.

Thermal Considerations

For continuous operation, do not exceed the maximum operation junction temperature 125°C. The maximum power dissipation depends on the thermal resistance of IC package, PCB layout, the rate of surroundings airflow and temperature difference between junction to ambient. The maximum power dissipation can be calculated by following formula :

$P_{D(MAX)} = (T_{J(MAX)} - T_A) / \theta_{JA}$

Where $T_{J(MAX)}$ is the maximum operation junction temperature , T_A is the ambient temperature and the θ_{JA} is the junction to ambient thermal resistance.

For recommended operating conditions specification of RT8296A, the maximum junction temperature is 125°C. The junction to ambient thermal resistance θ_{JA} is layout dependent. For PSOP-8 package, the thermal resistance θ_{JA} is 75°C/W on the standard JEDEC 51-7 four-layers thermal test board. The maximum power dissipation at T_A = 25°C can be calculated by following formula :

$P_{D(MAX)}$ = (125°C − 25°C) / (75°C/W) = 1.333W (min.copper area PCB layout)

$P_{D(MAX)}$ = (125°C − 25°C) / (49°C/W) = 2.04W (70mm^{2}copper area PCB layout)

The thermal resistance θ_{JA} of SOP-8 (Exposed Pad) is determined by the package architecture design and the PCB layout design. However, the package architecture design had been designed. If possible, it's useful to increase thermal performance by the PCB layout copper design. The thermal resistance θ_{JA} can be decreased by adding copper area under the exposed pad of SOP-8 (Exposed Pad) package.

As shown in Figure 6, the amount of copper area to which the SOP-8 (Exposed Pad) is mounted affects thermal performance. When mounted to the standard SOP-8 (Exposed Pad) pad (Figure 6.a), θ_{JA} is 75°C/W. Adding copper area of pad under the SOP-8 (Exposed Pad) (Figure 6.b) reduces the θ_{JA} to 64°C/W. Even further, increasing the copper area of pad to 70mm^2 (Figure 6.e) reduces the θ_{JA} to 49°C/W.

The maximum power dissipation depends on operating ambient temperature for fixed $T_{J(MAX)}$ and thermal resistance θ_{JA}. For RT8296A packages, the Figure 7 of derating curves allows the designer to see the effect of rising ambient temperature on the maximum power dissipation allowed.

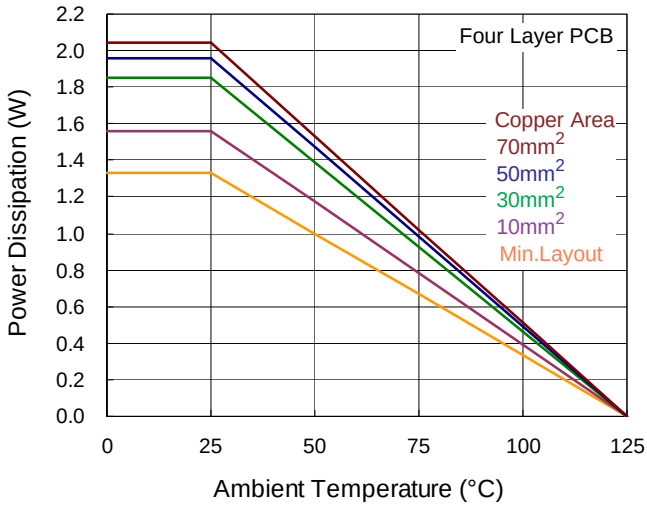

Figure 7. Derating Curves for RT8296A Package

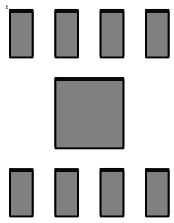

(a) Copper Area = (2.3 x 2.3) mm^2, θ_{JA} = 75°C/W

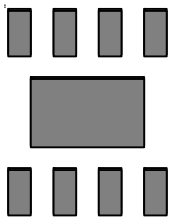

(b) Copper Area = 10mm^2, θ_{JA} = 64°C/W

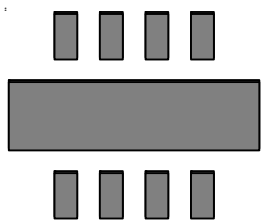

(c) Copper Area = 30mm^2 , θ_{JA} = 54°C/W

Copyright ©2015 Richtek Technology Corporation. All rights reserved. RICHTEK is a registered trademark of Richtek Technology Corporation.

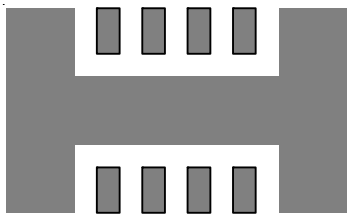

(d) Copper Area = 50mm^2, θ_{JA} = 51°C/W

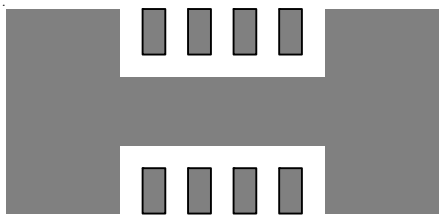

(e) Copper Area = 70mm^2, θ_{JA} = 49°C/W

Figure 6. Themal Resistance vs. Copper Area Layout Design

Layout Consideration

Follow the PCB layout guidelines for optimal performance of the RT8296A.

- Keep the traces of the main current paths as short and wide as possible.
- Put the input capacitor as close as possible to the device pins (VIN and GND).
- LX node is with high frequency voltage swing and should be kept at small area. Keep analog components away from the LX node to prevent stray capacitive noise pick-up.
- Connect feedback network behind the output capacitors. Keep the loop area small. Place the feedback components near the RT8296A.
- Connect all analog grounds to a command node and then connect the command node to the power ground behind the output capacitors.
- An example of PCB layout guide is shown in Figure 6 for reference.

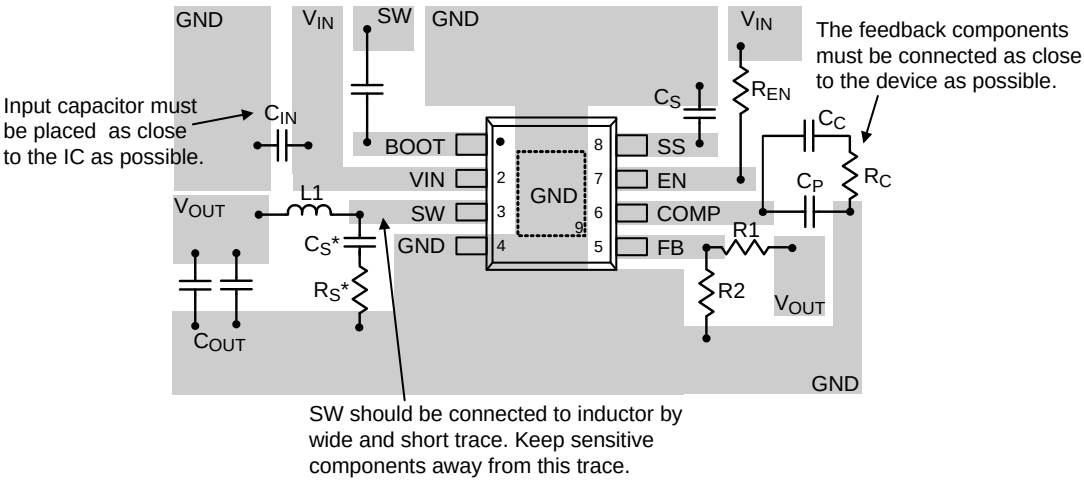

Figure 8. PCB Layout Guide

Copyright ©2015 Richtek Technology Corporation. All rights reserved. RICHTEK is a registered trademark of Richtek Technology Corporation.

Outline Dimension

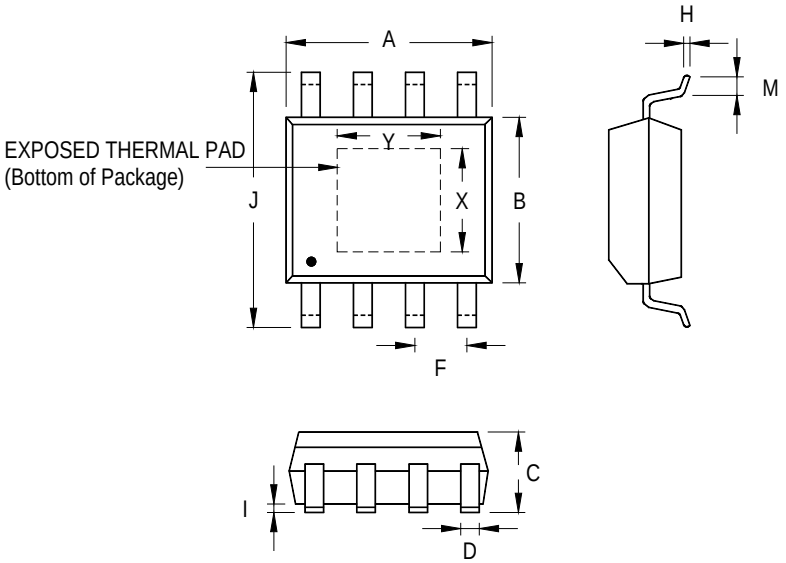

Symbol		Dimensions In Millimeters		Dimensions In Inches	
		Min	Max	Min	Max
A		4.801	5.004	0.189	0.197
B		3.810	4.000	0.150	0.157
C		1.346	1.753	0.053	0.069
D		0.330	0.510	0.013	0.020
F		1.194	1.346	0.047	0.053
H		0.170	0.254	0.007	0.010
I		0.000	0.152	0.000	0.006
J		5.791	6.200	0.228	0.244
M		0.406	1.270	0.016	0.050
Option 1	X	2.000	2.300	0.079	0.091
	Y	2.000	2.300	0.079	0.091
Option 2	X	2.100	2.500	0.083	0.098
	Y	3.000	3.500	0.118	0.138

8-Lead SOP (Exposed Pad) Plastic Package

Richtek Technology Corporation

14F, No. 8, Tai Yuen 1st Street, Chupei City

Hsinchu, Taiwan, R.O.C.

Tel: (8863)5526789

Richtek products are sold by description only. Richtek reserves the right to change the circuitry and/or specifications without notice at any time. Customers should obtain the latest relevant information and data sheets before placing orders and should verify that such information is current and complete. Richtek cannot assume responsibility for use of any circuitry other than circuitry entirely embodied in a Richtek product. Information furnished by Richtek is believed to be accurate and reliable. However, no responsibility is assumed by Richtek or its subsidiaries for its use; nor for any infringements of patents or other rights of third parties which may result from its use. No license is granted by implication or otherwise under any patent or patent rights of Richtek or its subsidiaries.

Looking for pricing, stock, or lifecycle information?

Click below to explore more details on WIN SOURCE:

- View EVB_RT8296AHZSP on WIN SOURCE
- Richtek USA Inc. Information

Optimize Your Supply Chain with WIN SOURCE Solutions

- Global Sourcing Solution
- Obsolete Management
- Cost Control Management
- Shortage Management
- Alternative Solution
- Excess Inventory Management