THE DATASHEET OF

031-70507

www.win-source.net 0086-755-83957316

NOTES:
1. MATERIALS AND FINISHES:
   BODY - ZINC DIE CAST, NICKEL PLATING
   CONTACT - PHOSPHOR BRONZE, GOLD PLATING (.000003 THICK)
   @ CONTACT AREA ONLY, TIN PLATING AT TAIL, NICKEL PLATED OVERALL
   INSULATOR - POLYPROPYLENE
   ROUND PIN - BRASS, TIN PLATING
   GROUNDNG TERMINAL - STEEL, TIN PLATING
2. ELECTRICAL:
   A. IMPEDANCE: 75 OHM
   B. FREQUENCY RANGE: DC - 1 GHz
   C. DIELECTRIC WITHSTANDING VOLTAGE: 1500 VRMS, MIN.
3. MECHANICAL:
   A. DURABILITY: 500 CYCLES MIN.
   B. TEMPERATURE RANGE: -55° C TO 85° C
4. PACKAGING:
   A. PACKAGED IN PACKING TRAYS
   B. QUANTITY PER TRAY: 40

THIRD ANGLE PROJ.

REVISIONS				
REV	DESCRIPTION	DATE	ECO	APPR
A	RELEASE TO MFG.	4/18/13	45442	EW

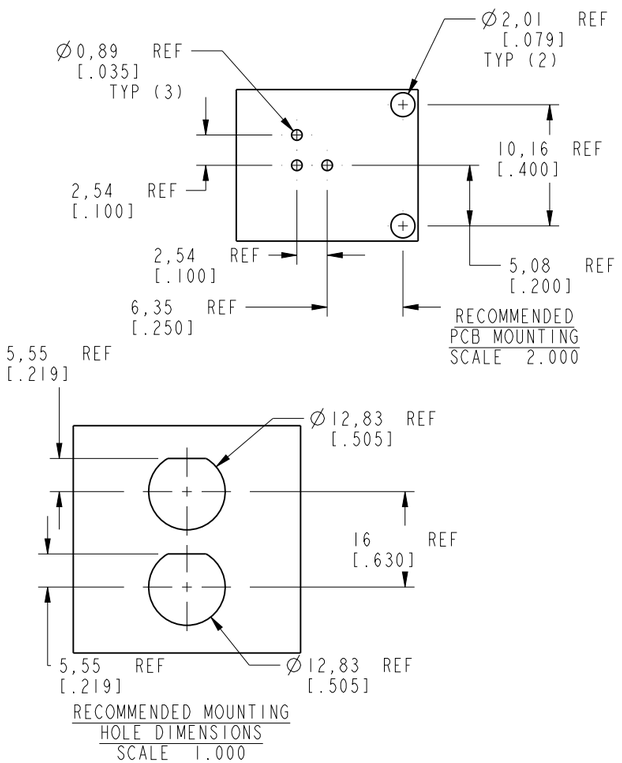

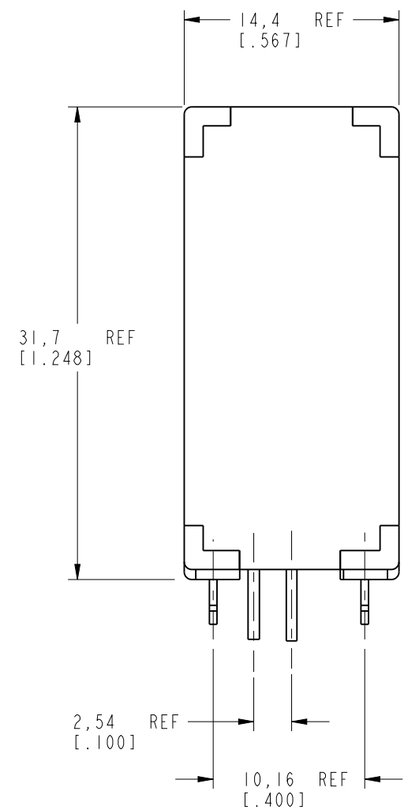

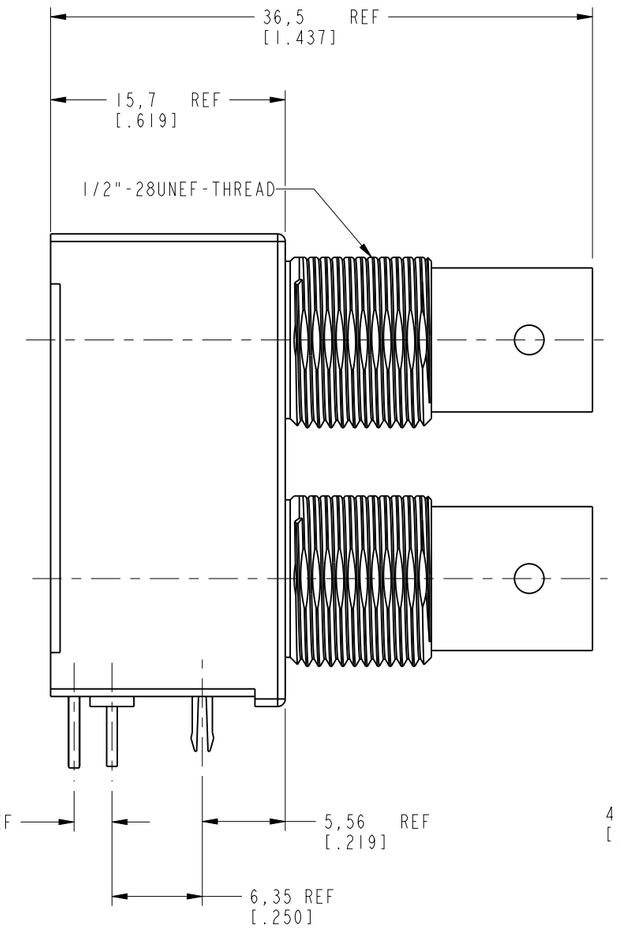

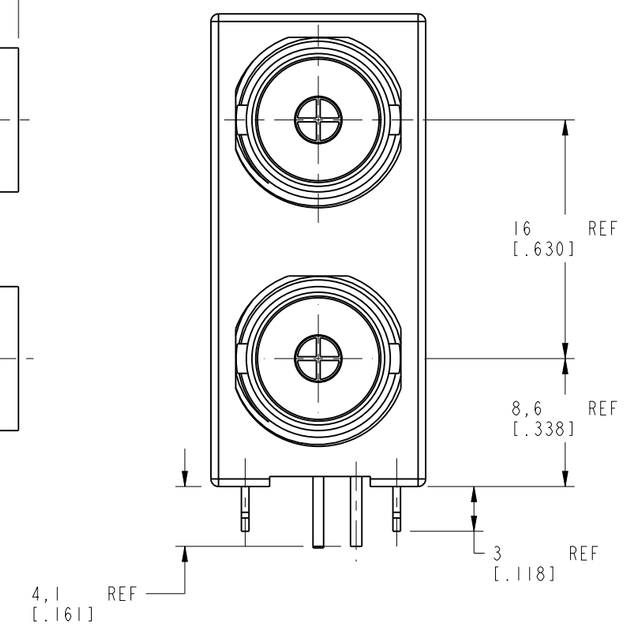

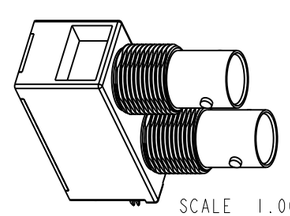

CUSTOMER OUTLINE DRAWING

ALL OTHER SHEETS ARE FOR INTERNAL USE ONLY

UNLESS OTHERWISE SPECIFIED, DIMENSIONS ARE IN METRIC AND TOLERANCES ARE:				
<0.5mm	0.5 - 6mm	6 - 30mm	30 - 120mm	ANGLES
± 0.05mm	±0.1mm	±0.2mm	± 0.3mm	±1°

NOTICE - These drawings, specifications, or other data (1) are, and remain the property of Amphenol corp. (2) must be returned upon requiest; and (3) arre confidential and not to be disclosed to any person other than those to whom they are given by Amphenol Corp. the funishing of these drawings, specifications, or other data by Amphenol Corp., or to any other person to anyone for any purpose is not to be regarded by implicatioin or otherwise in any manner licensing, granting rights to permitting such holder or any other sperson to manufacture, use or sell any product, process or design, patented or otherwsie, that may in any way be related to or disclosed by said drawings, specifications, or other data.

MATERIAL
-
-

REFERENCE
EAR # 248

CONFIGURATION LEVEL: In Work

FINISH

DRAWN ERIC WANKOFF	DATE 01-Aug-12	
ENGINEER ERIC WANKOFF	DATE 01-Aug-12	
APPROVED K. CAPOZZI	DATE 3/26/13	
CAD FILE		

TITLE
75 OHM BNC
DUAL PORT R/A JACK

SCALE: 2.5:1.0 | SHEET 2 OF 2

DWG SIZE B | REV A

Amphenol RF
www.amphenolrf.com

DRAWING NO. 31-70507
ITEM NO. 31-70507
PART NO. 31-70507

Looking for pricing, stock, or lifecycle information?

Click below to explore more details on WIN SOURCE:

- View 031-70507 on WIN SOURCE
- Amphenol-RF Division Information

Optimize Your Supply Chain with WIN SOURCE Solutions

- Global Sourcing Solution
- Obsolete Management
- Cost Control Management
- Shortage Management
- Alternative Solution
- Excess Inventory Management