THE DATASHEET OF

LTC489CN#PBF

www.win-source.net 0086-755-83957316

Quad RS485 Line Receiver

FEATURES

- Low Power: I_{CC} = 7mA Typ
- Designed for RS485 or RS422 Applications
- Single 5V Supply
- –7V to 12V Bus Common Mode Range Permits ±7V Ground Difference Between Devices on the Bus
- 60mV Typical Input Hysteresis
- Receiver Maintains High Impedance in Three-State or with the Power Off
- 28ns Typical Receiver Propagation Delay
- Pin Compatible with the SN75173 (LTC488)
- Pin Compatible with the SN75175 (LTC489)

APPLICATIONS

- Low Power RS485/RS422 Receivers
- Level Translator

DESCRIPTION

The LTC®488 and LTC489 are low power differential bus/line receivers designed for multipoint data transmission standard RS485 applications with extended common mode range (12V to –7V). They also meet the requirements of RS422.

The CMOS design offers significant power savings over its bipolar counterpart without sacrificing ruggedness against overload or ESD damage.

The receiver features three-state outputs, with the receiver output maintaining high impedance over the entire common mode range.

The receiver has a fail-safe feature which guarantees a high output state when the inputs are left open.

Both AC and DC specifications are guaranteed 4.75V to 5.25V supply voltage range.

, LT, LTC and LTM are registered trademarks of Linear Technology Corporation. All other trademarks are the property of their respective owners.

TYPICAL APPLICATION

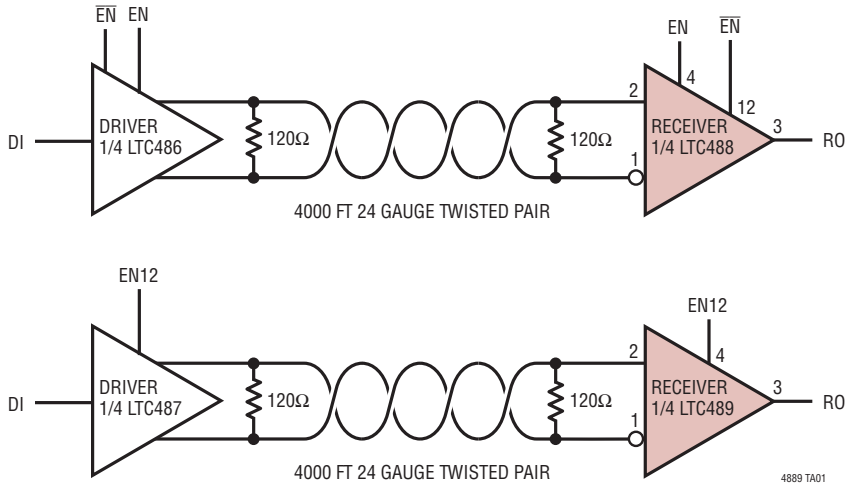

ABSOLUTE MAXIMUM RATINGS

(Note 1)

Supply Voltage (V_{CC}) 12V
Control Input Currents .....–25mA to 25mA
Control Input Voltages .....–0.5V to (V_{CC} + 0.5V)
Receiver Input Voltages .....±14V
Receiver Output Voltages.....–0.5V to (V_{CC} + 0.5V)

Operating Temperature Range
LTC488C/LTC489C ..... 0°C to 70°C
LTC488I/LTC489I.....–40°C to 85°C
Storage Temperature Range.....–65°C to 150°C
Lead Temperature (Soldering, 10 sec) ..... 300°C

PIN CONFIGURATION

LTC488

TOP VIEW

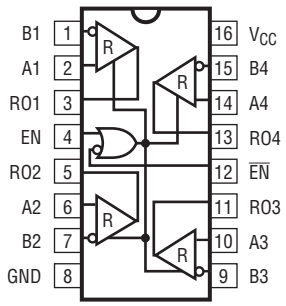

N PACKAGE
16-LEAD PLASTIC DIP
T_{JMAX} = 150°C, θ_{JA} = 70°C/W

LTC488

TOP VIEW

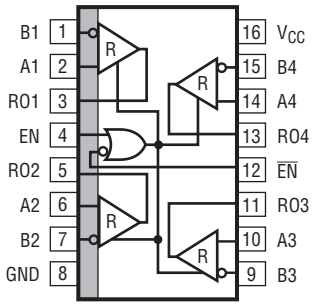

SW PACKAGE
16-LEAD PLASTIC (WIDE) SO
T_{JMAX} = 150°C, θ_{JA} = 90°C/W

LTC489

TOP VIEW

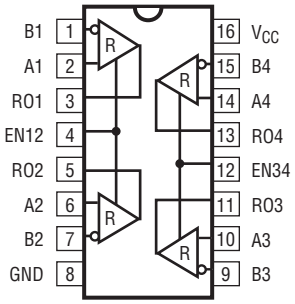

N PACKAGE
16-LEAD PLASTIC DIP
T_{JMAX} = 150°C, θ_{JA} = 90°C/W

LTC489

TOP VIEW

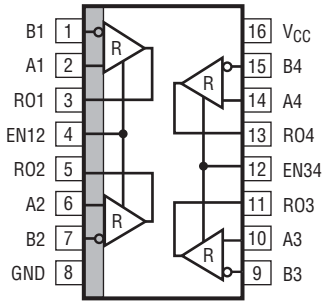

SW PACKAGE
16-LEAD PLASTIC (WIDE) SO
T_{JMAX} = 150°C, θ_{JA} = 90°C/W

ORDER INFORMATION

LEAD FREE FINISH	TAPE AND REEL	PART MARKING	PACKAGE DESCRIPTION	TEMPERATURE RANGE
LTC488CN#PBF	LTC488CN#TRPBF	LTC488CN	16-Lead Plastic DIP	0°C to 70°C
LTC488CSW#PBF	LTC488CSW#TRPBF	LTC488CSW	16-Lead Plastic SO	0°C to 70°C
LTC488IN#PBF	LTC488IN#TRPBF	LTC488IN	16-Lead Plastic DIP	–40°C to 85°C
LTC488ISW#PBF	LTC488ISW#TRPBF	LTC488ISW	16-Lead Plastic SO	–40°C to 85°C
LTC489CN#PBF	LTC489CN#TRPBF	LTC489CN	16-Lead Plastic DIP	0°C to 70°C
LTC489CSW#PBF	LTC489CSW#TRPBF	LTC489CSW	16-Lead Plastic SO	0°C to 70°C
LTC489IN#PBF	LTC489IN#TRPBF	LTC489IN	16-Lead Plastic DIP	–40°C to 85°C
LTC489ISW#PBF	LTC489ISW#TRPBF	LTC489ISW	16-Lead Plastic SO	–40°C to 85°C

Consult LTC Marketing for parts specified with wider operating temperature ranges.
Consult LTC Marketing for information on non-standard lead based finish parts.

For more information on lead free part marking, go to: http://www.linear.com/leadfree/
For more information on tape and reel specifications, go to: http://www.linear.com/tapeandreel/

DC ELECTRICAL CHARACTERISTICS

The ● denotes the specifications which apply over the full operating temperature range, otherwise specifications are at T_A = 25°C. V_{CC} = 5V (Notes 2, 3), unless otherwise noted.

SYMBOL	PARAMETER	CONDITIONS		MIN	TYP	MAX	UNITS
V_{INH}	Input High Voltage	EN, $\overline{EN}$, EN12, EN34	●	2.0			V
V_{INL}	Input Low Voltage	EN, $\overline{EN}$, EN12, EN34	●			0.8	V
I_{IN1}	Input Current	EN, $\overline{EN}$, EN12, EN34	●			±2	µA
I_{IN2}	Input Current (A, B)	V_{CC} = 0V or 5.25V, V_{IN} = 12V V_{CC} = 0V or 5.25V, V_{IN} = –7V	● ●			1.0 –0.8	mA mA
V_{TH}	Differential Input Threshold Voltage for Receiver	–7V ≤ V_{CM} ≤ 12V	●	–0.2		0.2	V
ΔV_{TH}	Receiver Input Hysteresis	V_{CM} = 0V			60		mV
V_{OH}	Receiver Output High Voltage	I_O = –4mA, V_{ID} = 0.2V	●	3.5			V
V_{OL}	Receiver Output Low Voltage	I_O = 4mA, V_{ID} = –0.2V	●			0.4	V
I_{OZR}	Three-State Output Current at Receiver	V_{CC} = Max 0.4V ≤ V_O ≤ 2.4V	●			±1	µA
I_{CC}	Supply Current	No Load, Digital Pins = GND or V_{CC}	●		7	10	mA
R_{IN}	Receiver Input Resistance	–7V ≤ V_{CM} ≤ 12V, V_{CC} = 0V	●	12			kΩ
I_{OSR}	Receiver Short-Circuit Current	0V ≤ V_O ≤ V_{CC}	●	7		85	mA
t_{PLH}	Receiver Input to Output	C_L = 15pF (Figures 1, 3)	●	12	28	55	ns
t_{PHL}	Receiver Input to Output	C_L = 15pF (Figures 1, 3)	●	12	28	55	ns
t_{SKD}	$\lvert t_{PLH} - t_{PHL} \rvert$ Differential Receiver Skew	C_L = 15pF (Figures 1, 3)			4		ns

The ● denotes the specifications which apply over the full operating temperature range, otherwise specifications are at T_A = 25°C. V_{CC} = 5V ± 5% (Notes 2, 3), unless otherwise noted.

SYMBOL	PARAMETER	CONDITIONS		MIN	TYP	MAX	UNITS
t_{ZL}	Receiver Enable to Output Low	C_L = 15pF (Figures 2, 4) S1 Closed	●		30	60	ns
t_{ZH}	Receiver Enable to Output High	C_L = 15pF (Figures 2, 4) S2 Closed	●		30	60	ns
t_{LZ}	Receiver Disable from Low	C_L = 15pF (Figures 2, 4) S1 Closed	●		30	60	ns
t_{HZ}	Receiver Disable from High	C_L = 15pF (Figures 2, 4) S2 Closed	●		30	60	ns

Note 1: Stresses beyond those listed under Absolute Maximum Ratings may cause permanent damage to the device. Exposure to any Absolute Maximum Rating condition for extended periods may affect device reliability and lifetime.

Note 2: All currents into device pins are positive; all currents out of device pins are negative. All voltages are referenced to device ground unless otherwise specified.

Note 3: All typicals are given for V_{CC} = 5V and T_A = 25°C.

TYPICAL PERFORMANCE CHARACTERISTICS

Receiver Output Low Voltage vs Temperature at I = 8mA

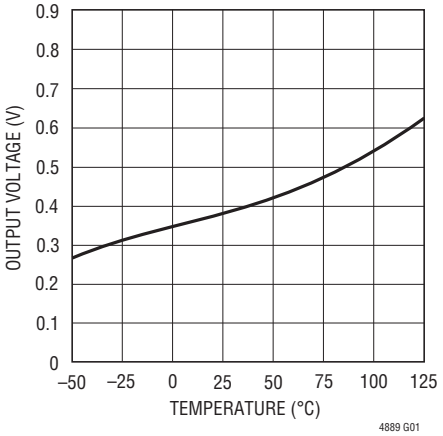

Receiver Output High Voltage vs Temperature at I = 8mA

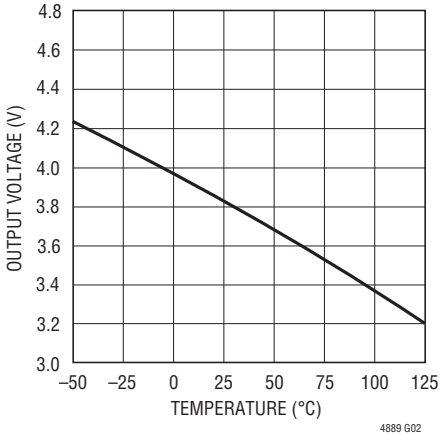

Receiver Output High Voltage vs Output Current at T_A = 25°C

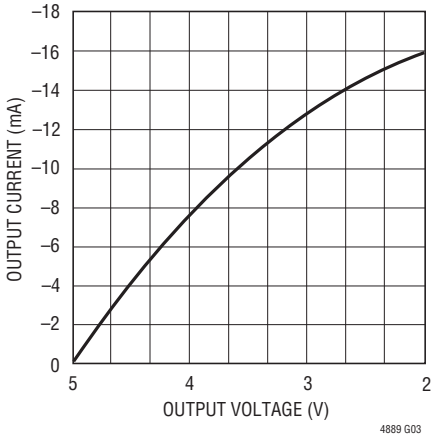

Receiver Output Low Voltage vs Output Current at T_A = 25°C

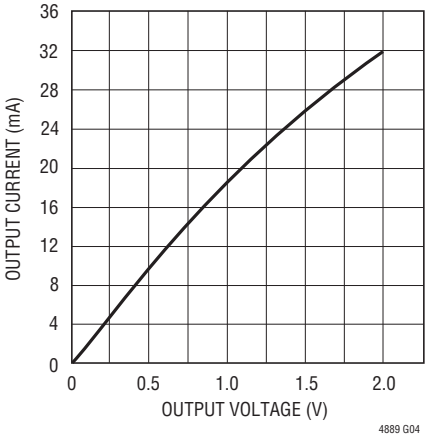

TTL Input Threshold vs Temperature

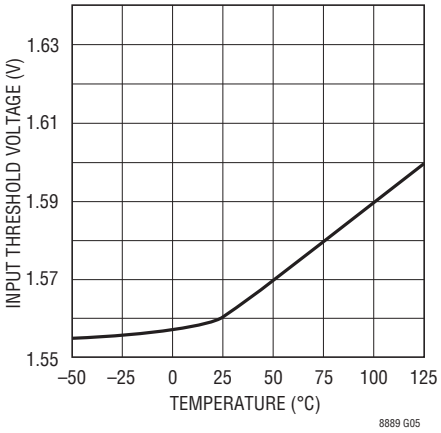

Receiver $|t_{PLH} - t_{PHL}|$ vs Temperature

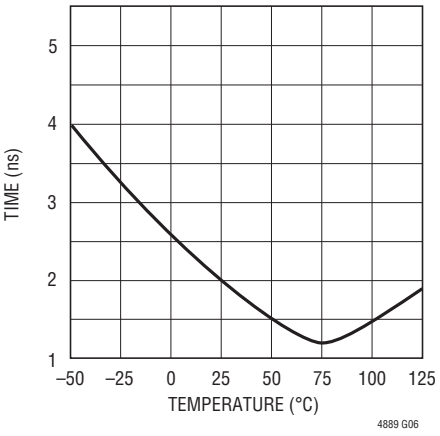

Supply Current vs Temperature

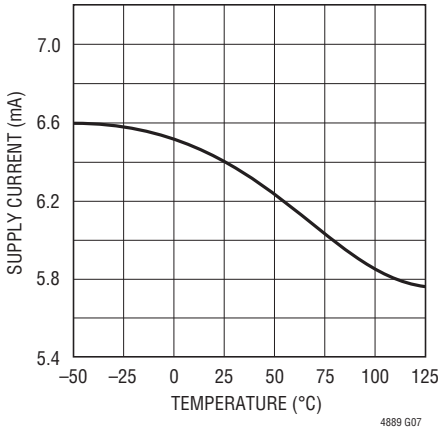

PIN FUNCTIONS

B 1 (Pin 1): Receiver 1 Input.

A1 (Pin 2): Receiver 1 Input.

RO1 (Pin 3): Receiver 1 Output. If the receiver output is enabled, then if A > B by 200mV, RO1 will be high. If A < B by 200mV, then RO1 will be low.

EN (Pin 4) LTC488: Receiver Output Enabled. See Function Table for details.

EN12 (Pin 4) LTC489: Receiver 1, Receiver 2 Output Enabled. See Function Table for details.

RO2 (Pin 5): Receiver 2 Output. Refer to RO1.

A2 (Pin 6): Receiver 2 Input.

B2 (Pin 7): Receiver 2 Input.

GND (Pin 8): Ground Connection.

B3 (Pin 9): Receiver 3 Input.

A3 (Pin 10): Receiver 3 Input.

RO3 (Pin 11): Receiver 3 Output. Refer to RO1.

$\overline{EN}$ (Pin 12) LTC488: Receiver Output Disabled. See Function Table for details.

EN34 (Pin 12) LTC489: Receiver 3, Receiver 4 output enabled. See Function Table for details.

RO4 (Pin 13): Receiver 4 Output. Refer to RO1.

A4 (Pin 14): Receiver 4 Input.

B4 (Pin 15): Receiver 4 Input.

V_{CC} (Pin 16): Positive Supply; $4.75V \le V_{CC} \le 5.25V$.

FUNCTION TABLES

LTC488

DIFFERENTIAL	ENABLES		OUTPUT
A – B	EN	$\overline{EN}$	RO
$V_{ID} \ge 0.2V$	H X	X L	H H
$-0.2V < V_{ID} < 0.2V$	H X	X L	? ?
$V_{ID} \le 0.2V$	H X	X L	L L
X	L	H	Z

LTC489

DIFFERENTIAL	ENABLES	OUTPUT
A – B	EN12 or EN34	RO
$V_{ID} \ge 0.2V$	H	H
$-0.2V < V_{ID} < 0.2V$	H	?
$V_{ID} \le 0.2V$	H	L
X	L	Z

H: High Level
L: Low Level
X: Irrelevant
?: Indeterminate
Z: High Impedance (Off)

TEST CIRCUITS

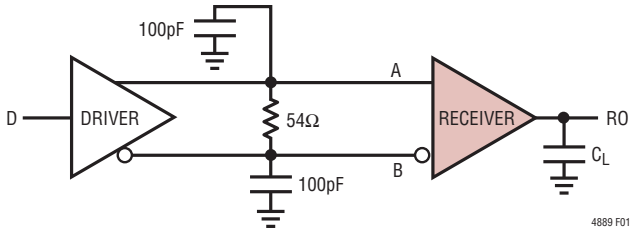

Figure 1. Receiver Timing Test Circuit

Note: The input pulse is supplied by a generator having the following characteristics: f = 1MHz, Duty Cycle = 50%, t_r < 10ns, t_f ≤ 10ns, Z_{OUT} = 50Ω

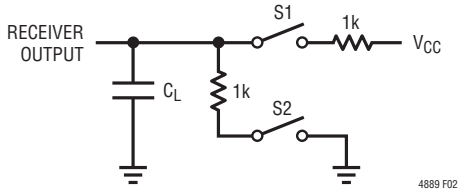

Figure 2. Receiver Enable and Disable Timing Test Circuit

SWITCHING TIME WAVEFORMS

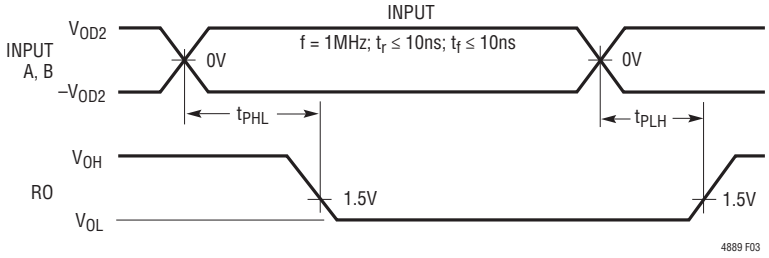

Figure 3. Receiver Propagation Delays

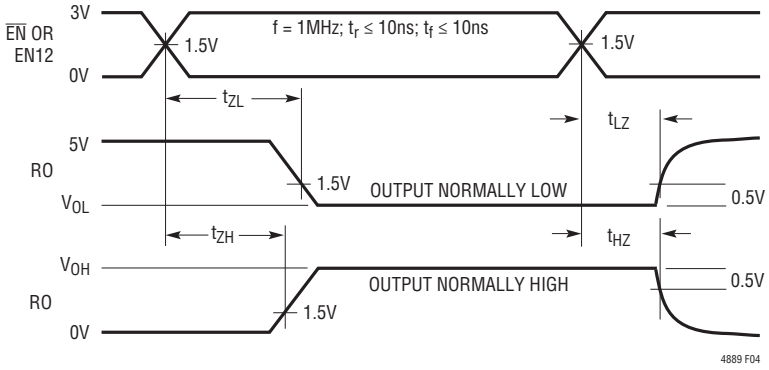

Figure 4. Receiver Enable and Disable Times

APPLICATIONS INFORMATION

Typical Application

A typical connection of the LTC488/LTC489 is shown in Figure 5. Two twisted-pair wires connect up to 32 driver/receiver pairs for half-duplex data transmission. There are no restrictions on where the chips are connected to the wires, and it isn't necessary to have the chips connected at the ends. However, the wires must be terminated only at the ends with a resistor equal to their characteristic impedance, typically 120Ω. The input impedance of a receiver is typically 20k to GND, or 0.5 unit RS485 load, so in practice 50 to 60 transceivers can be connected to the same wires. The optional shields around the twisted-pair help reduce unwanted noise, and are connected to GND at one end.

Cables and Data Rate

The transmission line of choice for RS485 applications is a twisted-pair. There are coaxial cables (twinaxial) made for this purpose that contain straight-pairs, but these are less flexible, more bulky, and more costly than twisted-pairs. Many cable manufacturers offer a broad range of 120Ω cables designed for RS485 applications.

Losses in a transmission line are a complex combination of DC conductor loss, AC losses (skin effect), leakage, and AC losses in the dielectric. In good polyethylene cable such as the Belden 9841, the conductor losses and dielectric losses are of the same order of magnitude, leading to relatively low overall loss (Figure 6).

When using low loss cables, Figure 7 can be used as a guideline for choosing the maximum line length for a given

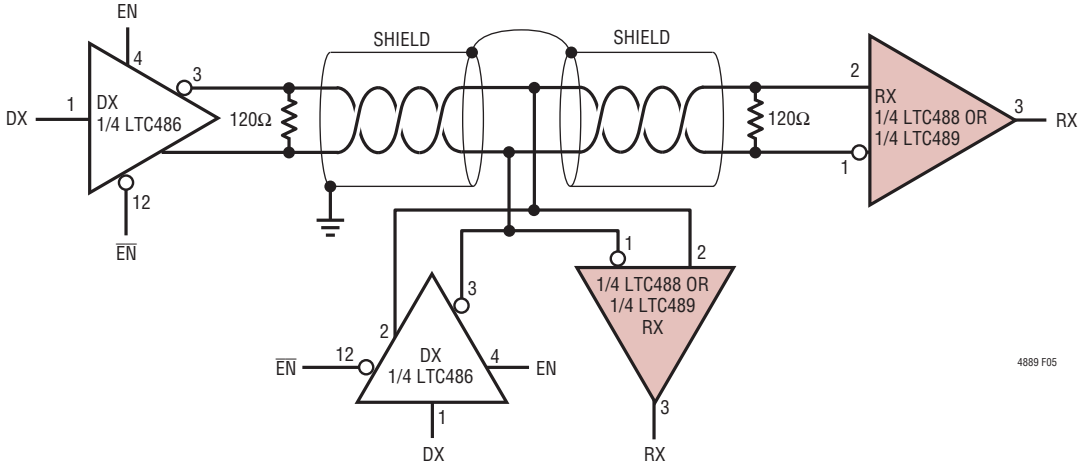

Figure 5. Typical Connection

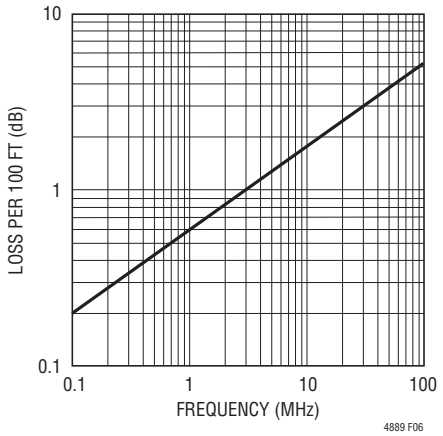

Figure 6. Attenuation vs Frequency for Belden 9841

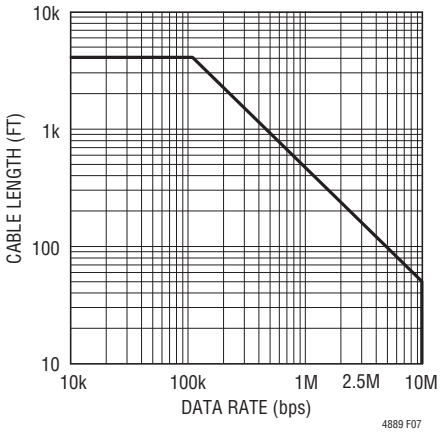

Figure 7. Cable Length vs Data Rate

APPLICATIONS INFORMATION

data rate. With lower quality PVC cables, the dielectric loss factor can be 1000 times worse. PVC twisted-pairs have terrible losses at high data rates (> 100kbps), and greatly reduce the maximum cable length. At low data rates however, they are acceptable and much more economical.

Cable Termination

The proper termination of the cable is very important. If the cable is not terminated with its characteristic impedance, distorted waveforms will result. In severe cases, distorted (false) data and nulls will occur. A quick look at the output of the driver will tell how well the cable is terminated. It is best to look at a driver connected to the end of the cable, since this eliminates the possibility of getting reflections from two directions. Simply look at the driver output while transmitting square wave data. If the cable is terminated properly, the waveform will look like a square wave (Figure 8).

If the cable is loaded excessively (47Ω), the signal initially sees the surge impedance of the cable and jumps to an initial amplitude. The signal travels down the cable and is reflected back out of phase because of the mistermination.

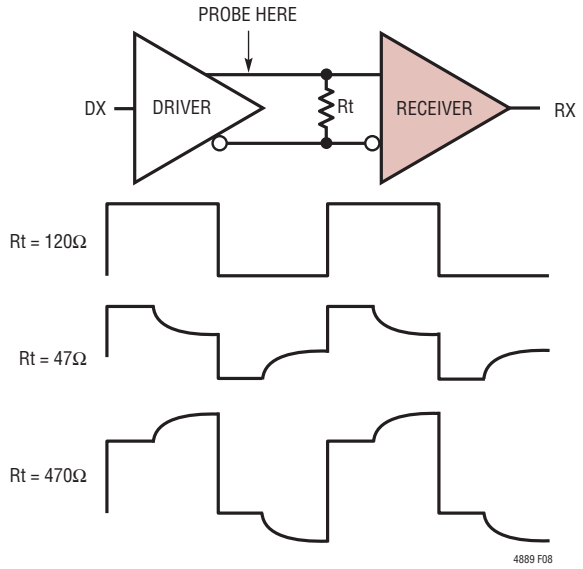

Figure 8. Termination Effects

When the reflected signal returns to the driver, the amplitude will be lowered. The width of the pedestal is equal to twice the electrical length of the cable (about 1.5ns/foot). If the cable is lightly loaded (470Ω), the signal reflects in phase and increases the amplitude at the drive output. An input frequency of 30kHz is adequate for tests out to 4000 ft. of cable.

AC Cable Termination

Cable termination resistors are necessary to prevent unwanted reflections, but they consume power. The typical differential output voltage of the driver is 2V when the cable is terminated with two 120Ω resistors, causing 33mA of DC current to flow in the cable when no data is being sent. This DC current is about 60 times greater than the supply current of the LTC488/LTC489. One way to eliminate the unwanted current is by AC coupling the termination resistors as shown in Figure 9.

The coupling capacitor must allow high frequency energy to flow to the termination, but block DC and low frequencies. The dividing line between high and low frequency depends on the length of the cable. The coupling capacitor must pass frequencies above the point where the line represents an electrical one-tenth wavelength. The value of the coupling capacitor should therefore be set at 16.3pF per foot of cable length for 120Ω cables. With the coupling capacitors in place, power is consumed only on the signal edges, and not when the driver output is idling at a 1 or 0 state. A 100nF capacitor is adequate for lines up to 4000 feet in length. Be aware that the power savings start to decrease once the data rate surpasses 1/(120Ω)(C).

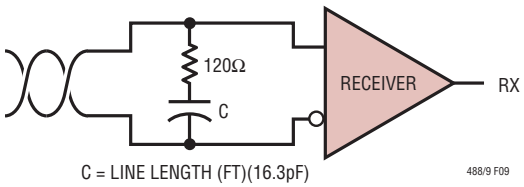

Figure 9. AC-Coupled Termination

APPLICATIONS INFORMATION

Receiver Open-Circuit Fail-Safe

Some data encoding schemes require that the output of the receiver maintains a known state (usually a logic 1) when the data is finished transmitting and all drivers on the line are forced in three-state. The receiver of the LTC488/LTC489 has a fail-safe feature which guarantees the output to be in a logic 1 state when the receiver inputs are left floating (open-circuit). When the input is terminated with 120Ω and the receiver output must be forced to a known state, the circuits of Figure 10 can be used.

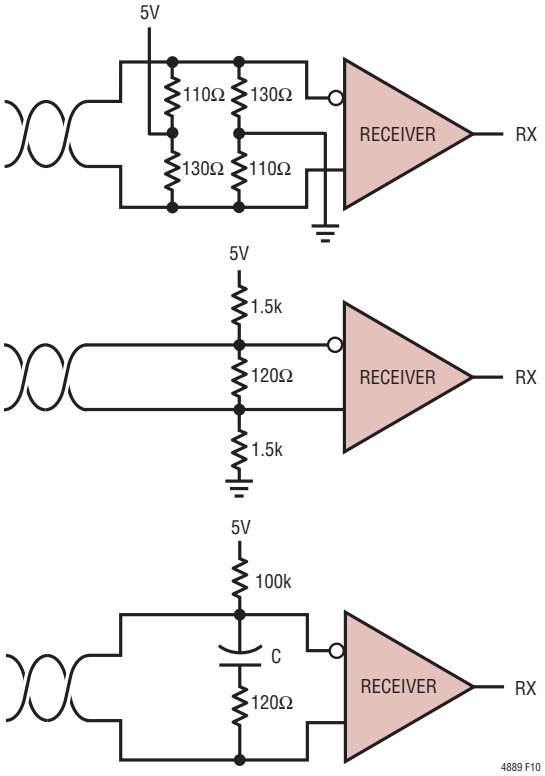

Figure 10. Forcing "0" When All Drivers Are Off

The termination resistors are used to generate a DC bias which forces the receiver output to a known state, in this case a logic 0. The first method consumes about 208mW and the second about 8mW. The lowest power solution is to use an AC termination with a pullup resistor. Simply swap the receiver inputs for data protocols ending in logic 1.

Fault Protection

All of LTC's RS485 products are protected against ESD transients up to 2kV using the human body model (100pF, 1.5k). However, some applications need more protection. The best protection method is to connect a bidirectional TransZorb® from each line side pin to ground (Figure 11).

A TransZorb is a silicon transient voltage suppressor that has exceptional surge handling capabilities, fast response time, and low series resistance. They are available from General instruments, GSI, and come in a variety of breakdown voltages and prices. Be sure to pick a breakdown voltage higher than the common mode voltage required for your application (typically 12V). Also, don't forget to check how much the added parasitic capacitance will load down the bus.

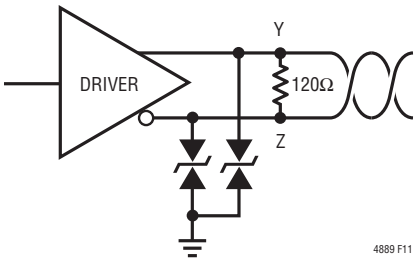

Figure 11. ESD Protection with TransZorbs

PACKAGE DESCRIPTION

N Package
16-Lead PDIP (Narrow .300 Inch)
(Reference LTC DWG # 05-08-1510)

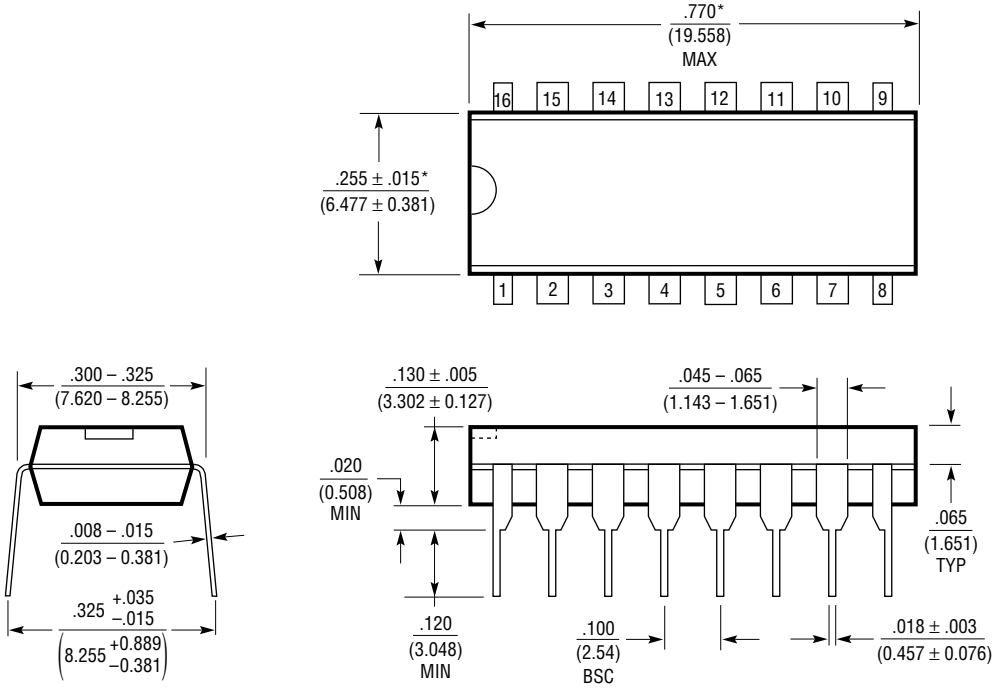

NOTE:
1. DIMENSIONS ARE $\frac{\text{INCHES}}{\text{MILLIMETERS}}$

*THESE DIMENSIONS DO NOT INCLUDE MOLD FLASH OR PROTRUSIONS.
MOLD FLASH OR PROTRUSIONS SHALL NOT EXCEED .010 INCH (0.254mm)

PACKAGE DESCRIPTION

SW Package
16-Lead Plastic Small Outline (Wide .300 Inch)
(Reference LTC DWG # 05-08-1620)

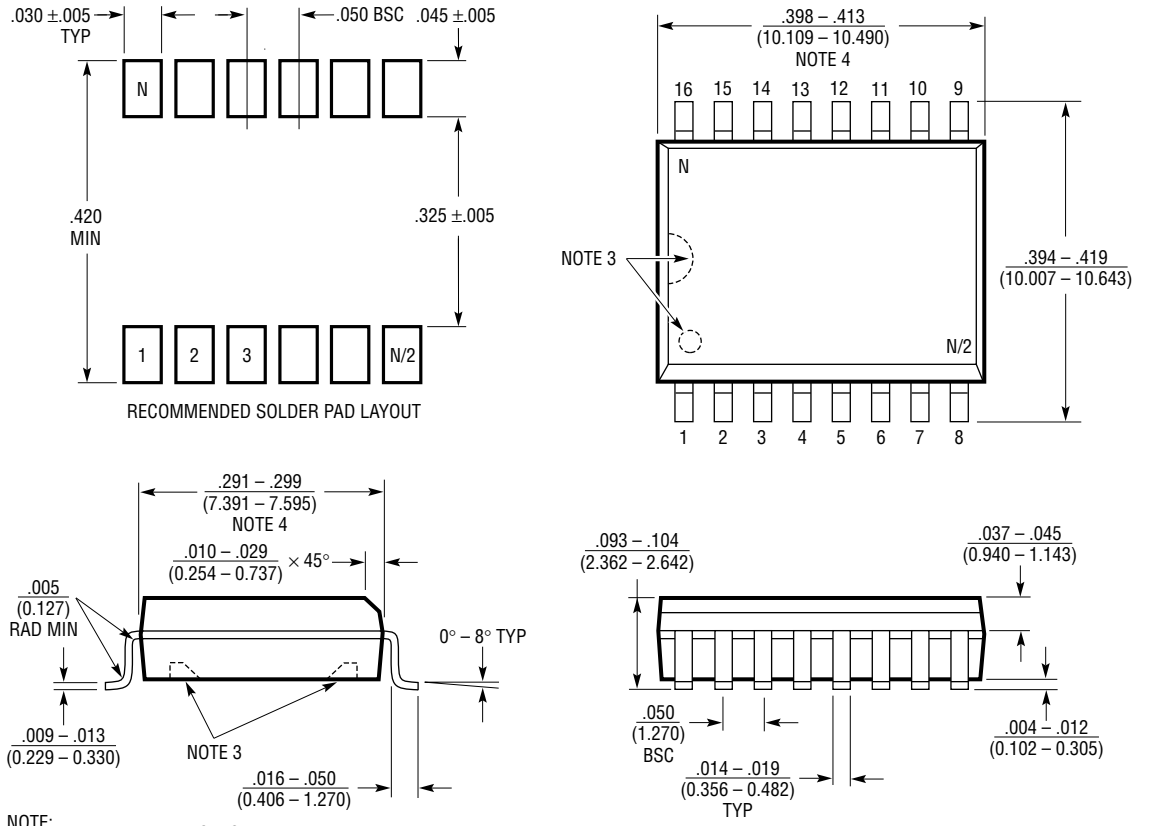

NOTE:
1. DIMENSIONS IN $\frac{\text{INCHES}}{\text{(MILLIMETERS)}}$
2. DRAWING NOT TO SCALE
3. PIN 1 IDENT, NOTCH ON TOP AND CAVITIES ON THE BOTTOM OF PACKAGES ARE THE MANUFACTURING OPTIONS. THE PART MAY BE SUPPLIED WITH OR WITHOUT ANY OF THE OPTIONS
4. THESE DIMENSIONS DO NOT INCLUDE MOLD FLASH OR PROTRUSIONS. MOLD FLASH OR PROTRUSIONS SHALL NOT EXCEED .006" (0.15mm)

Information furnished by Linear Technology Corporation is believed to be accurate and reliable. However, no responsibility is assumed for its use. Linear Technology Corporation makes no representation that the interconnection of its circuits as described herein will not infringe on existing patent rights.

TYPICAL APPLICATION

RS232 Receiver

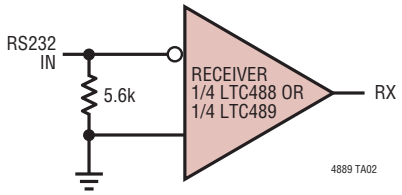

RELATED PARTS

PART NUMBER	DESCRIPTION	COMMENTS
LTC485	Low Power RS485 Transceiver	Low Power, Half-Duplex
LTC490	Low Power RS485 Full-Duplex Transceiver	Full-Duplex in SO-8
LTC1480	3V, Ultralow Power RS485 Transceiver	1µA Shutdown Mode
LTC1481	3V, Ultralow Power RS485 Transceiver	Lowest Power on 5V Supply
LTC1483	Ultralow Power RS485 Low EMI Transceiver	Low EMI/Low Power with Shutdown
LTC1485	Fast RS485 Transceiver	10Mbps Operation
LTC1487	Ultralow Power RS485 with Low EMI and High Input Impedance	Up to 256 Nodes on a Bus
LTC1685	High Speed RS485 Transceiver	52Mbps, Pin Compatible with LTC485
LTC1686/LTC1687	High Speed RS485 Full-Duplex Transceiver	52Mbps, Pin Compatible LTC490/LTC491

Linear Technology Corporation
1630 McCarthy Blvd., Milpitas, CA 95035-7417
(408) 432-1900 • FAX: (408) 434-0507 • www.linear.com

LT 0309 REV B • PRINTED IN USA

© LINEAR TECHNOLOGY CORPORATION 1992

Looking for pricing, stock, or lifecycle information?

Click below to explore more details on WIN SOURCE:

- View LTC489CN#PBF on WIN SOURCE
- Linear Technology Information

Optimize Your Supply Chain with WIN SOURCE Solutions

- Global Sourcing Solution
- Obsolete Management
- Cost Control Management
- Shortage Management
- Alternative Solution
- Excess Inventory Management