# THE DATASHEET OF

# LTC1042CN8#PBF

www.win-source.net 0086-755-83957316

# Window Comparator

## FEATURES

- Micropower 1.5μW (1 Sample/Second)
- Wide Supply Range — 2.8V to 16V
- High Accuracy
  - Center Error ±1mV Max
  - Width Error ±0.15% Max
- Wide Input Voltage Range
  - $V^+$ to Ground
- TTL Outputs with 5V Supply
- Two Independent Ground-Referred Control Inputs
- Small Size 8-Pin MiniDIP

## APPLICATIONS

- Fault Detectors
- Go/No-Go Testing
- Microprocessor Power Supply Monitor

LT, LTC and LT are registered trademarks of Linear Technology Corporation.
LTCMOS is a trademark of Linear Technology Corp.

## DESCRIPTION

The LTC®1042 is a monolithic CMOS window comparator manufactured using Linear Technology's enhanced LTCMOS™ silicon gate process. Two high impedance voltage inputs, CENTER and WIDTH/2, define the middle and width of the comparison window. Whenever the input voltage, $V_{IN}$, is inside the window the WITHIN WINDOW output is high. The ABOVE WINDOW output is high whenever $V_{IN}$ is above the window. By interchanging $V_{IN}$ and CENTER, the ABOVE WINDOW output becomes BELOW WINDOW and is high if $V_{IN}$ is below the window.

Sampling techniques provide high impedance voltage inputs that can common mode to both supply rails ($V^+$ and GND). An important feature of the inputs is their non-interaction. Also the device is effectively "chopper stabilized," giving it extremely high accuracy over all conditions of temperature, power supply and input voltage range.

Another benefit of the sampling techniques used to design the LTC1042 is the extremely low power consumption. When the device is strobed, it internally turns on the power to the comparators, samples the inputs, stores the outputs in CMOS latches and then turns off power to the comparators. This all happens in about 80μs. Average power can be made small, almost arbitrarily, by lowering the strobe rate. The device can be self-strobed using an external RC network or strobed externally by driving the OSC pin with a CMOS gate.

## TYPICAL APPLICATION

**Battery-Powered Remote Freezer Alarm**

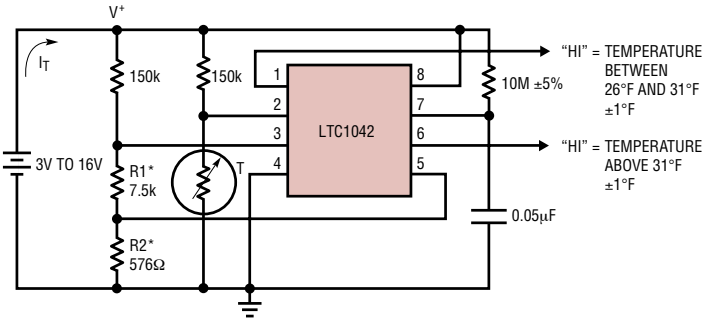


T = YELLOW SPRINGS INSTRUMENT CO., INC. P/N 44007
ALL RESISTORS ±1% UNLESS OTHERWISE SPECIFIED
*OTHER TEMPERATURE BANDS MAY BE SELECTED BY CHOOSING APPROPRIATE VALUES FOR R1 AND R2

LTC1042 • A01

**Total Supply Current vs Sampling Frequency**

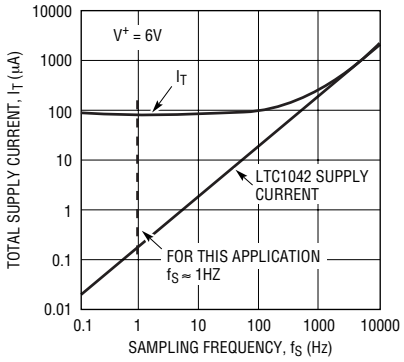


LTC1042 • TA02

## ABSOLUTE MAXIMUM RATINGS

**(Note 1)**

Total Supply Voltage ($V^+$ to GND) ..... 18V
Input Voltage ..... $V^+$ +0.3V to –0.3V
Operating Temperature Range
  LTC1042C ..... –40°C to 85°C
  LTC1042M **(OBSOLETE)** ..... –55°C to 125°C
Storage Temperature Range ..... –55°C to 150°C
Lead Temperature (Soldering, 10 sec) ..... 300°C
Output Short Circuit Duration ..... Continuous

## PACKAGE/ORDER INFORMATION

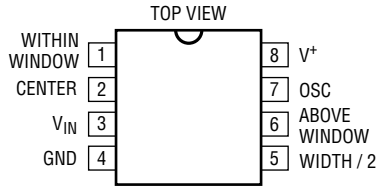


N8 PACKAGE
8-LEAD PDIP
$T_{JMAX}$ = 110°C, $\theta_{JA}$ = 150°C/W

| ORDER PART NUMBER |
|---|
| LTC1042CN8 |
| LTC1042MJ8 |

J8 PACKAGE
8-LEAD CERDIP

**OBSOLETE PACKAGE**
Consider the N8 Package as an Alternate Source

LTC1042 • POI01

Consult LTC Marketing for parts specified with wider operating temperature ranges.

## ELECTRICAL CHARACTERISTICS

**The ● denotes the specifications which apply over the full operating temperature range, otherwise specifications are at $T_A$ = 25°C.**

| SYMBOL | PARAMETER | TEST CONDITIONS | | MIN | TYP | MAX | UNITS |
|---|---|---|---|---|---|---|---|
| | Center Error (Note 3) | $V^+$ = 2.8V to 6V (Note 2) | ● | | ±0.3 + ±0.05 | ±1 + ±0.15 | mV % WIDTH/2 |
| | | $V^+$ = 6V to 15V (Note 2) | ● | | ±1 + ±0.05 | ±3 + ±0.15 | mV % WIDTH/2 |
| | Width Error (Note 4) | $V^+$ = 2.8V to 6V (Note 2) | ● | | ±0.6 + ±0.1 | ±2 + ±0.3 | mV % WIDTH/2 |
| | | $V^+$ = 6V to 15V (Note 2) | ● | | ±2 + ±0.1 | ±6 + ±0.3 | mV % WIDTH/2 |
| $I_{BIAS}$ | Input Bias Current | $V^+$ = 5V, $T_A$ = 25°C, OSC = GND $V_{IN}$, CENTER and WIDTH/2 Inputs | | | ±0.3 | | nA |
| $R_{IN}$ | Average Input Resistance | $f_S$ = 1kHz (Note 5) | ● | 10 | 15 | | MΩ |
| | Input Voltage Range | | ● | GND | | $V^+$ | V |
| PSR | Power Supply Range | | ● | 2.8 | | 16 | V |
| $I_{S(ON)}$ | Power Supply ON Current (Note 6) | $V^+$ = 5V | ● | | 1.2 | 3 | mA |
| $I_{S(OFF)}$ | Power Supply OFF Current (Note 6) | $V^+$ = 5V, LTC1042C<br>LTC1042M | ●<br>● | | 0.001<br>0.001 | 0.5<br>5.0 | µA<br>µA |
| $T_D$ | Response Time (Note 7) | $V^+$ = 5V | | | 80 | 100 | µs |
| | Output Levels | | | | | | |
| $V_{OH}$ | Logic 1 Output | $V^+$ = 4.75V, $I_{OUT}$ = –360µA | ● | 2.4 | 4.4 | | V |
| $V_{OL}$ | Logical 0 Output | $V^+$ = 4.75V, $I_{OUT}$ = –1.6mA | ● | | 0.25 | 0.45 | V |

## ELECTRICAL CHARACTERISTICS

**The ● denotes the specifications which apply over the full operating temperature range, otherwise specifications are at $T_A$ = 25°C.**

| SYMBOL | PARAMETER | TEST CONDITIONS | | MIN | TYP | MAX | UNITS |
|---|---|---|---|---|---|---|---|
| $R_{EXT}$ | External Timing Resistor | Resistor connected between $V^+$ and OSC Pin | ● | 100 | | 10,000 | kΩ |
| $f_S$ | Sampling Frequency | $V^+$ = 5V, $T_A$ = 25°C<br>$R_{EXT}$ =1MΩ, $C_{EXT}$ = 0.1μF | | | 5 | | Hz |

**Note 1:** Absolute Maximum Ratings are those values beyond which the life of a device may be impaired.

**Note 2:** Applies over input voltage range limit and includes gain uncertainty.

**Note 3:** Center error = [($V_U$ +$V_L$)/2 – CENTER] (where $V_U$ = upper band limit and $V_L$ = lower band limit).

**Note 4:** Width error = ($V_U$ –$V_L$ – 2 • WIDTH/2) (where $V_U$ = upper band limit and $V_L$ = lower band limit).

**Note 5:** $R_{IN}$ is guaranteed by design and is not tested. $R_{IN}$ = 1/($f_S$ x 66pF).

**Note 6:** Average supply current = $T_D$ • $I_{S(ON)}$ • $f_{S + (1 - T_D f_S)}$ $I_{S(OFF)}$.

**Note 7:** Response time is set by an internal oscillator and is independent of overdrive voltage. $T_D$ is guaranteed by correlation test and is not directly measured.

## TYPICAL PERFORMANCE CHARACTERISTICS

**$I_{S(ON)}$ vs $V^+$**

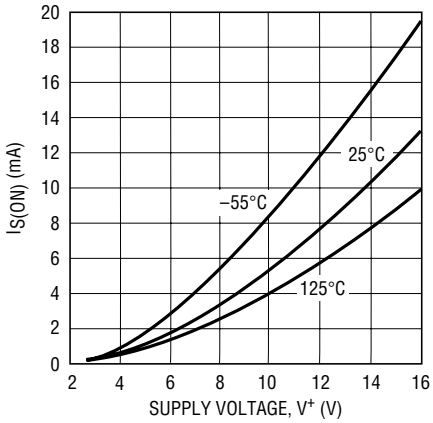


**Normalized Sampling Frequency vs $V^+$, Temperature**

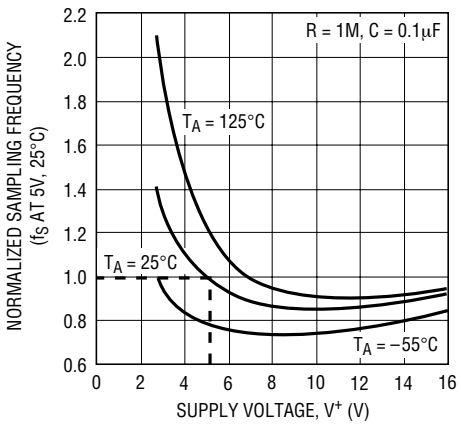


**Sampling Rate vs $R_{EXT}$ $C_{EXT}$**

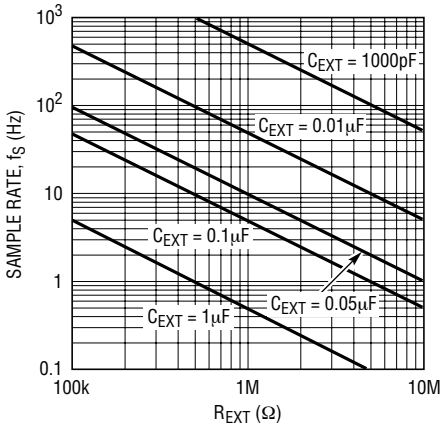


**Response Time vs Supply Voltage**

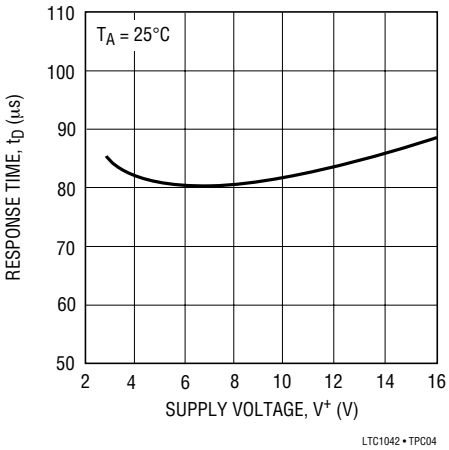


**Response Time vs Temperature**

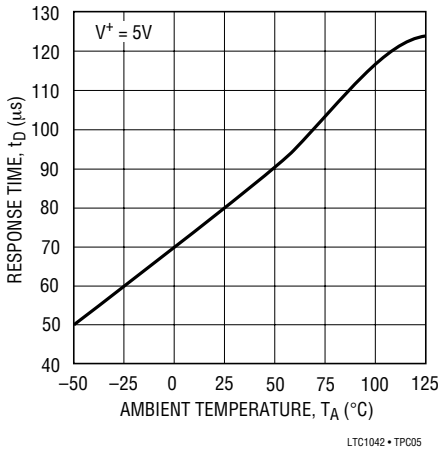


**$R_{IN}$ vs Sampling Frequency**

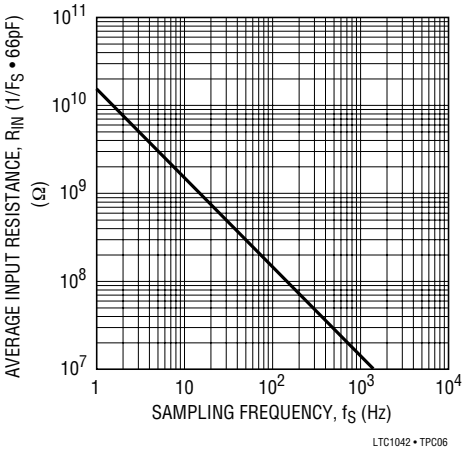

## APPLICATIONS INFORMATION

The LTC1042 uses sampled data techniques to achieve its unique characteristics. It consists of two comparators, each of which has two differential inputs (Figure 1). When the sum of the voltages on a comparator's inputs is positive, the output is high; when the sum is negative, the output is low. The inputs are interconnected such that when (CENTER – WIDTH/2) ≤ $V_{IN}$ ≤ (CENTER + WIDTH/2) both comparator outputs are low. In this condition $V_{IN}$ is within the window and the WITHIN WINDOW output is high. When $V_{IN}$ > CENTER + WIDTH/2, $V_{IN}$ is above the window and the ABOVE WINDOW output is high.

An important feature of the LTC1042 is the non-interaction of the inputs. This means the center and width of the window can be changed without one affecting the other. Also note that the width of the window is set by a ground referred signal WIDTH/2).

### Strobing

An internal oscillator allows the LTC1042 to strobe itself. The frequency of oscillation sets the sampling rate and is set with an external RC network (see typical curve, OSC frequency vs $R_{EXT}$, $C_{EXT}$). To assure oscillation, under all conditions, $R_{EXT}$ must be between 100kΩ and 10MΩ. There is no limit to the size of $C_{EXT}$.

A sampling cycle is initiated on the positive going transition of the voltage on the OSC pin. When this voltage is near the positive supply, a Schmitt trigger trips and initiates the sampling cycle. A sampling cycle consists of applying power to both comparators, sampling the inputs, storing the results in CMOS output latches and turning the power off. This whole process takes approximately 80μs. During the 80μs "active" time, the LTC1042 draws typically 1.2mA ($I_{S(ON)}$) at $V^+$ = 5V. Because power is consumed only during the "active" time, extremely low average power consumption can be achieved at low sample rates. For example, at a sample rate of 1 sample/second the average power consumption is:

$$\text{Power} = (V^+)\,(I_{S(AVG)}) = 5V \bullet 1.2mA \bullet 80\mu s/1sec = 0.48\mu W$$

At low sampling rates, $R_{EXT}$ dominates the power consumption. $R_{EXT}$ consumes power continuously. The average voltage at the OSC pin is approximately $V^+/2$. The power consumed by $R_{EXT}$ is:

$$P(R_{EXT}) = (V^+/2)^2 R_{EXT}$$

Example: Assume $R_{EXT}$ = 1MΩ and $V^+$ = 5V. Then:

$$P(R_{EXT}) = (2.5)^2/1M\Omega = 6.25\mu W$$

This is more than ten times the typical power consumed by the LTC1042 at $V^+$ = 5V and 1 sample/second. Where power is a premium, $R_{EXT}$ should be made as large as possible. Note that the power dissipated by $R_{EXT}$ is *not* a function of the sampling frequency or $C_{EXT}$.

If high sampling rates are needed and power consumption is of secondary importance, a convenient way to get the maximum possible sampling rate is to make $R_{EXT}$ = 100kΩ and $C_{EXT}$ = 0. The sampling rate, set by the LTC1042's active time, will nominally be ≈ 10kHz.

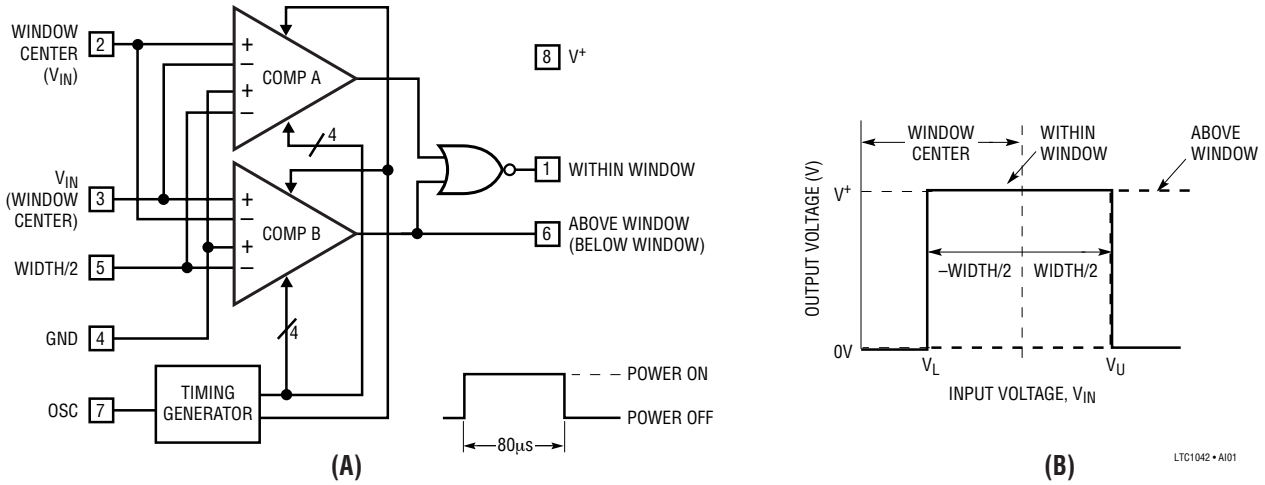


**Figure 1. LTC1042 Block Diagram**

## APPLICATIONS INFORMATION

To synchronize the sampling of the LTC1042 to an external frequency source, the OSC pin can be driven by a CMOS gate. A CMOS gate is necessary because the input trip points of the oscillator are close to the supply rails and TTL does not have enough output swing. Externally driven, there will be a delay from the rising edge of the OSC input and the start of the sampling cycle of approximately 5μs.

### Input Impedance

The input impedance of the LTC1042 does not look like a classic linear comparator; CMOS switches and a precision capacitor array form the dual differential input structure. Input impedance characteristics can be determined from the equivalent circuit shown in Figure 2. The input capacitance will charge with a time constant of $R_S \bullet C_{IN}$. It is critical, in determining errors caused by the input charging current, that $C_{IN}$ be fully charged during the "active" time.

### For $R_S \leq 10k\Omega$

For Rs less than or equal to 10kΩ, $C_{IN}$ fully charges and no error is caused by the charging current.

### For $R_S > 10k\Omega$

For source resistances greater than 10kΩ, $C_{IN}$ cannot fully charge, causing voltage errors. To minimize these errors an input bypass capacitor, $C_S$ should be used. Charge is shared between $C_{IN}$ and $C_S$ causing a voltage error. The magnitude of this error is $\Delta V = V_{IN} \times C_{IN}/(C_{IN} + C_S)$. This error can be made arbitrarily small by increasing $C_S$.

The averaging effect of the bypass capacitor $C_S$ causes another error term. Each time the input switches cycle between the plus and minus inputs, $C_{IN}$ is charged and discharged. The average input current due to this is $I_{AVG} = V_{IN} \times C_{IN} \times f_S$, where $f_S$ is the sampling frequency. Because the input current is directly proportional to the differential input voltage, the LTC1042 can be said to have an average input resistance of $R_{IN} = V_{IN}/I_{AVG} = 1/(f_S \times C_{IN})$.

Since two comparator inputs are connected in parallel, $R_{IN}$ is one half this value (see typical curve of $R_{IN}$ vs Sampling Frequency). This finite input resistance causes an error due to voltage divided between $R_S$ and $R_{IN}$.

The input error caused by both of these effects is $V_{ERROR} = V_{IN}[2C_{IN}/(2C_{IN} + C_S) + R_S/(R_S + R_{IN})]$.

EXAMPLE: Assume $f_S$ = 10Hz, $R_S$ = 1MΩ, $C_S$ = 1μF and $V_{IN}$ = 1V. Then $V_{ERROR}$ = 1V(66μV + 660μV) = 726μV. If the sampling frequency is reduced to 1Hz, the voltage error from input impedance effects is reduced to 136μV.

### Input Voltage Range

The input switches of the LTC1042 are capable of switching either to the $V^+$ supply or ground. Consequently, the input voltage range includes both supply rails. This is a further benefit of the input sampling structure.

### Error Specifications

The only measurable errors on the LTC1042 are the deviations from "ideal" of the upper and lower window limits [Figure 1(B)]. The critical parameters for a window comparator are the width and center of the window. These errors may be expressed in terms of $V_U$ and $V_L$.

center error = $[(V_U + V_L)/2]$ – CENTER

width error = $(V_U - V_L)$ – 2 x (WIDTH/2)

The specified error limits (see Electrical Characteristics) include error due to offset, power supply variation, gain, time and temperature.

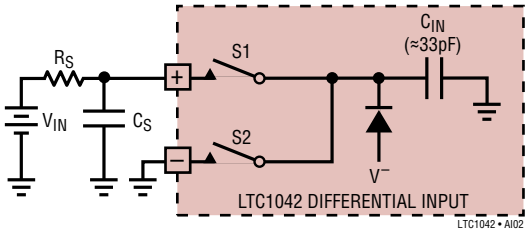


**Figure 2. Equivalent Input Circuit**

## APPLICATIONS INFORMATION

### TTL Power Supply Monitor

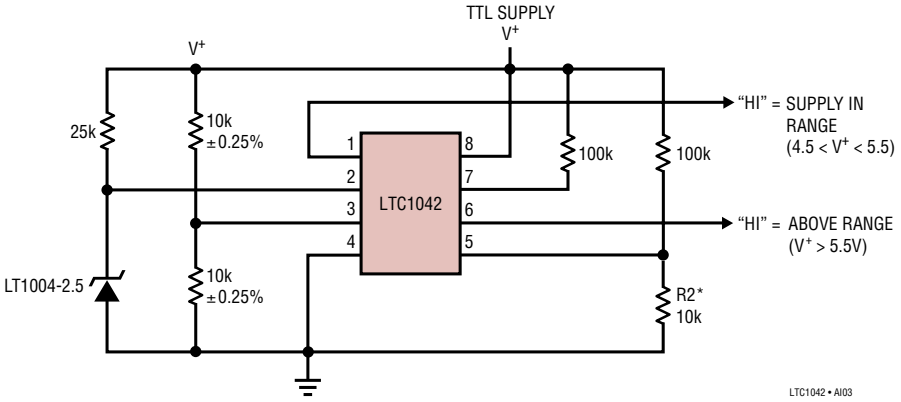


ALL RESISTORS ±5% UNLESS OTHERWISE NOTED
*SUPPLY TOLERANCE EQUALS R2 IN kΩ. I.E., 10k = ±10%

### Single 5V Thermocouple Over Temperature Alarm

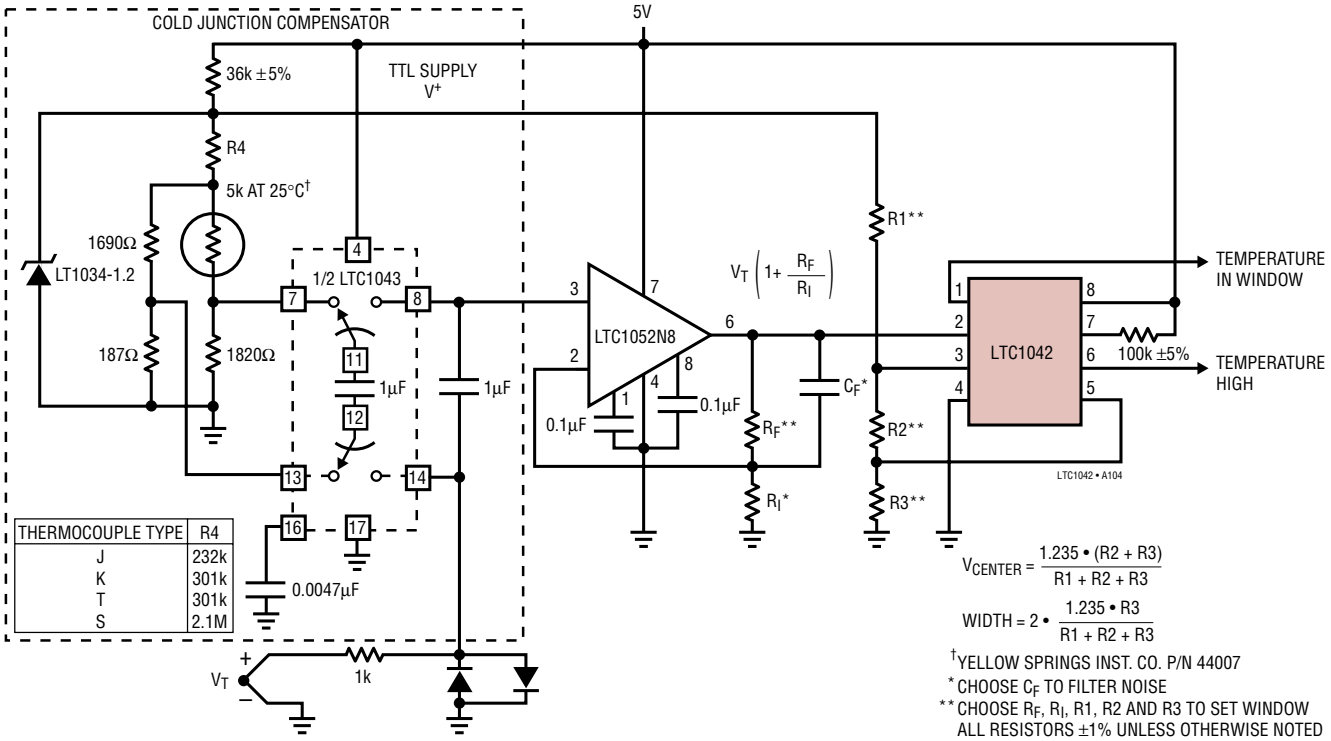


$$V_{CENTER} = \frac{1.235 \bullet (R2 + R3)}{R1 + R2 + R3}$$

$$WIDTH = 2 \bullet \frac{1.235 \bullet R3}{R1 + R2 + R3}$$

†YELLOW SPRINGS INST. CO. P/N 44007
*CHOOSE $C_F$ TO FILTER NOISE
**CHOOSE $R_F$, $R_I$, R1, R2 AND R3 TO SET WINDOW
ALL RESISTORS ±1% UNLESS OTHERWISE NOTED

## APPLICATIONS INFORMATION

### Wind Powered Battery Charger

A simple wind powered battery charger can be constructed using the new LTC1042, a 12V DC permanent magnet motor, and low cost power FET transistor.

The DC motor is used as a generator with the voltage output being proportional to its RPM. The LTC1042 monitors the voltage output and provides the following control functions:

1) If generator voltage output is below 13.8V, the control circuit is active and the NiCad battery is charging through the LM334 current source. The lead acid battery is not being charged.
2) If the generator voltage output is between 13.8V and 15.1V, the 12V lead acid battery is being charged at about a 1A/hour rate (limited by the power FET).
3) If generator voltage exceeds 15.1V (a condition caused by excessive wind speed or 12V battery being fully charged) then a fixed load is connected thus limiting the generator RPM to prevent damage.

This charger can be used as a remote source of power where wind energy is plentiful, such as on sailboats or remote radio repeater sites. Unlike solar powered panels, this system will function in bad weather and at night.

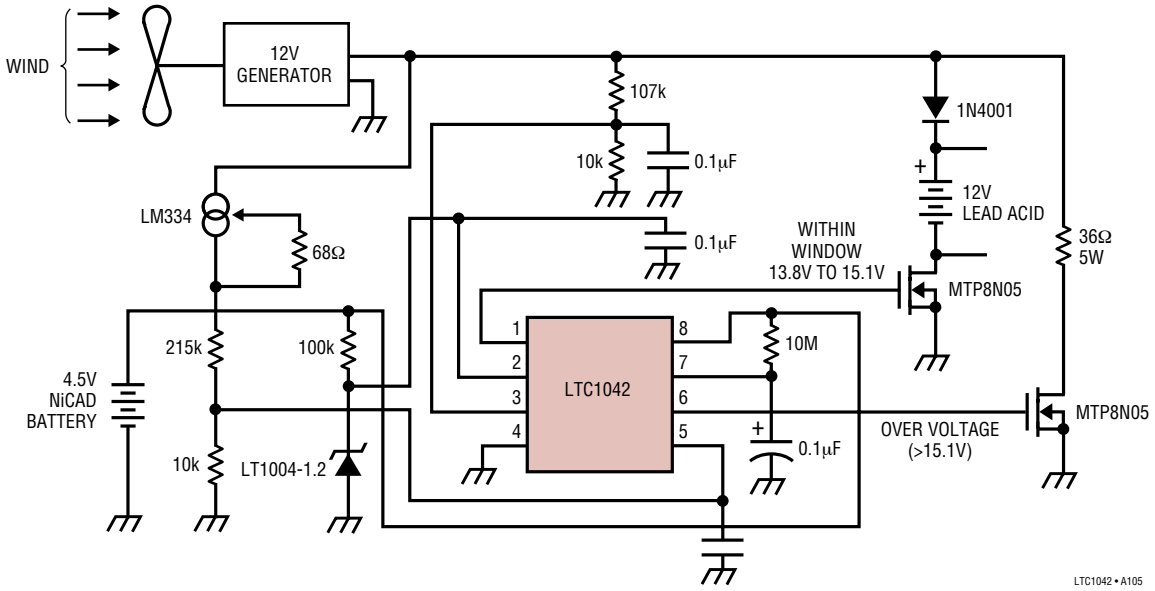




Information furnished by Linear Technology Corporation is believed to be accurate and reliable. However, no responsibility is assumed for its use. Linear Technology Corporation makes no representation that the interconnection of its circuits as described herein will not infringe on existing patent rights.

# PACKAGE DESCRIPTION

**J8 Package**
**8-Lead CERDIP (Narrow .300 Inch, Hermetic)**
(Reference LTC DWG # 05-08-1110)

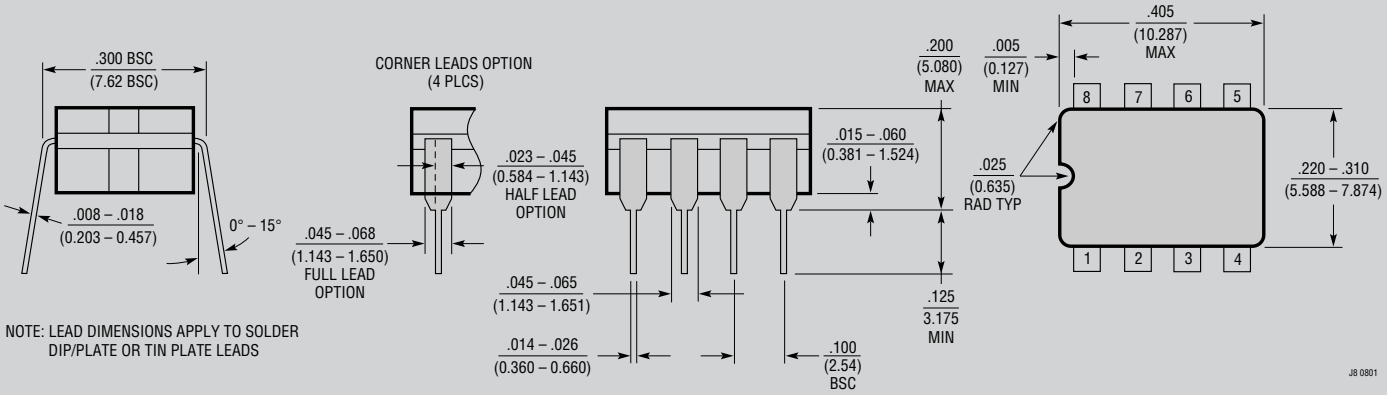


**OBSOLETE PACKAGE**

**N8 Package**
**8-Lead PDIP (Narrow .300 Inch)**
(Reference LTC DWG # 05-08-1510)

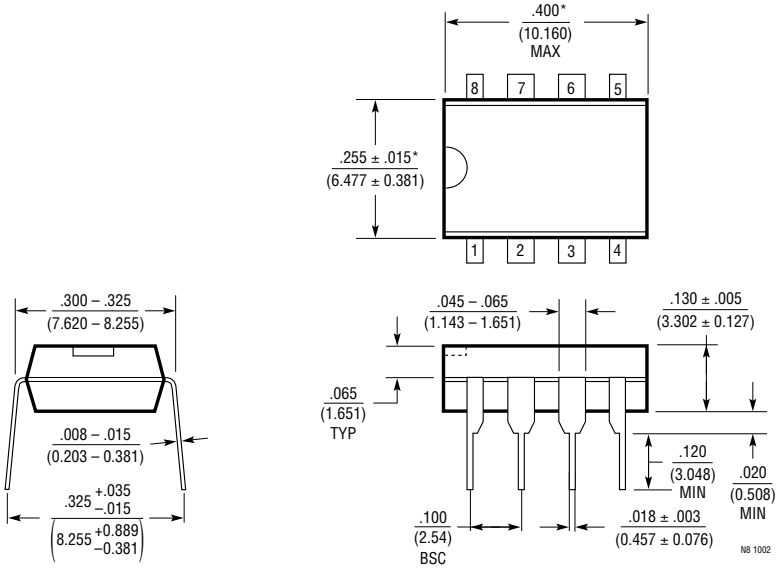


NOTE:
1. DIMENSIONS ARE $\frac{\text{INCHES}}{\text{MILLIMETERS}}$

*THESE DIMENSIONS DO NOT INCLUDE MOLD FLASH OR PROTRUSIONS.
MOLD FLASH OR PROTRUSIONS SHALL NOT EXCEED .010 INCH (0.254mm)


Linear Technology Corporation
1630 McCarthy Blvd., Milpitas, CA 95035-7417
(408) 432-1900 • FAX: (408) 434-0507 • www.linear.com
LW/TP 1202 1K REV A • PRINTED IN USA
© LINEAR TECHNOLOGY CORPORATION 1988

## Looking for pricing, stock, or lifecycle information?

Click below to explore more details on WIN SOURCE:

- View LTC1042CN8#PBF on WIN SOURCE
- Linear Technology Information

## Optimize Your Supply Chain with WIN SOURCE Solutions

- Global Sourcing Solution
- Obsolete Management
- Cost Control Management
- Shortage Management
- Alternative Solution
- Excess Inventory Management