THE DATASHEET OF

LM48556TLBD

www.win-source.net 0086-755-83957316

LM48556 Boomer™ Fully Differential, Mono, Ceramic Speaker Driver

Check for Samples: LM48556

FEATURES

- **Fully Differential Amplifier**
- **Externally Configurable Gain**
- **Integrated Charge Pump**
- **Low Power Shutdown Mode**
- **Soft Start Function**

APPLICATIONS

- **Mobile Phones**
- **PDA's**
- **Digital Cameras**

KEY SPECIFICATIONS

- **Output Voltage Swing**
  - **V_{DD} = 3.6V, 1kHz 14.2V_{PP} (typ)**
  - **V_{DD} = 4.5V, 1kHz 17.5V_{PP} (typ)**
- **Power Supply Rejection Ratio**
  - **f = 217Hz, V_{DD} = 3.6V 80dB (typ)**
- **I_{DD} at V_{DD} = 3.6V 4.8mA (typ)**
- **Wake-Up Time 0.5ms (typ)**

DESCRIPTION

The LM48556 is a single supply, mono, ceramic speaker driver with an integrated charge-pump, designed for portable devices, such as cell phones, where board space is at a premium. The LM48556 charge pump allows the device to deliver 17.5V_{PP} (typ) from a single 4.5V supply. Additionally, the charge pump features a soft start function that minimizes transient current during power-up.

The LM48556 features high power supply rejection ratio (PSRR) of 80dB at 217Hz, allowing the device to operate in noisy environments without additional power supply conditioning. Flexible power supply requirements allow operation from 2.7V to 5.0V. Additionally, the LM48556 features a differential input function and an externally configurable gain. A low power shutdown mode reduces supply current consumption to 0.1μA.

Superior click and pop suppression eliminates audible transients on power-up/down and during shutdown. The LM48556 is available in an ultra-small 12-bump DSBGA package (2mm x 1.5mm).

Please be aware that an important notice concerning availability, standard warranty, and use in critical applications of Texas Instruments semiconductor products and disclaimers thereto appears at the end of this data sheet.

Boomer is a trademark of Texas Instruments.
All other trademarks are the property of their respective owners.

PRODUCTION DATA information is current as of publication date. Products conform to specifications per the terms of the Texas Instruments standard warranty. Production processing does not necessarily include testing of all parameters.

Copyright © 2008–2013, Texas Instruments Incorporated

TYPICAL APPLICATION

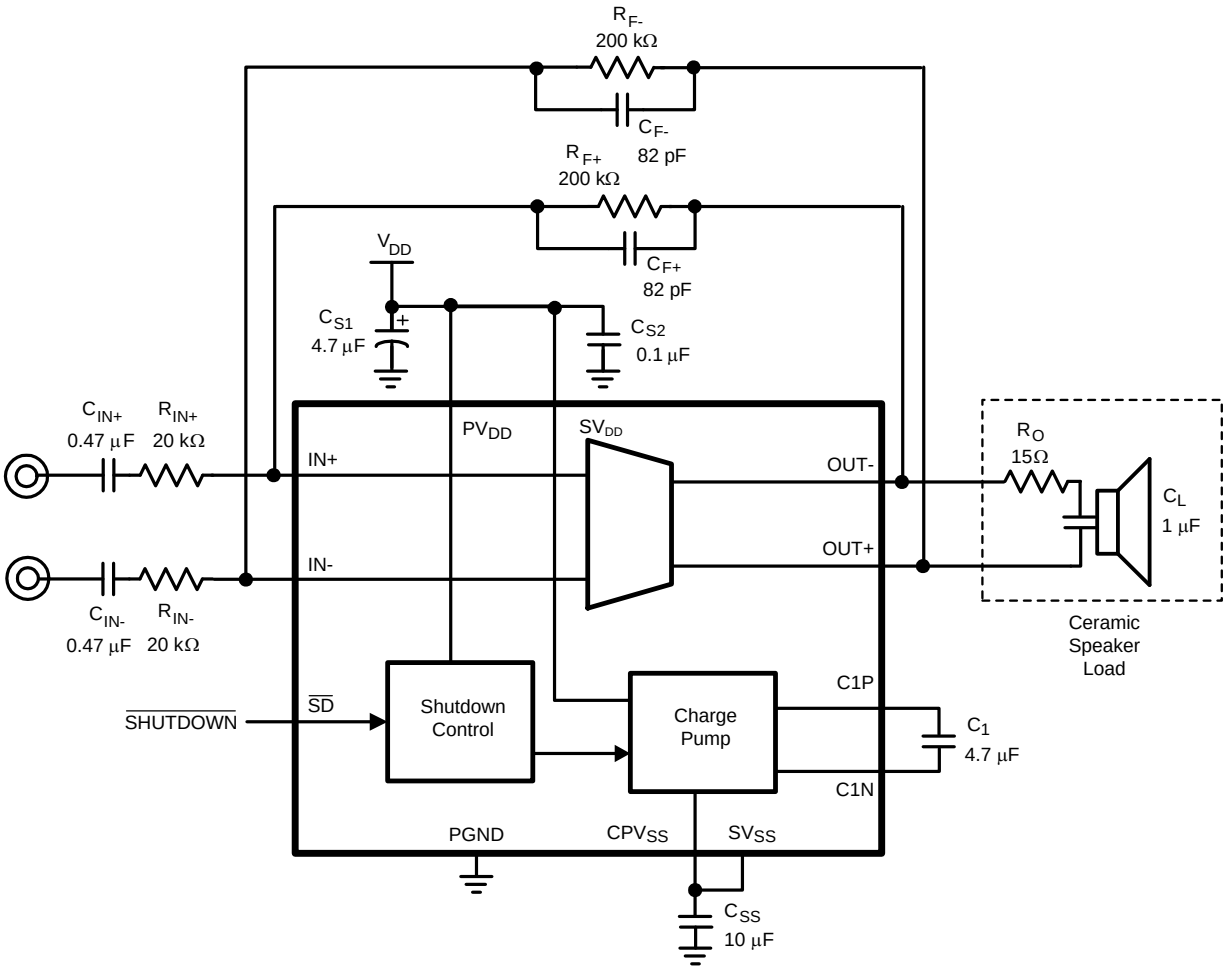

Figure 1. Typical Audio Amplifier Application Circuit

Connection Diagram

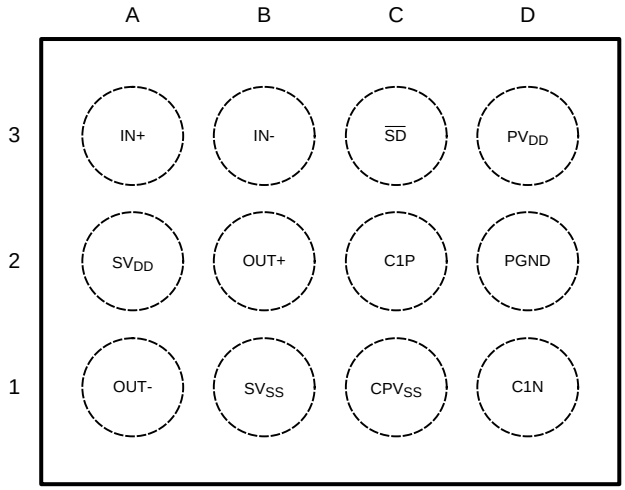

Figure 2. 12 Bump DSBGA - Top View
See Package Number YZR00121AA

Copyright © 2008–2013, Texas Instruments Incorporated

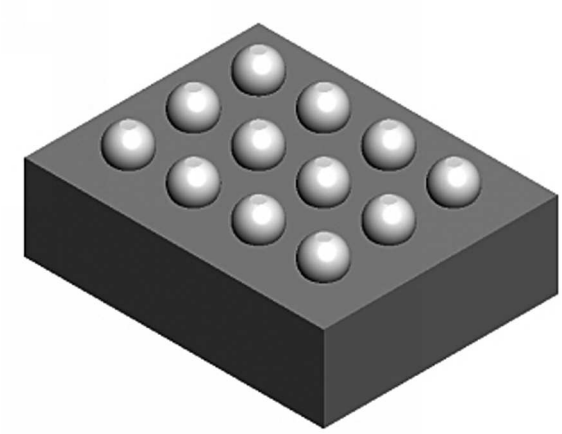

Figure 3. 12 Bump DSBGA - Package View

BUMP DESCRIPTIONS

Bump	Name	Description
A1	OUT-	Amplifier Inverting Output
A2	SV_{DD}	Signal Power Supply - Positive
A3	IN+	Amplifier Non-inverting Input
B1	SV_{SS}	Signal Power Supply - Negative
B2	OUT+	Amplifier Non-inverting Output
B3	IN-	Amplifier Inverting Input
C1	CPV_{SS}	Charge Pump Output Voltage
C2	C1P	Charge Pump Flying Capacitor Positive Terminal
C3	$\overline{SD}$	Active Low Reset Input. Connect to V_{DD} for normal operation. Drive $\overline{SD}$ low to disable.
D1	C1N	Charge Pump Flying Capacitor Negative Terminal
D2	PGND	Power Ground
D3	PV_{DD}	Power Supply

Copyright © 2008–2013, Texas Instruments Incorporated

These devices have limited built-in ESD protection. The leads should be shorted together or the device placed in conductive foam during storage or handling to prevent electrostatic damage to the MOS gates.

Absolute Maximum Ratings[1][2][3]

Supply Voltage (SV_{DD}, PV_{DD})[1]		5.25V
Storage Temperature		−65°C to +150°C
Input Voltage		−0.3V to V_{DD} + 0.3V
Power Dissipation[4]		Internally limited
ESD Rating[5]		2000V
ESD Rating[6]		200V
Junction Temperature		150°C
Thermal Resistance	θ_{JA} (YZR)	114°C/W
Soldering Information		See AN-1112 (SNVA009) Micro SMD Wafer Level Chip Scale

(1) *"Absolute Maximum Ratings"* indicate limits beyond which damage to the device may occur, including inoperability and degradation of device reliability and/or performance. Functional operation of the device and/or non-degradation at the *Absolute Maximum Ratings* or other conditions beyond those indicated in the *Recommended Operating Conditions* is not implied. The *Recommended Operating Conditions* indicate conditions at which the device is functional and the device should not be operated beyond such conditions. All voltages are measured with respect to the ground pin, unless otherwise specified.
(2) The *Electrical Characteristics* tables list ensured specifications under the listed *Recommended Operating Conditions* except as otherwise modified or specified by the *Electrical Characteristics Conditions* and/or Notes. Typical specifications are estimations only and are not ensured.
(3) If Military/Aerospace specified devices are required, please contact the TI Sales Office/ Distributors for availability and specifications.
(4) The maximum power dissipation must be derated at elevated temperatures and is dictated by T_{JMAX}, θ_{JA}, and the ambient temperature, T_A. The maximum allowable power dissipation is $P_{DMAX} = (T_{JMAX} - T_A) / \theta_{JA}$ or the number given in *Absolute Maximum Ratings*, whichever is lower.
(5) Human body model, applicable std. JESD22-A114C.
(6) Machine model, applicable std. JESD22-A115-A.

Operating Ratings

Temperature Range $T_{MIN} \le T_A \le T_{MAX}$	−40°C ≤ T_A ≤ +85°C
Supply Voltage (SV_{DD}, PV_{DD})	2.7V ≤ _V_{DD} ≤ 5.0V

Electrical Characteristics V_{DD} = 3.6V[1]

The following specifications apply for V_{DD} = 3.6V, $A_{V\text{-}BTL}$ = 20dB (R_F = 200kΩ, R_{IN} = 20kΩ), Z_L = 15Ω+1μF, unless otherwise specified. Limits apply for T_A = 25°C.

Symbol	Parameter	Conditions	LM48556		Units (Limits)
			Typical[2]	Limit[3]	
I_{DD}	Quiescent Power Supply Current	V_{IN} = 0V	4.8	7	mA (max)
I_{SD}	Shutdown Current	$V_{\overline{SD}}$ = GND (Note 8)	0.1	1	μA (max)
V_{OS}	Output Offset Voltage	C_{IN} = 0.47μF, A_V = 1V/V (0dB)	0.6	4	mV (max)
T_{WU}	Wake-up Time		0.5		ms
V_{OUT}	Output Voltage Swing	THD+N = 1% (max); f = 1kHz	14.2		V_{PP}
		THD+N = 1% (max); f = 10kHz	11.5	11	V_{PP} (min)
THD+N	Total Harmonic Distortion + Noise	V_{OUT} = 11V_{PP}, f = 1kHz			
		A_V = 0dB	0.005		%
		A_V = 20dB	0.03		%
ε_{OS}	Output Noise	A-weighted filter, V_{IN} = 0V Input referred	8		μV
PSRR	Power Supply Rejection Ratio	V_{RIPPLE} = 200mV_{PP}, f = 217Hz	80	60	dB (min)

(1) The *Electrical Characteristics* tables list ensured specifications under the listed *Recommended Operating Conditions* except as otherwise modified or specified by the *Electrical Characteristics Conditions* and/or Notes. Typical specifications are estimations only and are not ensured.
(2) Typical values represent most likely parametric norms at T_A = +25ºC, and at the *Recommended Operation Conditions* at the time of product characterization and are not ensured.
(3) Datasheet min/max specification limits are specified by test or statistical analysis.

Copyright © 2008–2013, Texas Instruments Incorporated

Electrical Characteristics V_{DD} = 3.6V(1) (continued)

The following specifications apply for V_{DD} = 3.6V, $A_{V\text{-}BTL}$ = 20dB (R_F = 200kΩ, R_{IN} = 20kΩ), Z_L = 15Ω+1μF, unless otherwise specified. Limits apply for T_A = 25°C.

Symbol	Parameter	Conditions	LM48556		Units (Limits)
			Typical(2)	Limit(3)	
CMRR	Common Mode Rejection Ratio	Input Referred	70	60	dB (min)
V_{LH}	Logic High Threshold Voltage			1.2	V (min)
V_{LL}	Logic Low Threshold Voltage			0.45	V (max)

Electrical Characteristics V_{DD} = 4.5V(1)

The following specifications apply for V_{DD} = 4.5V, $A_{V\text{-}BTL}$ = 20dB (R_F = 200kΩ, R_{IN} = 20kΩ), Z_L = 15Ω+1μF, unless otherwise specified. Limits apply for T_A = 25°C.

Symbol	Parameter	Conditions	LM48556		Units (Limits)
			Typical(2)	Limit(3)	
I_{DD}	Quiescent Power Supply Current	V_{IN} = 0V	6.5	10	mA (max)
I_{SD}	Shutdown Current	$V_{\overline{SD}}$ = GND (Note 8)	0.1	1	μA (max)
V_{OS}	Output Offset Voltage	C_{IN} = 0.47μF, A_V = 1V/V (0dB)	0.6	4	mV (max)
T_{WU}	Wake-up Time		0.5		ms (max)
V_{OUT}	Output Voltage Swing	THD+N = 1% (max); f = 1kHz	17.5		V_{PP}
		THD+N = 1% (max); f = 10kHz	14.6	14	V_{PP} (min)
THD+N	Total Harmonic Distortion + Noise	V_{OUT} = 14V_{PP}, f = 1kHz			
		A_V = 0dB	0.005		%
		A_V = 20dB	0.03		%
ε_{OS}	Output Noise	A-weighted filter, V_{IN} = 0V Input referred	8		μV
PSRR	Power Supply Rejection Ratio	V_{RIPPLE} = 200mV_{PP}, f = 217Hz,	80	60	dB (min)
CMRR	Common Mode Rejection Ratio	Input Referred	70	60	dB (min)
V_{LH}	Logic High Threshold Voltage			1.2	V (min)
V_{LL}	Logic Low Threshold Voltage			0.45	V (max)

(1) The *Electrical Characteristics* tables list ensured specifications under the listed *Recommended Operating Conditions* except as otherwise modified or specified by the *Electrical Characteristics Conditions* and/or Notes. Typical specifications are estimations only and are not ensured.
(2) Typical values represent most likely parametric norms at T_A = +25ºC, and at the *Recommended Operation Conditions* at the time of product characterization and are not ensured.
(3) Datasheet min/max specification limits are specified by test or statistical analysis.

Copyright © 2008–2013, Texas Instruments Incorporated

Typical Performance Characteristics

(Z_L = 15Ω+1μF, A_V = 20dB, BW = 22kHz)

THD+N vs Frequency
V_{DD} = 2.7V, V_O = 8V_{PP}

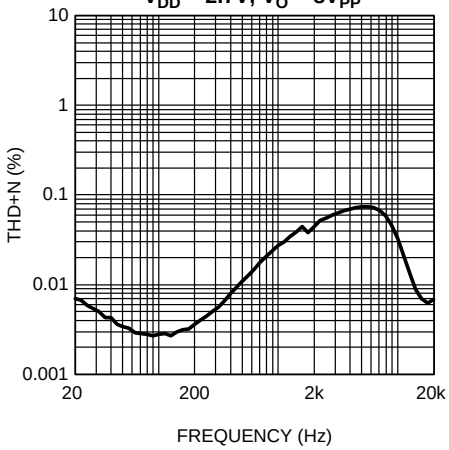

Figure 4.

THD+N vs Frequency
V_{DD} = 3.6V, V_O = 14.2V_{PP}

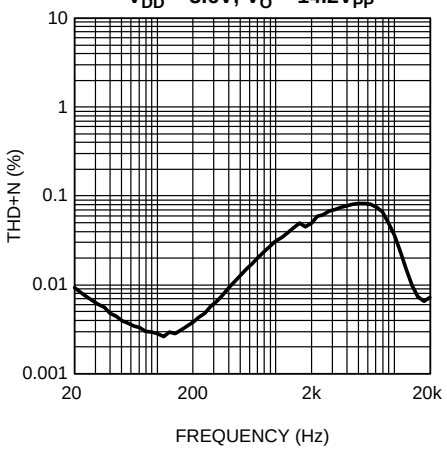

Figure 5.

THD+N vs Frequency
V_{DD} = 4.5V, V_O = 17.5V_{PP}

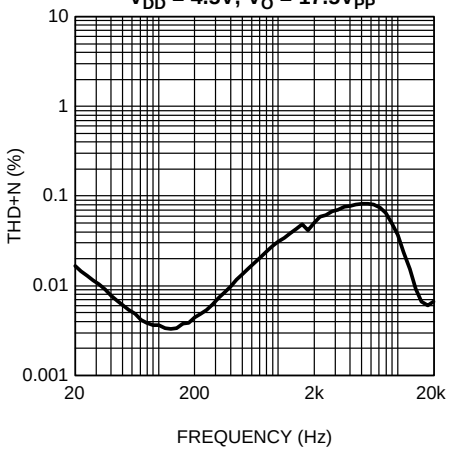

Figure 6.

THD+N vs Output Voltage Swing
V_{DD} = 2.7V, f = 1kHz

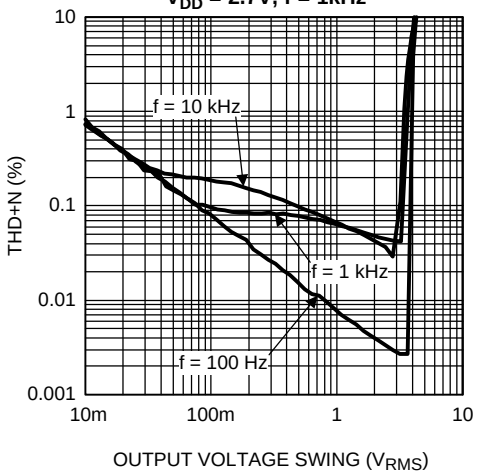

Figure 7.

THD+N vs Output Voltage Swing
V_{DD} = 3.6V, f = 1kHz

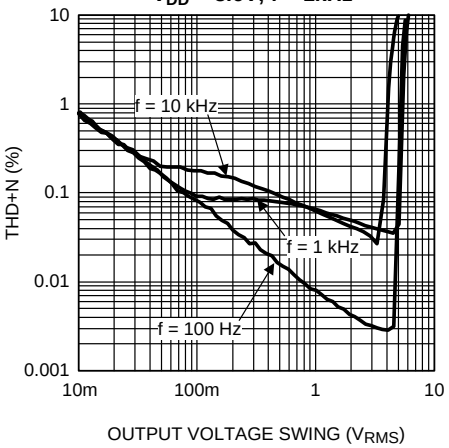

Figure 8.

THD+N vs Output Voltage Swing
V_{DD} = 4.5V, f = 1kHz

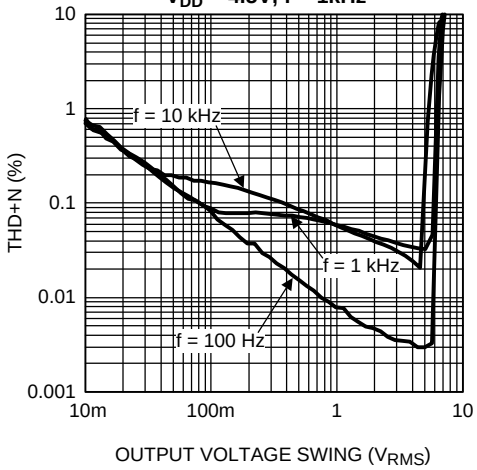

Figure 9.

Copyright © 2008–2013, Texas Instruments Incorporated

Typical Performance Characteristics (continued)

(Z_L = 15Ω+1μF, A_V = 20dB, BW = 22kHz)

CMRR vs Frequency
V_{DD} = 2.7V, Input referred

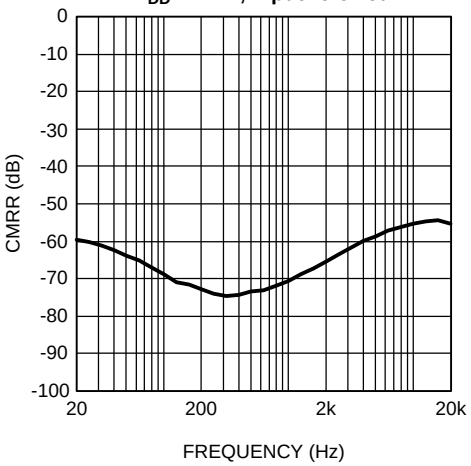

Figure 10.

CMRR vs Frequency
V_{DD} = 3.6V, Input referred

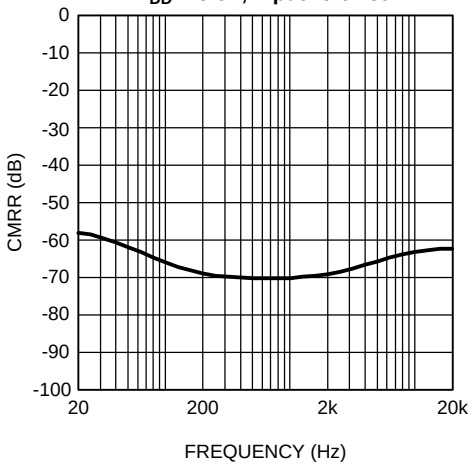

Figure 11.

CMRR vs Frequency
V_{DD} = 4.5V, Input referred

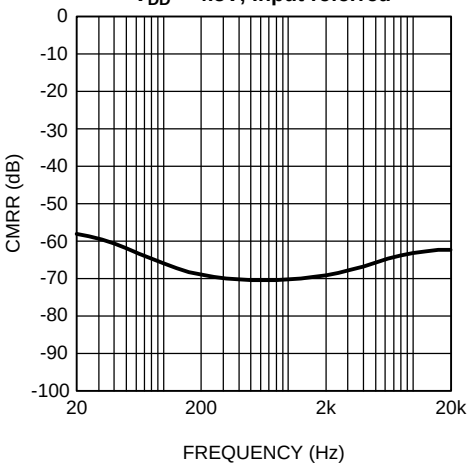

Figure 12.

PSRR vs Frequency
V_{DD} = 2.7V, Input referred

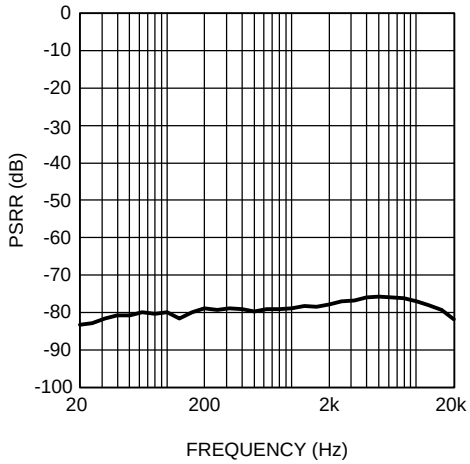

Figure 13.

PSRR vs Frequency
V_{DD} = 3.6V, Input referred

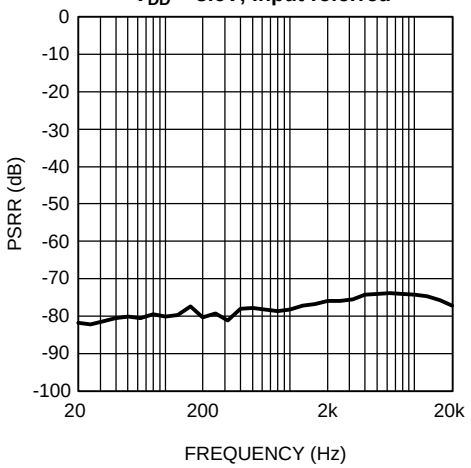

Figure 14.

PSRR vs Frequency
V_{DD} = 4.5V, Input referred

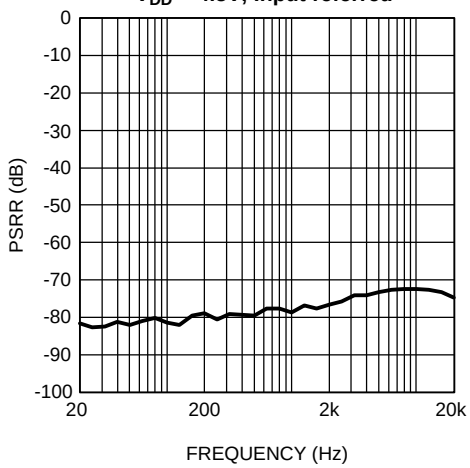

Figure 15.

Copyright © 2008–2013, Texas Instruments Incorporated

Typical Performance Characteristics (continued)

(Z_L = 15Ω+1μF, A_V = 20dB, BW = 22kHz)

Output Voltage vs Frequency
V_{DD} = 2.7V, THD+N = 1%

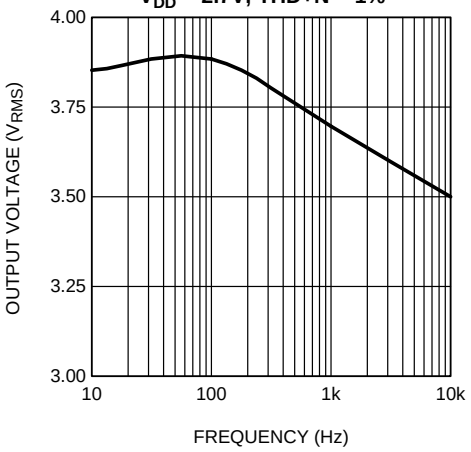

Figure 16.

Output Voltage vs Frequency
V_{DD} = 3.6V, THD+N = 1%

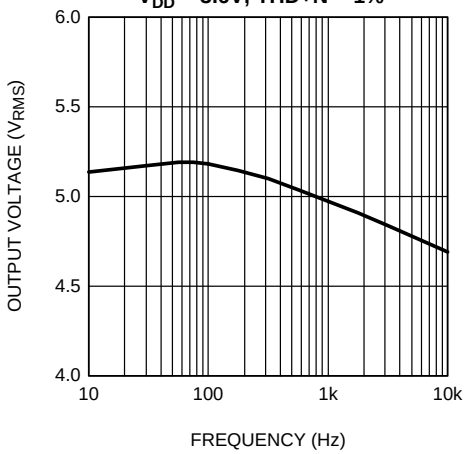

Figure 17.

Output Voltage vs Frequency
V_{DD} = 4.5V, THD+N = 1%

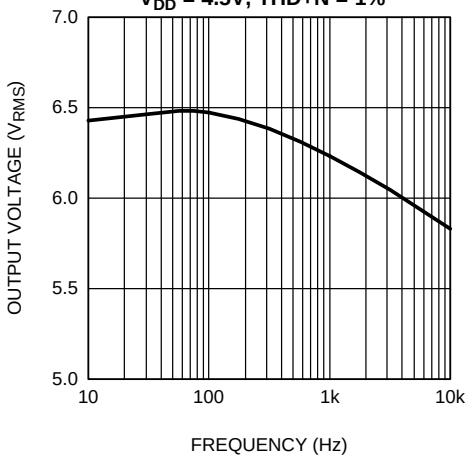

Figure 18.

Supply Current vs Supply Voltage
V_{IN} = GND, No Load

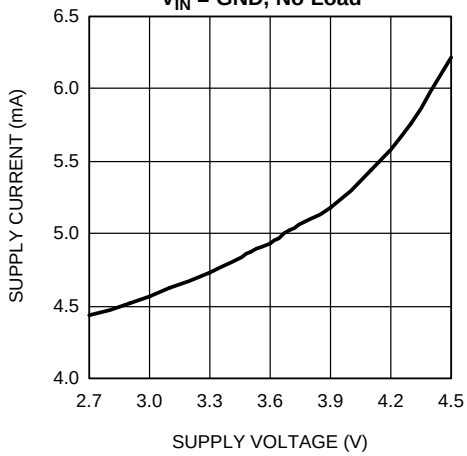

Figure 19.

Power Consumption vs Output Voltage Swing
V_{DD} = 2.7V, THD+N ≤ 1%

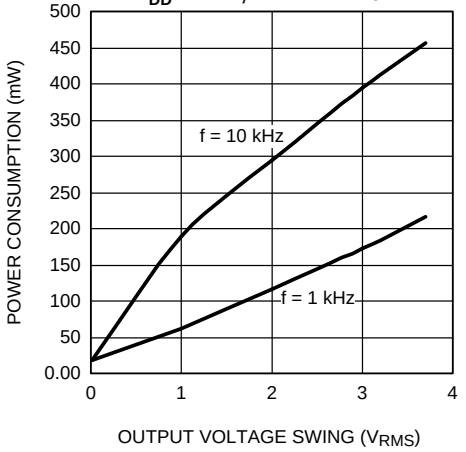

Figure 20.

Power Consumption vs Output Voltage Swing
V_{DD} = 3.6V, THD+N ≤ 1%

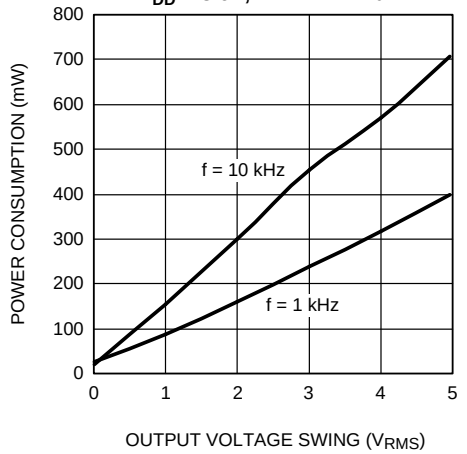

Figure 21.

Copyright © 2008–2013, Texas Instruments Incorporated

Typical Performance Characteristics (continued)

(Z_L = 15Ω+1μF, A_V = 20dB, BW = 22kHz)

Power Consumption vs Output Voltage Swing
V_{DD} = 4.5V, THD+N ≤ 1%

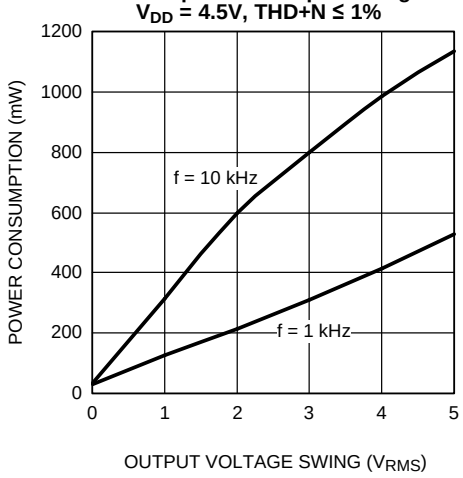

Figure 22.

APPLICATION INFORMATION

GENERAL AMPLIFIER FUNCTION

The LM48556 is a fully differential ceramic speaker driver that utilizes TI's inverting charge pump technology to deliver the high drive voltages required by ceramic speakers, without the need for noisy, board-space consuming inductive based regulators. The low-noise, inverting charge pump creates a negative supply (CPV_{SS}) from the positive supply (PV_{DD}). Because the amplifiers operate from these bipolar supplies, the maximum output voltage swing for each amplifier is doubled compared to a traditional single supply device. Additionally, the LM48556 is configured as a bridge-tied load (BTL) device, quadrupling the maximum theoretical output voltage range when compared to a single supply, single-ended output amplifier, see Bridge Configuration Explained section. The charge pump and BTL configuration allow the LM48556 to deliver over $17V_{P-P}$ at 1kHz to a 1µF ceramic speaker while operating from a single 4.5V supply .

DIFFERENTIAL AMPLIFIER EXPLANATION

The LM48556 features a differential input stage, which offers improved noise rejection compared to a single-ended input amplifier. Because a differential input amplifier amplifies the difference between the two input signals, any component common to both signals is cancelled. An additional benefit of the differential input structure is the possible elimination of the DC input blocking capacitors. Since the DC component is common to both inputs, and thus cancelled by the amplifier, the LM48556 can be used without input coupling capacitors when configured with a differential input signal.

BRIDGE CONFIGURATION EXPLAINED

The LM48556 is designed to drive a load differentially, a configuration commonly referred to as a bridge-tied load (BTL). The BTL configuration differs from the single-ended configuration, where one side of the load is connected to ground. A BTL amplifier offers advantages over a single-ended device. Driving the load differentially doubles the output voltage compared to a single-ended amplifier under similar conditions. Any component common to both outputs is cancelled, thus there is no net DC voltage across the load, eliminating the DC blocking capacitors required by single-ended, single-supply amplifiers.

SHUTDOWN FUNCTION

The LM48556 features a low current shutdown mode. Set $\overline{SD}$ = GND to disable the amplifier and reduce supply current to 0.1µA. Switch $\overline{SD}$ between V_{DD} and GND for minimum current consumption in shutdown. The LM48556 may be disabled with shutdown voltages less than 0.45V, however, the idle current will be greater than the typical 0.1µA value.

PROPER SELECTION OF EXTERNAL COMPONENTS

Power Supply Bypassing/Filtering

Proper power supply bypassing is critical for low noise performance and high PSRR. Place the supply bypass capacitors as close to the device as possible. Place a 4.7µF tantalum capacitor in parallel with a 0.1µF ceramic capacitor from V_{DD} to GND. Additional bulk capacitance may be added as required.

Charge Pump Capacitor Selection

Use low ESR ceramic capacitors (less than 100mΩ) for optimum performance.

Charge Pump Flying Capacitor (C1)

The flying capacitor (C1) affects the load regulation and output impedance of the charge pump. A C1 value that is too low results in a loss of current drive, leading to a loss of amplifier headroom. A higher valued C1 improves load regulation and lowers charge pump output impedance to an extent. Above 4.7µF, the $R_{DS(ON)}$ of the charge pump switches and the ESR of C1 and C_{SS} dominate the output impedance. A lower value capacitor can be used in systems with low maximum output power requirements.

Copyright © 2008–2013, Texas Instruments Incorporated

Charge Pump Hold Capacitor (C_{SS})

The value and ESR of the hold capacitor (C_{SS}) directly affects the ripple on CPV_{SS}. Increasing the value of C_{SS} reduces output ripple. Decreasing the ESR of C_{SS} reduces both output ripple and charge pump output impedance. A lower value capacitor can be used in systems with low maximum output power requirements.

Gain Setting Resistor Selection

The amplifier gain of the LM48556 is set by four external resistors, two per each input, $R_{IN_}$ and $R_{F_}$ Figure 1. The amplifier gain is given by Equation 1:

$$A_V = R_F / R_{IN} \quad (V/V) \tag{1}$$

Careful matching of the resistor pairs, R_{F+} and R_{F-}, and R_{IN+} and R_{IN-}, is required for optimum performance. Any mismatch between the resistors results in a differential gain error that leads to an increase in THD+N, decrease in PSRR and CMRR, as well as an increase in output offset voltage. Resistors with a tolerance of 1% or better are recommended.

The gain setting resistors should be placed as close to the device as possible. Keeping the input traces close together and of the same length increases noise rejection in noisy environments. Noise coupled onto the input traces which are physically close to each other will be common mode and easily rejected.

Feedback Capacitor Selection

Due to their capacitive nature, ceramic speakers poorly reproduce high frequency audio content. At high frequencies, a ceramic speaker presents a low impedance load to the amplifier, increasing the required drive current. The higher output current can drive the device into clipping, increasing THD+N. Low-pass filtering the audio signal improves audio quality by decreasing the signal amplitude at high frequencies, reducing the speaker drive current. Adding a capacitor in parallel with each feedback resistor creates a simple low-pass filter with the -3dB point determined by Equation 2:

$$f_{-3dB} = 1 / 2\pi R_F C_F \quad (Hz)$$

Where

- R_F is the value of the feedback resistor determined by Equation 1 in the Gain Setting Resistor Selection section
- C_F is the value of the feedback capacitor (2)

The feedback capacitor is optional and not required for normal operation.

Input Capacitor Selection

Input capacitors block the DC component of the audio signal, eliminating any conflict between the DC component of the audio source and the bias voltage of the LM48556. The input capacitors create a high-pass filter with the input resistors R_{IN}. The -3dB point of the high pass filter is found using Equation 3 below.

$$f = 1 / 2\pi R_{IN} C_{IN} \quad (Hz)$$

Where

- the value of R_{IN} is determined by Equation 1 in the Gain Setting Resistor Selection section (3)

When the LM48556 is using a single-ended source, power supply noise on the ground is seen as an input signal. Setting the high-pass filter point above the power supply noise frequencies, 217Hz in a GSM phone, for example, filters out the noise such that it is not amplified and heard on the output. Capacitors with a tolerance of 1% or better are recommended for impedance matching and improved CMRR and PSRR.

SINGLE-ENDED AUDIO AMPLIFIER CONFIGURATION

The LM48556 is compatible with single-ended sources. Figure 4 shows the typical single-ended applications circuit.

Copyright © 2008–2013, Texas Instruments Incorporated

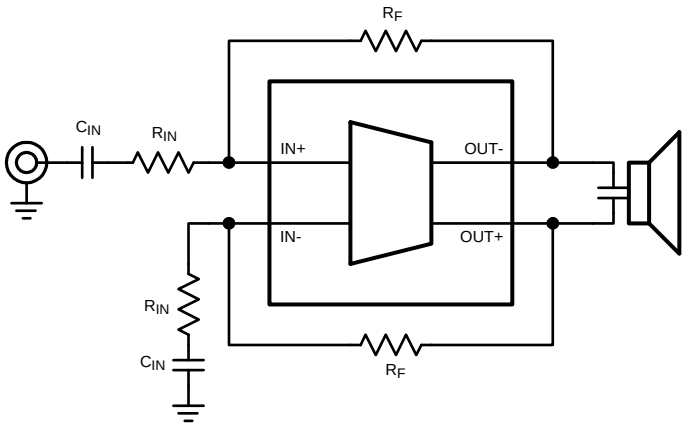

Figure 23. Single-Ended Input Configuration

Bill Of Materials

Component	Description	Designator	Footprint	Quantity
LM48556TL	LM48556TL	LM48556TL	LM48556TL	1
Capacitor	4.7µF, ceramic, low ESR (<0.1Ω) 16V, -40°C to +85°C	C1	CR3216-1206	1
Capacitor	82µF, 16V, -40°C to +85°C	C_{F+}	CR2012-0805	1
Capacitor	82µF, 16V, -40°C to +85°C	C_{F-}	CR2012-0805	1
Capacitor	0.47µF, 16V, -40°C to +85°	C_{IN+}	CR2012-0805	1
Capacitor	0.47µF, 16V, -40°C to +85°C	C_{IN-}	CR2012-0805	1
Capacitor	4.7µF, 16V, -40°C to +85°C	C_{S1}	CR3216-1206	1
Capacitor	0.1µF ceramic, 16V, -40°C to +85°C	C_{S2}	CR2012-0805	1
Capacitor	10µF ceramic, low ESR (<0.1Ω) 16V, -40°C to +85°C	C_{SS}	CR3216-1206	1
Header, 2–Pin	Header 2	IN	HDR1X2	1
Resistor	200kΩ	R_{F+}	CR2012-0805	1
Resistor	200kΩ	R_{F+}	CR2012-0805	1
Resistor	200kΩ	R_{IN+}	CR2012-0805	1
Resistor	200kΩ	R_{IN-}	CR2012-0805	1
Header, 2–Pin	Header 2	SPEAKER	HDR1X2	1
Header, 2–Pin	Header 2	V_{DD}	HDR1X2	1
Header, 3–Pin	3–pole jumper	J1	3–pole jumper	1

Copyright © 2008–2013, Texas Instruments Incorporated

Demonstration Board Schematic

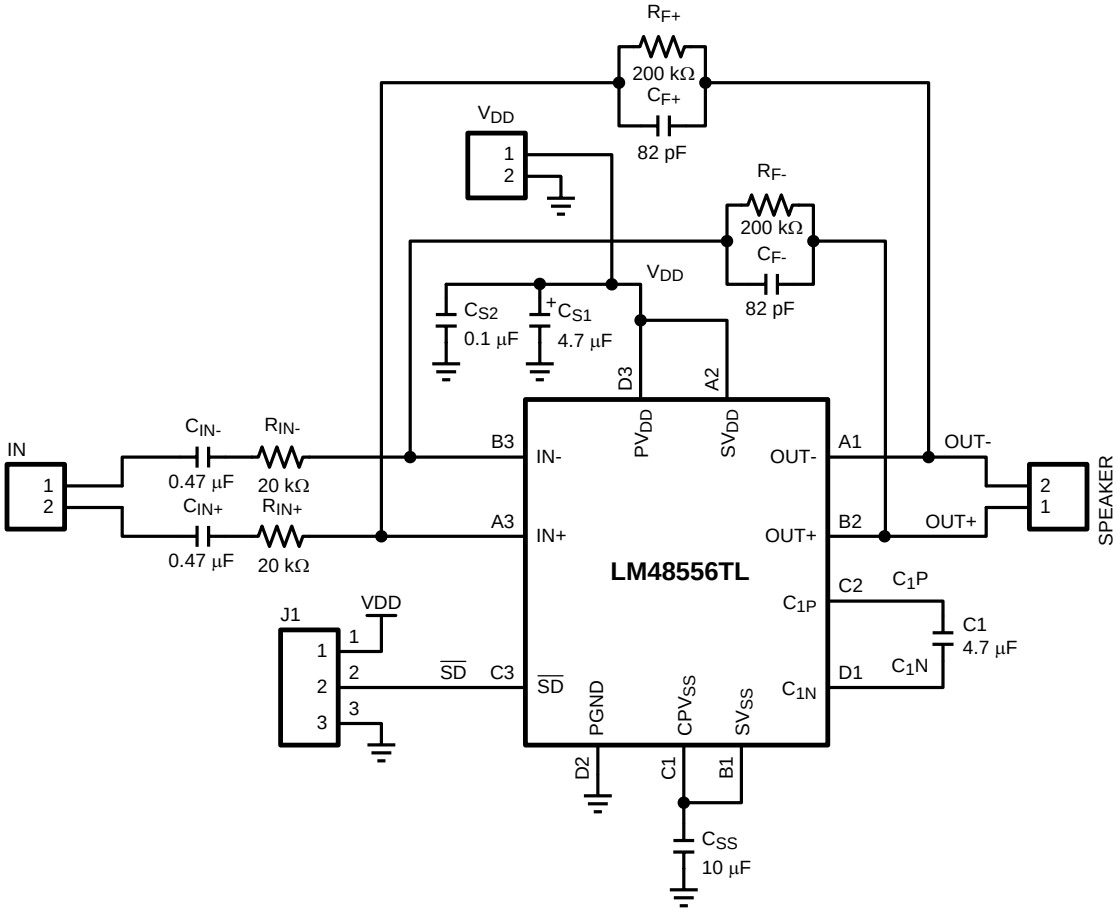

Demonstration Board PCB Views

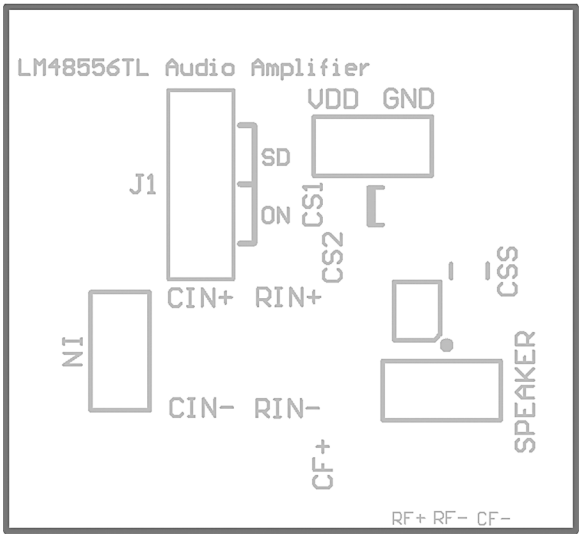

Figure 24. Top Overlay

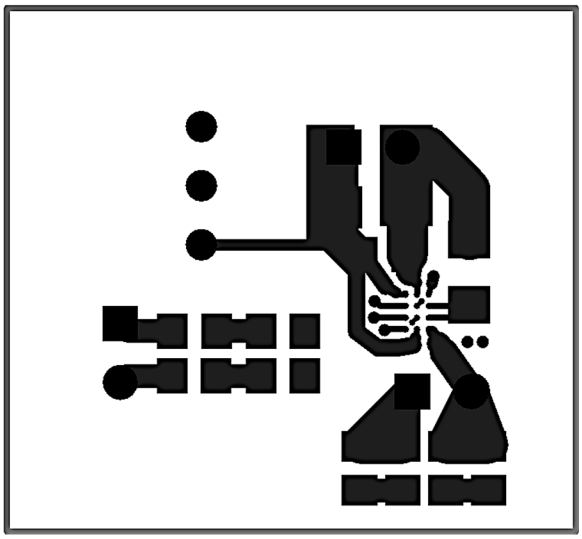

Figure 25. Top Layer

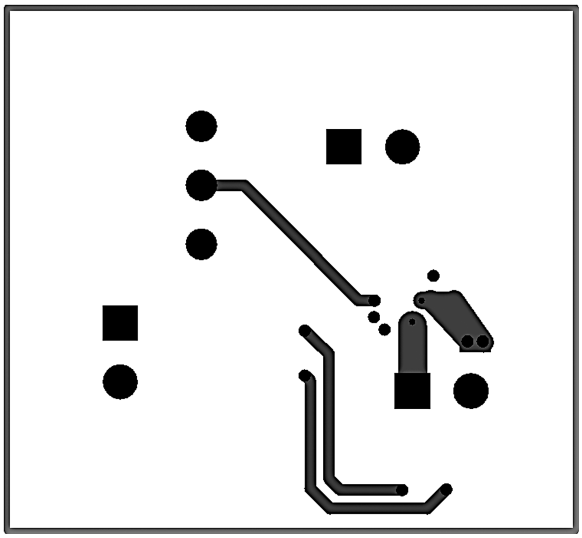

Figure 26. Mid Layer 1

Copyright © 2008–2013, Texas Instruments Incorporated

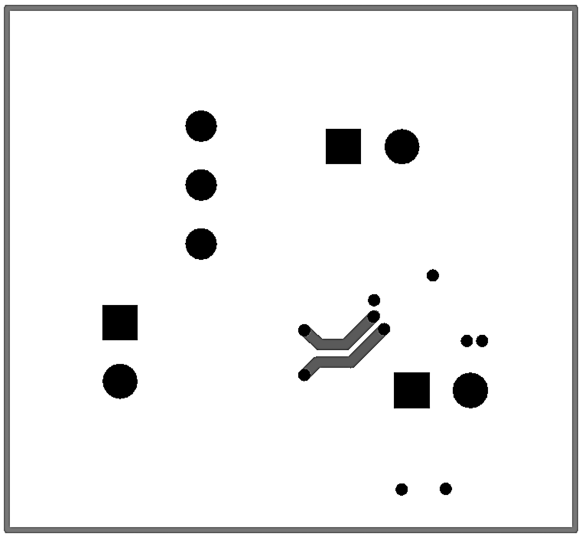

Figure 27. Mid Layer 2

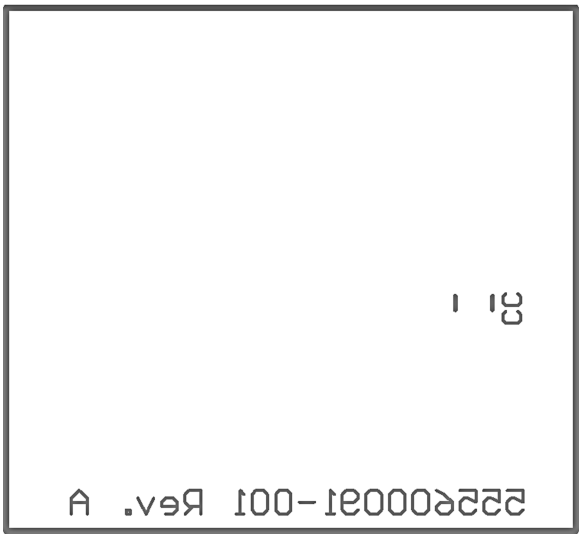

Figure 28. Bottom Overlay

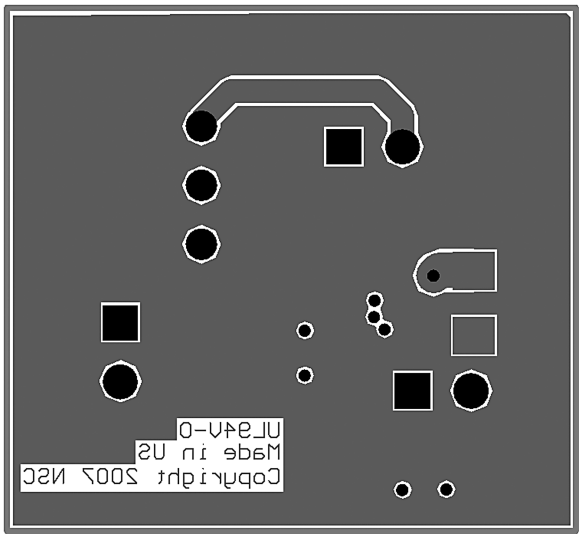

Figure 29. Bottom Layer

Copyright © 2008–2013, Texas Instruments Incorporated

REVISION HISTORY

Rev	Date	Description
1.0	06/03/08	Initial release.
1.01	12/09/08	Changed Power Supply Voltage Limits from 4.5V to 5.0V.
B	05/02/2013	Changed layout of National Data Sheet to TI format

Copyright © 2008–2013, Texas Instruments Incorporated

PACKAGING INFORMATION

Orderable Device	Status (1)	Package Type	Package Drawing	Pins	Package Qty	Eco Plan (2)	Lead/Ball Finish	MSL Peak Temp (3)	Op Temp (°C)	Top-Side Markings (4)	Samples
LM48556TL/NOPB	ACTIVE	DSBGA	YZR	12	250	Green (RoHS & no Sb/Br)	SNAGCU	Level-1-260C-UNLIM		GK4	Samples
LM48556TLX/NOPB	ACTIVE	DSBGA	YZR	12	3000	Green (RoHS & no Sb/Br)	SNAGCU	Level-1-260C-UNLIM		GK4	Samples

(1) The marketing status values are defined as follows:
ACTIVE: Product device recommended for new designs.
LIFEBUY: TI has announced that the device will be discontinued, and a lifetime-buy period is in effect.
NRND: Not recommended for new designs. Device is in production to support existing customers, but TI does not recommend using this part in a new design.
PREVIEW: Device has been announced but is not in production. Samples may or may not be available.
OBSOLETE: TI has discontinued the production of the device.

(2) Eco Plan - The planned eco-friendly classification: Pb-Free (RoHS), Pb-Free (RoHS Exempt), or Green (RoHS & no Sb/Br) - please check http://www.ti.com/productcontent for the latest availability information and additional product content details.
TBD: The Pb-Free/Green conversion plan has not been defined.
Pb-Free (RoHS): TI's terms "Lead-Free" or "Pb-Free" mean semiconductor products that are compatible with the current RoHS requirements for all 6 substances, including the requirement that lead not exceed 0.1% by weight in homogeneous materials. Where designed to be soldered at high temperatures, TI Pb-Free products are suitable for use in specified lead-free processes.
Pb-Free (RoHS Exempt): This component has a RoHS exemption for either 1) lead-based flip-chip solder bumps used between the die and package, or 2) lead-based die adhesive used between the die and leadframe. The component is otherwise considered Pb-Free (RoHS compatible) as defined above.
Green (RoHS & no Sb/Br): TI defines "Green" to mean Pb-Free (RoHS compatible), and free of Bromine (Br) and Antimony (Sb) based flame retardants (Br or Sb do not exceed 0.1% by weight in homogeneous material)

(3) MSL, Peak Temp. -- The Moisture Sensitivity Level rating according to the JEDEC industry standard classifications, and peak solder temperature.

(4) Multiple Top-Side Markings will be inside parentheses. Only one Top-Side Marking contained in parentheses and separated by a "~" will appear on a device. If a line is indented then it is a continuation of the previous line and the two combined represent the entire Top-Side Marking for that device.

Important Information and Disclaimer: The information provided on this page represents TI's knowledge and belief as of the date that it is provided. TI bases its knowledge and belief on information provided by third parties, and makes no representation or warranty as to the accuracy of such information. Efforts are underway to better integrate information from third parties. TI has taken and continues to take reasonable steps to provide representative and accurate information but may not have conducted destructive testing or chemical analysis on incoming materials and chemicals. TI and TI suppliers consider certain information to be proprietary, and thus CAS numbers and other limited information may not be available for release.

In no event shall TI's liability arising out of such information exceed the total purchase price of the TI part(s) at issue in this document sold by TI to Customer on an annual basis.

TAPE AND REEL INFORMATION

REEL DIMENSIONS

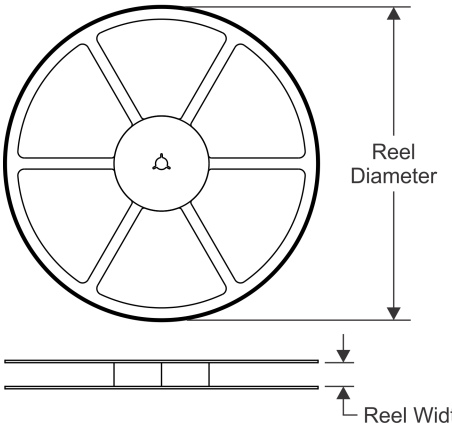

TAPE DIMENSIONS

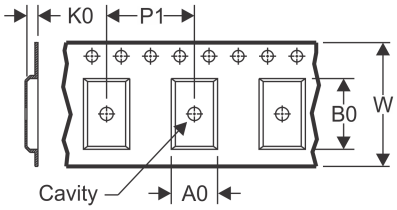

A0	Dimension designed to accommodate the component width
B0	Dimension designed to accommodate the component length
K0	Dimension designed to accommodate the component thickness
W	Overall width of the carrier tape
P1	Pitch between successive cavity centers

QUADRANT ASSIGNMENTS FOR PIN 1 ORIENTATION IN TAPE

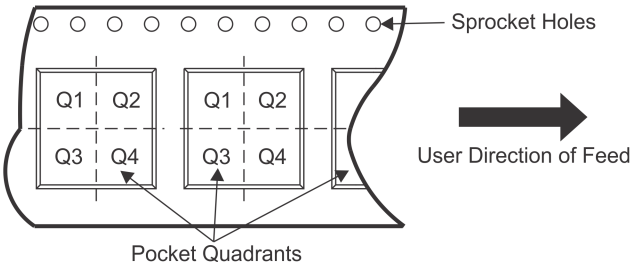

*All dimensions are nominal

Device	Package Type	Package Drawing	Pins	SPQ	Reel Diameter (mm)	Reel Width W1 (mm)	A0 (mm)	B0 (mm)	K0 (mm)	P1 (mm)	W (mm)	Pin1 Quadrant
LM48556TL/NOPB	DSBGA	YZR	12	250	178.0	8.4	1.68	2.13	0.76	4.0	8.0	Q1
LM48556TLX/NOPB	DSBGA	YZR	12	3000	178.0	8.4	1.68	2.13	0.76	4.0	8.0	Q1

TAPE AND REEL BOX DIMENSIONS

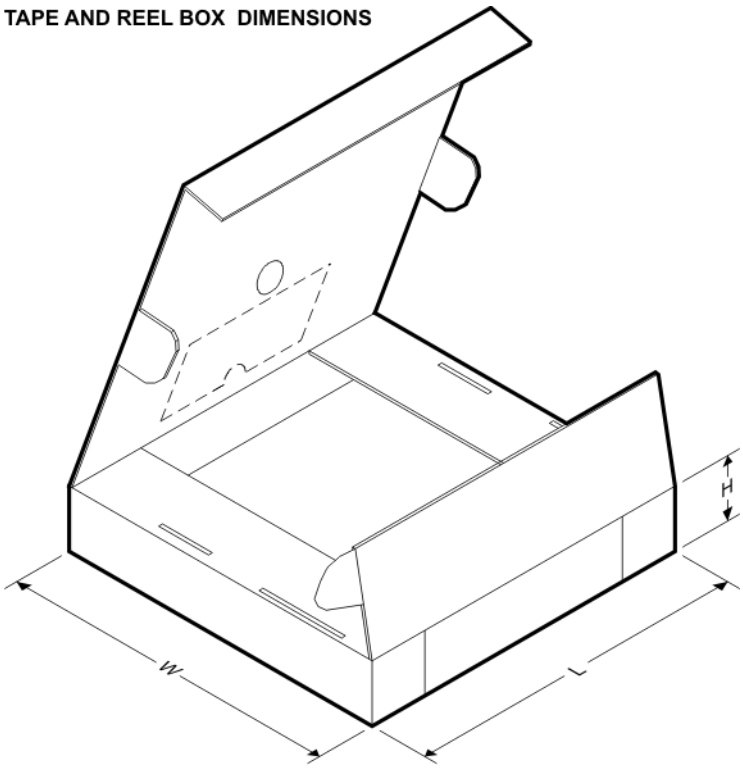

*All dimensions are nominal

Device	Package Type	Package Drawing	Pins	SPQ	Length (mm)	Width (mm)	Height (mm)
LM48556TL/NOPB	DSBGA	YZR	12	250	210.0	185.0	35.0
LM48556TLX/NOPB	DSBGA	YZR	12	3000	210.0	185.0	35.0

YZR0012

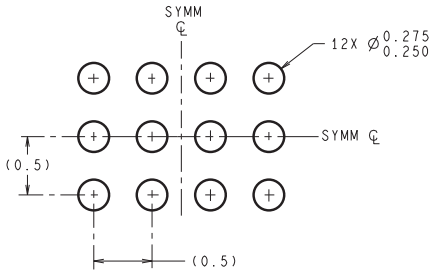

DIMENSIONS ARE IN MILLIMETERS
DIMENSIONS IN ( ) FOR REFERENCE ONLY

LAND PATTERN RECOMMENDATION

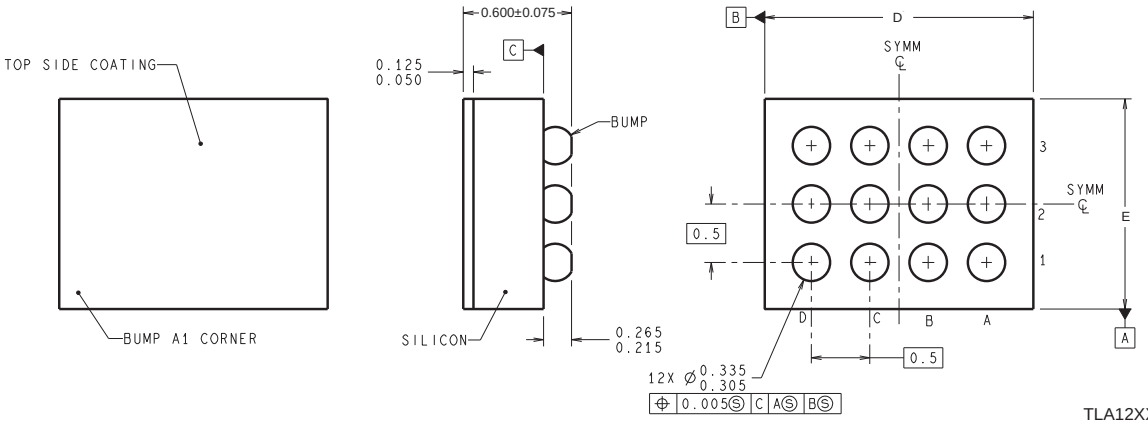

TLA12XXX (Rev C)

D: Max = 2.012 mm, Min =1.951 mm

E: Max = 1.512 mm, Min =1.452 mm

4215049/A 12/12

NOTES: A. All linear dimensions are in millimeters. Dimensioning and tolerancing per ASME Y14.5M-1994.
B. This drawing is subject to change without notice.

IMPORTANT NOTICE

Texas Instruments Incorporated (TI) reserves the right to make corrections, enhancements, improvements and other changes to its semiconductor products and services per JESD46, latest issue, and to discontinue any product or service per JESD48, latest issue. Buyers should obtain the latest relevant information before placing orders and should verify that such information is current and complete.

TI's published terms of sale for semiconductor products (http://www.ti.com/sc/docs/stdterms.htm) apply to the sale of packaged integrated circuit products that TI has qualified and released to market. Additional terms may apply to the use or sale of other types of TI products and services.

Reproduction of significant portions of TI information in TI data sheets is permissible only if reproduction is without alteration and is accompanied by all associated warranties, conditions, limitations, and notices. TI is not responsible or liable for such reproduced documentation. Information of third parties may be subject to additional restrictions. Resale of TI products or services with statements different from or beyond the parameters stated by TI for that product or service voids all express and any implied warranties for the associated TI product or service and is an unfair and deceptive business practice. TI is not responsible or liable for any such statements.

Buyers and others who are developing systems that incorporate TI products (collectively, "Designers") understand and agree that Designers remain responsible for using their independent analysis, evaluation and judgment in designing their applications and that Designers have full and exclusive responsibility to assure the safety of Designers' applications and compliance of their applications (and of all TI products used in or for Designers' applications) with all applicable regulations, laws and other applicable requirements. Designer represents that, with respect to their applications, Designer has all the necessary expertise to create and implement safeguards that (1) anticipate dangerous consequences of failures, (2) monitor failures and their consequences, and (3) lessen the likelihood of failures that might cause harm and take appropriate actions. Designer agrees that prior to using or distributing any applications that include TI products, Designer will thoroughly test such applications and the functionality of such TI products as used in such applications.

TI's provision of technical, application or other design advice, quality characterization, reliability data or other services or information, including, but not limited to, reference designs and materials relating to evaluation modules, (collectively, "TI Resources") are intended to assist designers who are developing applications that incorporate TI products; by downloading, accessing or using TI Resources in any way, Designer (individually or, if Designer is acting on behalf of a company, Designer's company) agrees to use any particular TI Resource solely for this purpose and subject to the terms of this Notice.

TI's provision of TI Resources does not expand or otherwise alter TI's applicable published warranties or warranty disclaimers for TI products, and no additional obligations or liabilities arise from TI providing such TI Resources. TI reserves the right to make corrections, enhancements, improvements and other changes to its TI Resources. TI has not conducted any testing other than that specifically described in the published documentation for a particular TI Resource.

Designer is authorized to use, copy and modify any individual TI Resource only in connection with the development of applications that include the TI product(s) identified in such TI Resource. NO OTHER LICENSE, EXPRESS OR IMPLIED, BY ESTOPPEL OR OTHERWISE TO ANY OTHER TI INTELLECTUAL PROPERTY RIGHT, AND NO LICENSE TO ANY TECHNOLOGY OR INTELLECTUAL PROPERTY RIGHT OF TI OR ANY THIRD PARTY IS GRANTED HEREIN, including but not limited to any patent right, copyright, mask work right, or other intellectual property right relating to any combination, machine, or process in which TI products or services are used. Information regarding or referencing third-party products or services does not constitute a license to use such products or services, or a warranty or endorsement thereof. Use of TI Resources may require a license from a third party under the patents or other intellectual property of the third party, or a license from TI under the patents or other intellectual property of TI.

TI RESOURCES ARE PROVIDED "AS IS" AND WITH ALL FAULTS. TI DISCLAIMS ALL OTHER WARRANTIES OR REPRESENTATIONS, EXPRESS OR IMPLIED, REGARDING RESOURCES OR USE THEREOF, INCLUDING BUT NOT LIMITED TO ACCURACY OR COMPLETENESS, TITLE, ANY EPIDEMIC FAILURE WARRANTY AND ANY IMPLIED WARRANTIES OF MERCHANTABILITY, FITNESS FOR A PARTICULAR PURPOSE, AND NON-INFRINGEMENT OF ANY THIRD PARTY INTELLECTUAL PROPERTY RIGHTS. TI SHALL NOT BE LIABLE FOR AND SHALL NOT DEFEND OR INDEMNIFY DESIGNER AGAINST ANY CLAIM, INCLUDING BUT NOT LIMITED TO ANY INFRINGEMENT CLAIM THAT RELATES TO OR IS BASED ON ANY COMBINATION OF PRODUCTS EVEN IF DESCRIBED IN TI RESOURCES OR OTHERWISE. IN NO EVENT SHALL TI BE LIABLE FOR ANY ACTUAL, DIRECT, SPECIAL, COLLATERAL, INDIRECT, PUNITIVE, INCIDENTAL, CONSEQUENTIAL OR EXEMPLARY DAMAGES IN CONNECTION WITH OR ARISING OUT OF TI RESOURCES OR USE THEREOF, AND REGARDLESS OF WHETHER TI HAS BEEN ADVISED OF THE POSSIBILITY OF SUCH DAMAGES.

Unless TI has explicitly designated an individual product as meeting the requirements of a particular industry standard (e.g., ISO/TS 16949 and ISO 26262), TI is not responsible for any failure to meet such industry standard requirements.

Where TI specifically promotes products as facilitating functional safety or as compliant with industry functional safety standards, such products are intended to help enable customers to design and create their own applications that meet applicable functional safety standards and requirements. Using products in an application does not by itself establish any safety features in the application. Designers must ensure compliance with safety-related requirements and standards applicable to their applications. Designer may not use any TI products in life-critical medical equipment unless authorized officers of the parties have executed a special contract specifically governing such use. Life-critical medical equipment is medical equipment where failure of such equipment would cause serious bodily injury or death (e.g., life support, pacemakers, defibrillators, heart pumps, neurostimulators, and implantables). Such equipment includes, without limitation, all medical devices identified by the U.S. Food and Drug Administration as Class III devices and equivalent classifications outside the U.S.

TI may expressly designate certain products as completing a particular qualification (e.g., Q100, Military Grade, or Enhanced Product). Designers agree that it has the necessary expertise to select the product with the appropriate qualification designation for their applications and that proper product selection is at Designers' own risk. Designers are solely responsible for compliance with all legal and regulatory requirements in connection with such selection.

Designer will fully indemnify TI and its representatives against any damages, costs, losses, and/or liabilities arising out of Designer's non-compliance with the terms and provisions of this Notice.

Mailing Address: Texas Instruments, Post Office Box 655303, Dallas, Texas 75265
Copyright © 2017, Texas Instruments Incorporated

Looking for pricing, stock, or lifecycle information?

Click below to explore more details on WIN SOURCE:

- View LM48556TLBD on WIN SOURCE
- Texas Instruments Information

Optimize Your Supply Chain with WIN SOURCE Solutions

- Global Sourcing Solution
- Obsolete Management
- Cost Control Management
- Shortage Management
- Alternative Solution
- Excess Inventory Management