3.3V CMOS Static RAM 4 Meg (256K x 16-Bit)

IDT71V416S
IDT71V416L

Features

- **256K x 16 advanced high-speed CMOS Static RAM**
- **JEDEC Center Power / GND pinout for reduced noise.**
- **Equal access and cycle times**
  - *Commercial and Industrial: 10/12/15ns*
- **One Chip Select plus one Output Enable pin**
- **Bidirectional data inputs and outputs directly LVTTL-compatible**
- **Low power consumption via chip deselect**
- **Upper and Lower Byte Enable Pins**
- **Single 3.3V power supply**
- **Available in 44-pin, 400 mil plastic SOJ package and a 44-pin, 400 mil TSOP Type II package and a 48 ball grid array, 9mm x 9mm package.**

Description

The IDT71V416 is a 4,194,304-bit high-speed Static RAM organized as 256K x 16. It is fabricated using IDT's high-perfomance, high-reliability CMOS technology. This state-of-the-art technology, combined with innovative circuit design techniques, provides a cost-effective solution for high-speed memory needs.

The IDT71V416 has an output enable pin which operates as fast as 5ns, with address access times as fast as 10ns. All bidirectional inputs and outputs of the IDT71V416 are LVTTL-compatible and operation is from a single 3.3V supply. Fully static asynchronous circuitry is used, requiring no clocks or refresh for operation.

The IDT71V416 is packaged in a 44-pin, 400 mil Plastic SOJ and a 44-pin, 400 mil TSOP Type II package and a 48 ball grid array, 9mm x 9mm package.

Functional Block Diagram

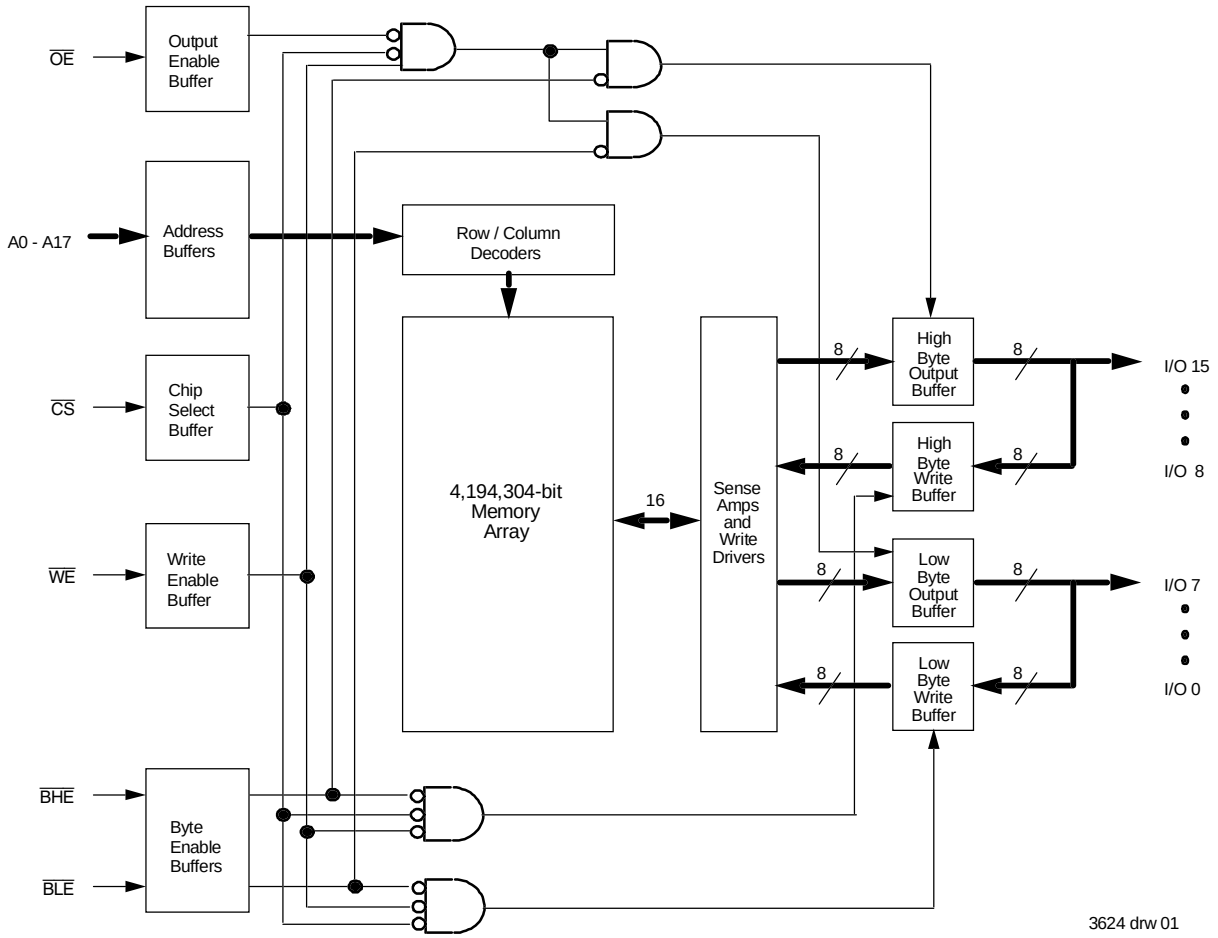

3624 drw 01

AUGUST 2000

©2000 Integrated Device Technology, Inc.

Pin Configurations - SOJ/TSOP

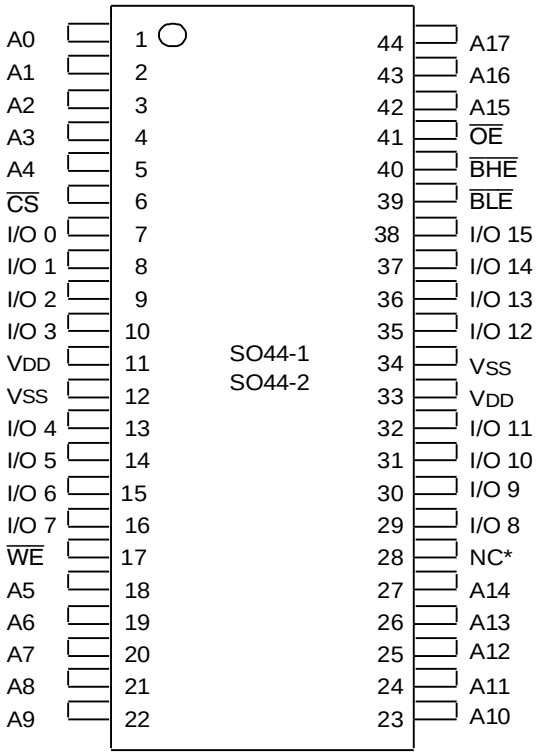

3624 drw 02

*Pin 28 can either be a NC or connected to Vss

Top View

Pin Configurations - 48 BGA

	1	2	3	4	5	6
A	$\overline{BLE}$	$\overline{OE}$	A_0	A_1	A_2	NC
B	I/O_0	$\overline{BHE}$	A_3	A_4	$\overline{CS}$	I/O_8
C	I/O_1	I/O_2	A_5	A_6	I/O_{10}	I/O_9
D	V_{SS}	I/O_3	A_{17}	A_7	I/O_{11}	V_{DD}
E	V_{DD}	I/O_4	NC	A_{16}	I/O_{12}	V_{SS}
F	I/O_6	I/O_5	A_{14}	A_{15}	I/O_{13}	I/O_{14}
G	I/O_7	NC	A_{12}	A_{13}	$\overline{WE}$	I/O_{15}
H	NC	A_8	A_9	A_{10}	A_{11}	NC

3624 tbl 11

Pin Descriptions

A_0 - A_{17}	Address Inputs	Input
$\overline{CS}$	Chip Select	Input
$\overline{WE}$	Write Enable	Input
$\overline{OE}$	Output Enable	Input
$\overline{BHE}$	High Byte Enable	Input
$\overline{BLE}$	Low Byte Enable	Input
I/O_0 - I/O_{15}	Data Input/Output	I/O
V_{DD}	3.3V Power	Pwr
V_{SS}	Ground	Gnd

3624 tbl 01

SOJ Capacitance

(T_A = +25°C, f = 1.0MHz)

Symbol	Parameter[1]	Conditions	Max.	Unit
C_{IN}	Input Capacitance	V_{IN} = 3dV	7	pF
$C_{I/O}$	I/O Capacitance	V_{OUT} = 3dV	8	pF

3624 tbl 02

48 BGA Capacitance

(T_A = +25°C, f = 1.0MHz)

Symbol	Parameter[1]	Conditions	Max.	Unit
C_{IN}	Input Capacitance	V_{IN} = 3dV	TBD	pF
$C_{I/O}$	I/O Capacitance	V_{OUT} = 3dV	TBD	pF

3624 tbl 02b

NOTE:

1. This parameter is guaranteed by device characterization, but not production tested.

Absolute Maximum Ratings(1)

Symbol	Rating	Value	Unit
V_{DD}	Supply Voltage Relative to V_{SS}	-0.5 to +4.6	V
V_{IN}, V_{OUT}	Terminal Voltage Relative to V_{SS}	-0.5 to V_{DD}+0.5	V
T_{BIAS}	Temperature Under Bias	-55 to +125	°C
T_{STG}	Storage Temperature	-55 to +125	°C
P_T	Power Dissipation	1	W
I_{OUT}	DC Output Current	50	mA

3624 tbl 04

NOTE:
1. Stresses greater than those listed under ABSOLUTE MAXIMUM RATINGS may cause permanent damage to the device. This is a stress rating only and functional operation of the device at these or any other conditions above those indicated in the operational sections of this specification is not implied. Exposure to absolute maximum rating conditions for extended periods may affect reliability.

Recommended Operating Temperature and Supply Voltage

Grade	Temperature	Vss	VDD
Commercial	0°C to +70°C	0V	See Below
Industrial	–40°C to +85°C	0V	See Below

3624 tbl 05

Recommended DC Operating Conditions

Symbol	Parameter	Min.	Typ.	Max.	Unit
V_{DD}	Supply Voltage	3.0	3.3	3.6	V
V_{SS}	Ground	0	0	0	V
V_{IH}	Input High Voltage	2.0	—	V_{DD}+0.3(1)	V
V_{IL}	Input Low Voltage	-0.3(2)	—	0.8	V

3624 tbl 06

NOTES:
1. VIH (max.) = VDD+2V for pulse width less than 5ns, once per cycle.
2. VIL (min.) = –2V for pulse width less than 5ns, once per cycle.

Truth Table(1)

$\overline{CS}$	$\overline{OE}$	$\overline{WE}$	$\overline{BLE}$	$\overline{BHE}$	I/O_0-I/O_7	I/O_8-I/O_{15}	Function
H	X	X	X	X	High-Z	High-Z	Deselected - Standby
L	L	H	L	H	$DATA_{OUT}$	High-Z	Low Byte Read
L	L	H	H	L	High-Z	$DATA_{OUT}$	High Byte Read
L	L	H	L	L	$DATA_{OUT}$	$DATA_{OUT}$	Word Read
L	X	L	L	L	$DATA_{IN}$	$DATA_{IN}$	Word Write
L	X	L	L	H	$DATA_{IN}$	High-Z	Low Byte Write
L	X	L	H	L	High-Z	$DATA_{IN}$	High Byte Write
L	H	H	X	X	High-Z	High-Z	Outputs Disabled
L	X	X	H	H	High-Z	High-Z	Outputs Disabled

3624 tbl 03

NOTE:
1. H = V_{IH}, L = V_{IL}, X = Don't care.

DC Electrical Characteristics

(V_{DD} = Min. to Max., Commercial and Industrial Temperature Ranges)

Symbol	Parameter	Test Conditions	IDT71V416 Min.	IDT71V416 Max.	Unit
$\|I_{LI}\|$	Input Leakage Current	V_{CC} = Max., V_{IN} = V_{SS} to V_{DD}	—	5	µA
$\|I_{LO}\|$	Output Leakage Current	V_{DD} = Max., $\overline{CS}$ = V_{IH}, V_{OUT} = V_{SS} to V_{DD}	—	5	µA
V_{OL}	Output Low Voltage	I_{OL} = 8mA, V_{DD} = Min.	—	0.4	V
V_{OH}	Output High Voltage	I_{OH} = -4mA, V_{DD} = Min.	2.4	—	V

3624 tbl 07

DC Electrical Characteristics[1, 2, 3]

(V_{DD} = Min. to Max., V_{LC} = 0.2V, V_{HC} = V_{DD} – 0.2V)

Symbol	Parameter		71V416S/L10 Com'l.	71V416S/L10 Ind.[5]	71V416S/L12 Com'l.	71V416S/L12 Ind.	71V416S/L15 Com'l.	71V416S/L15 Ind.	Unit
I_{CC}	Dynamic Operating Current $\overline{CS} \leq V_{LC}$, Outputs Open, V_{DD} = Max., f = f_{MAX}[4]	S	200	200	180	180	170	170	mA
		L	180	—	170	170	160	160	
I_{SB}	Dynamic Standby Power Supply Current $\overline{CS} \geq V_{HC}$, Outputs Open, V_{DD} = Max., f = f_{MAX}[4]	S	70	70	60	60	50	50	mA
		L	50	—	45	45	40	40	
I_{SB1}	Full Standby Power Supply Current (static) $\overline{CS} \geq V_{HC}$, Outputs Open, V_{DD} = Max., f = 0[4]	S	20	20	20	20	20	20	mA
		L	10	—	10	10	10	10	

3624 tbl 08

NOTES:
1. All values are maximum guaranteed values.
2. All inputs switch between 0.2V (Low) and V_{DD} -0.2V (High).
3. Power specifications are preliminary.
4. fMAX = 1/t_{RC} (all address inputs are cycling at f_{MAX}); f = 0 means no address input lines are changing.
5. Standard power 10ns (S10) speed grade only.

AC Test Loads

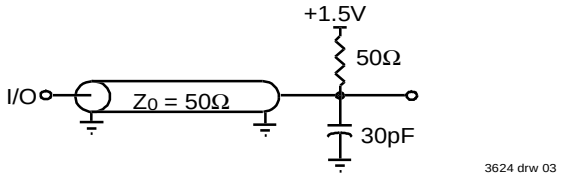

Figure 1. AC Test Load

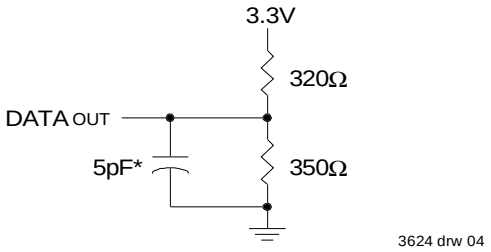

*Including jig and scope capacitance.

Figure 2. AC Test Load
(for t_{CLZ}, t_{OLZ}, t_{CHZ}, t_{OHZ}, t_{OW}, and t_{WHZ})

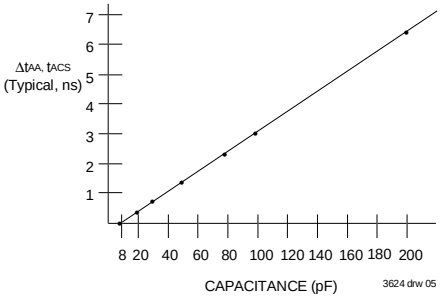

Figure 3. Output Capacitive Derating

AC Test Conditions

Input Pulse Levels	GND to 3.0V
Input Rise/Fall Times	1.5ns
Input Timing Reference Levels	1.5V
Output Reference Levels	1.5V
AC Test Load	Figures 1,2 and 3

3624 tbl 09

AC Electrical Characteristics

(V_{DD} = Min. to Max., Commercial and Industrial Temperature Ranges)

Symbol	Parameter	71V416S/L10[2]		71V416S/L12		71V416S/L15		Unit
		Min.	Max.	Min.	Max.	Min.	Max.	
READ CYCLE								
t_{RC}	Read Cycle Time	10	—	12	—	15	—	ns
t_{AA}	Address Access Time	—	10	—	12	—	15	ns
t_{ACS}	Chip Select Access Time	—	10	—	12	—	15	ns
t_{CLZ}[1]	Chip Select Low to Output in Low-Z	4	—	4	—	4	—	ns
t_{CHZ}[1]	Chip Select High to Output in High-Z	—	5	—	6	—	7	ns
t_{OE}	Output Enable Low to Output Valid	—	5	—	6	—	7	ns
t_{OLZ}[1]	Output Enable Low to Output in Low-Z	0	—	0	—	0	—	ns
t_{OHZ}[1]	Output Enable High to Output in High-Z	—	5	—	6	—	7	ns
t_{OH}	Output Hold from Address Change	4	—	4	—	4	—	ns
t_{BE}	Byte Enable Low to Output Valid	—	5	—	6	—	7	ns
t_{BLZ}[1]	Byte Enable Low to Output in Low-Z	0	—	0	—	0	—	ns
t_{BHZ}[1]	Byte Enable High to Output in High-Z	—	5	—	6	—	7	ns
WRITE CYCLE								
t_{WC}	Write Cycle Time	10	—	12	—	15	—	ns
t_{AW}	Address Valid to End of Write	8	—	8	—	10	—	ns
t_{CW}	Chip Select Low to End of Write	8	—	8	—	10	—	ns
t_{BW}	Byte Enable Low to End of Write	8	—	8	—	10	—	ns
t_{AS}	Address Set-up Time	0	—	0	—	0	—	ns
t_{WR}	Address Hold from End of Write	0	—	0	—	0	—	ns
t_{WP}	Write Pulse Width	8	—	8	—	10	—	ns
t_{DW}	Data Valid to End of Write	5	—	6	—	7	—	ns
t_{DH}	Data Hold Time	0	—	0	—	0	—	ns
t_{OW}[1]	Write Enable High to Output in Low-Z	3	—	3	—	3	—	ns
t_{WHZ}[1]	Write Enable Low to Output in High-Z	—	6	—	7	—	7	ns

3624 tbl 10

NOTE:
1. This parameter is guaranteed with the AC Load (Figure 2) by device characterization, but is not production tested.
2. Low power 10ns (L10) speed 0ºC to +70ºC temperature range only.

Timing Waveform of Read Cycle No. 1[1,2,3]

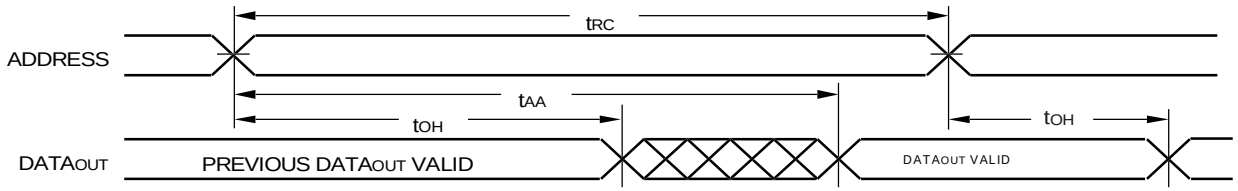

3624 drw 06

NOTES:
1. $\overline{WE}$ is HIGH for Read Cycle.
2. Device is continuously selected, $\overline{CS}$ is LOW.
3. $\overline{OE}$, $\overline{BHE}$, and $\overline{BLE}$ are LOW.

Timing Waveform of Read Cycle No. 2(1)

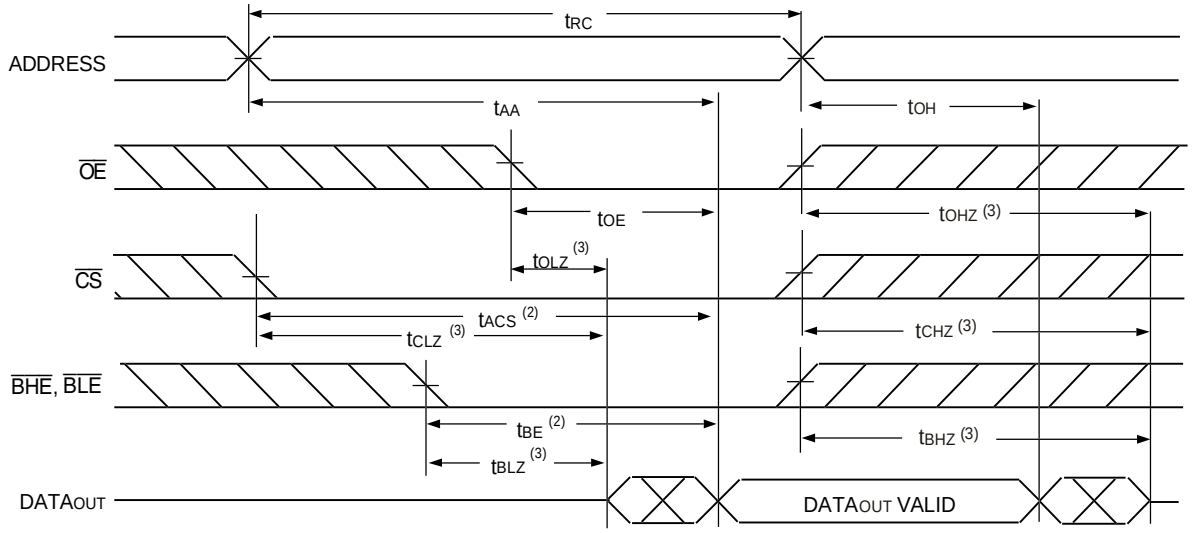

3624 drw 07

NOTES:
1. $\overline{WE}$ is HIGH for Read Cycle.
2. Address must be valid prior to or coincident with the later of $\overline{CS}$, $\overline{BHE}$, or $\overline{BLE}$ transition LOW; otherwise t_{AA} is the limiting parameter.
3. Transition is measured ±200mV from steady state.

Timing Waveform of Write Cycle No. 1 ($\overline{WE}$ Controlled Timing)(1,2,4)

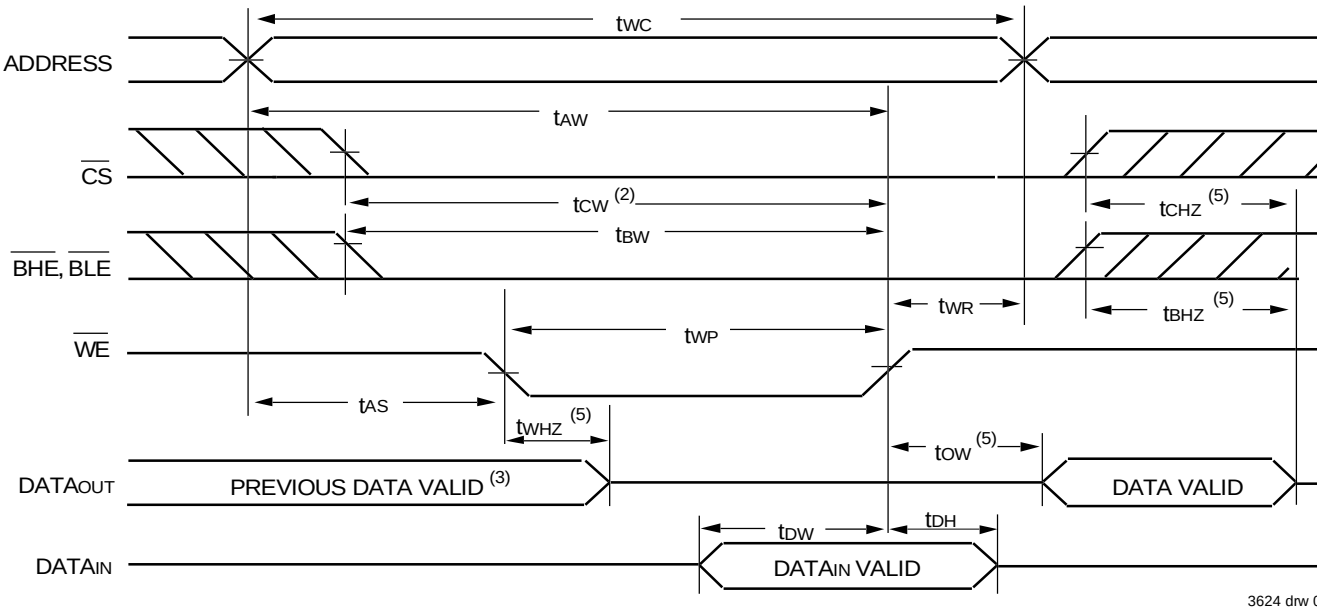

3624 drw 0

NOTES:
1. A write occurs during the overlap of a LOW $\overline{CS}$, LOW $\overline{BHE}$ or $\overline{BLE}$, and a LOW $\overline{WE}$.
2. $\overline{OE}$ is continuously HIGH. If during a $\overline{WE}$ controlled write cycle $\overline{OE}$ is LOW, t_{WP} must be greater than or equal to $t_{WHZ} + t_{DW}$ to allow the I/O drivers to turn off and data to be placed on the bus for the required t_{DW}. If $\overline{OE}$ is HIGH during a $\overline{WE}$ controlled write cycle, this requirement does not apply and the minimum write pulse is as short as the specified t_{WP}.
3. During this period, I/O pins are in the output state, and input signals must not be applied.
4. If the $\overline{CS}$ LOW or $\overline{BHE}$ and $\overline{BLE}$ LOW transition occurs simultaneously with or after the $\overline{WE}$ LOW transition, the outputs remain in a high-impedance state.
5. Transition is measured ±200mV from steady state.

Timing Waveform of Write Cycle No. 2 ($\overline{CS}$ Controlled Timing)(1,3)

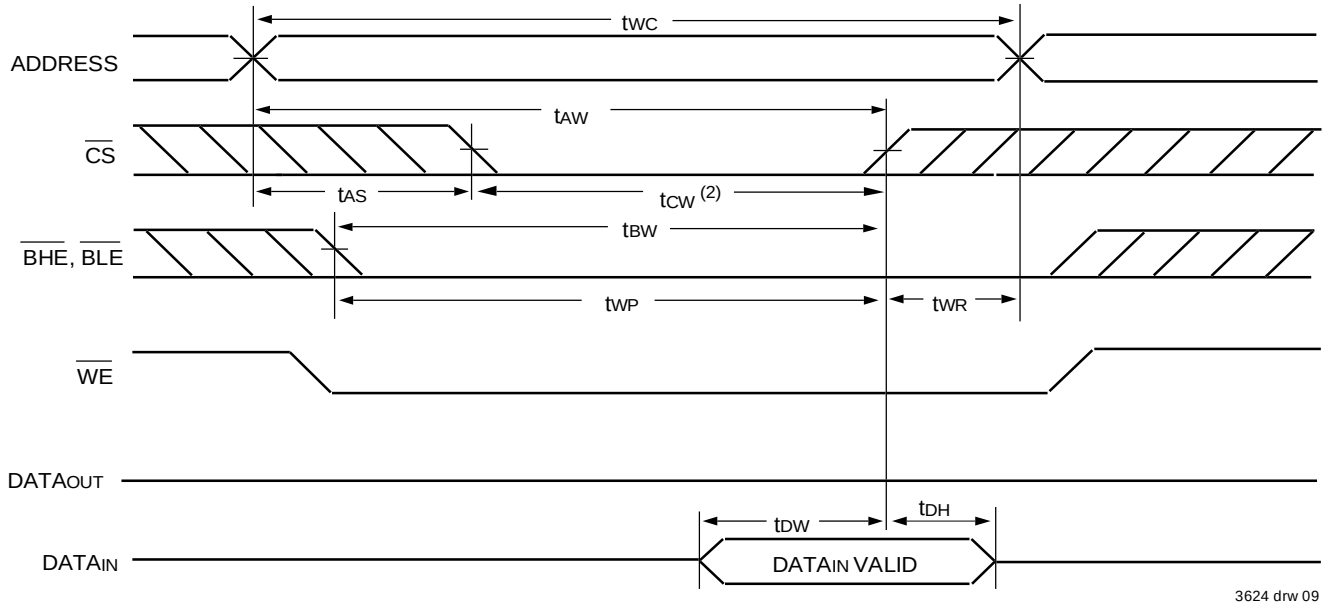

3624 drw 09

Timing Waveform of Write Cycle No. 3 ($\overline{BHE}$, $\overline{BLE}$ Controlled Timing)(1,3)

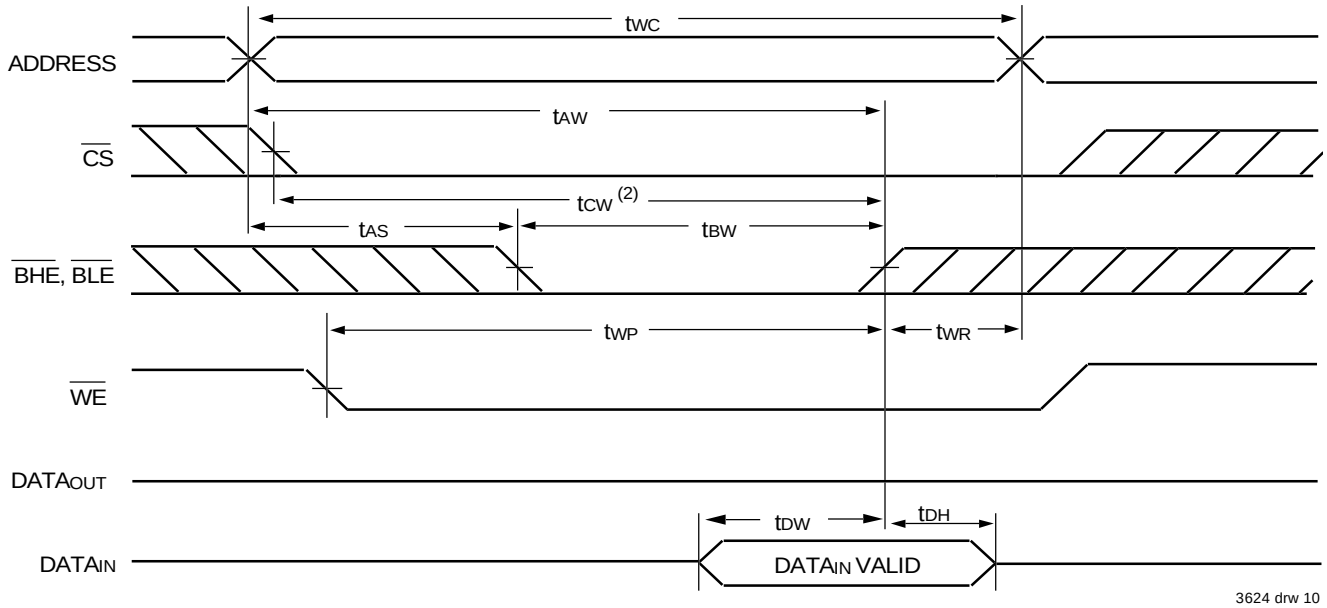

3624 drw 10

NOTES:
1. A write occurs during the overlap of a LOW $\overline{CS}$, LOW $\overline{BHE}$ or $\overline{BLE}$, and a LOW $\overline{WE}$.
2. During this period, I/O pins are in the output state, and input signals must not be applied.
3. If the $\overline{CS}$ LOW or $\overline{BHE}$ and $\overline{BLE}$ LOW transition occurs simultaneously with or after the $\overline{WE}$ LOW transition, the outputs remain in a high-impedance state.

Ordering Information

IDT 71V416 X XX XXX X

Device Type	Power	Speed	Package	Process/ Temperature Range

Process/ Temperature Range:

Blank	Commercial (0°C to +70°C)
I	Industrial (-40°C to +85°C)

Package:

Y	44-pin, 400-mil SOJ (SO44-1)
PH	44-pin TSOP Type II (SO44-2)
BE	48 Ball Grid Array

Speed:

10*	Speed in nanoseconds
12	
15	

Power:

S	Standard Power
L	Low Power

* Commercial only for low power 10ns (L10) speed grade and Industrial only for standard power 10ns (S10) speed grade.

3624 drw 11a

Datasheet Document History

08/5/99		Updated to new format
	Pg 6	Revised footnote for t_{CW} on Write Cycle No. 1 diagram
08/31/99	Pg. 1–9	Added Industrial temperature range offering
	Pg. 9	Added Datasheet Document History
03/24/00	Pg. 6	Changed note to Write cycle No. 1 according to footnotes
08/10/00		Add 48 ball grid array package offering
	Pg. 1	Correct TTL to LVTTL

CORPORATE HEADQUARTERS
2975 Stender Way
Santa Clara, CA 95054

for SALES:
800-345-7015 or 408-727-6116
fax: 408-492-8674
www.idt.com

for Tech Support:
sramhelp@idt.com
800-544-7726, x4033

The IDT logo is a registered trademark of Integrated Device Technology, Inc.

Looking for pricing, stock, or lifecycle information?

Click below to explore more details on WIN SOURCE:

- View IDT71V416S10Y on WIN SOURCE
- IDT, Integrated Device Technology Inc Information

Optimize Your Supply Chain with WIN SOURCE Solutions

- Global Sourcing Solution
- Obsolete Management
- Cost Control Management
- Shortage Management
- Alternative Solution
- Excess Inventory Management