THE DATASHEET OF

FMM-22S

1 Scope

The present specifications shall apply to an FMM-22S/R.

2 Outline

Type	Silicon Diode
Structure	Resin Molded
Applications	Commercial Frequency Rectification

3 Flammability

UL94V-0(Equivalent)

4 Absolute maximum ratings

No.	Item	Symbol	Unit	Rating	Conditions
1	Transient Peak Reverse Voltage	V_{RSM}	V	250	
2	Peak Reverse Voltage	V_{RM}	V	200	
3	Average Forward Current	$I_{F(AV)}$	A	10	Refer to Derating of 7
4	Peak Surge Forward Current	I_{FSM}	A	100	Half sinewave, one shot
5	I^2t Limiting Value	I^2t	A^2s	50	1msec≦t≦10msec
6	Junction Temperature	T_j	℃	-40～+150	
7	Storage Temperature	T_{stg}	℃	-40～+150	

No.1,2,4&5 show ratings per one chip.

5 Electrical characteristics (Ta=25℃ , unless otherwise specified)

No.	Item	Symbol	Unit	Value	Conditions
1	Forward Voltage Drop	V_F	V	1.1 max.	I_F=5.0A
2	Reverse Leakage Current	I_R	uA	10 max.	V_R=V_{RM}
3	Reverse Leakage Current Under High Temperature	$H \cdot I_R$	uA	100 max.	V_R=V_{RM}, T_j=150℃
4	Thermal Resistance	$R_{th(j-c)}$	℃/W	4.0 max.	Between Junction and case

No.1,2&3 show characteristics per one chip.

6 Characteristics

$I_{F(AV)}$ — P_F

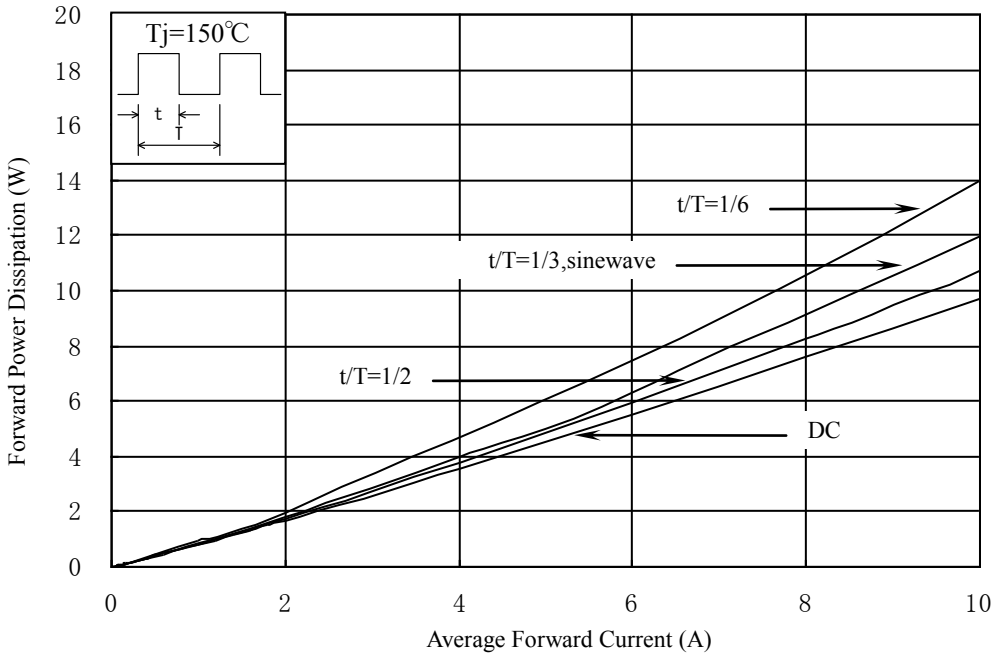

V_R — P_R

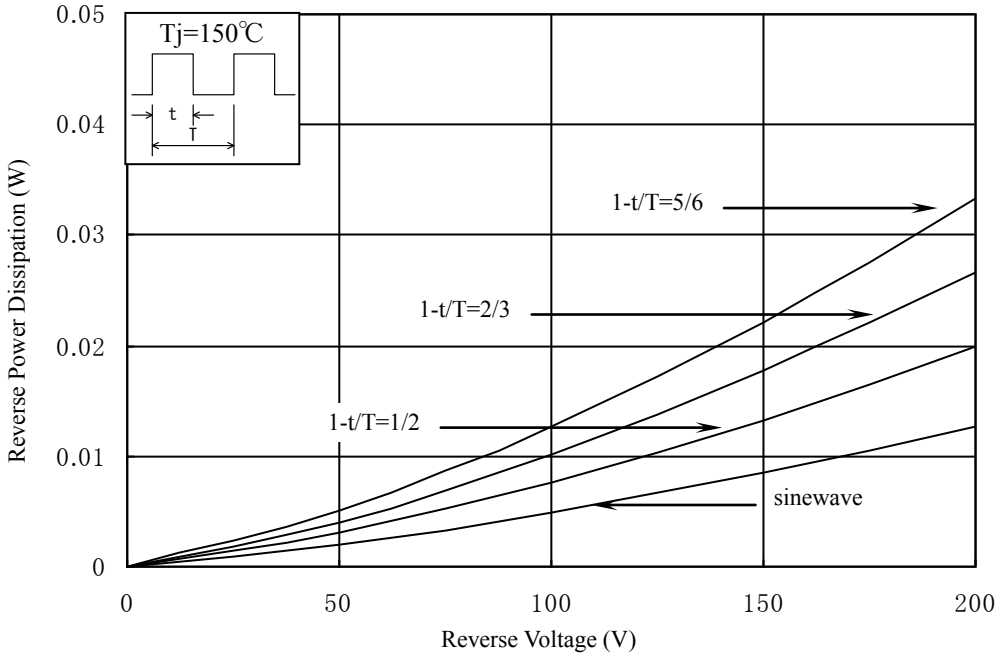

61426-01

7 Derating

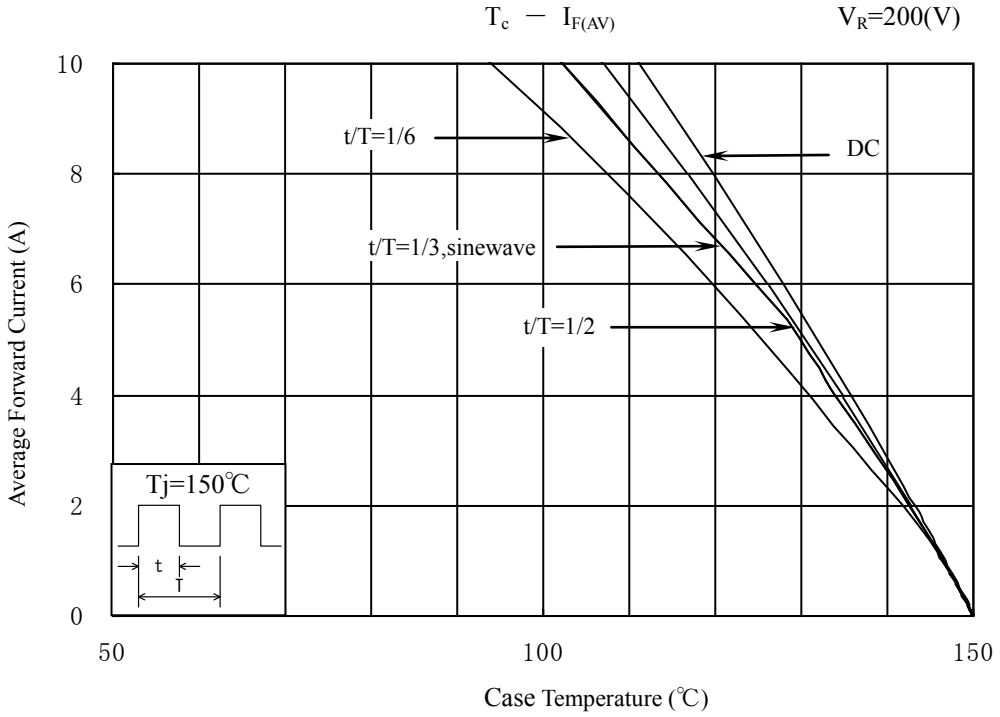
Tc — IF(AV)
VR=200(V)
10
8
6
4
2
0
Average Forward Current (A)
t/T=1/6
DC
t/T=1/3,sinewave
t/T=1/2
Tj=150℃
t
T
50
100
150
Case Temperature (℃)

8 Package information

8-1 Package type, physical dimensions and material

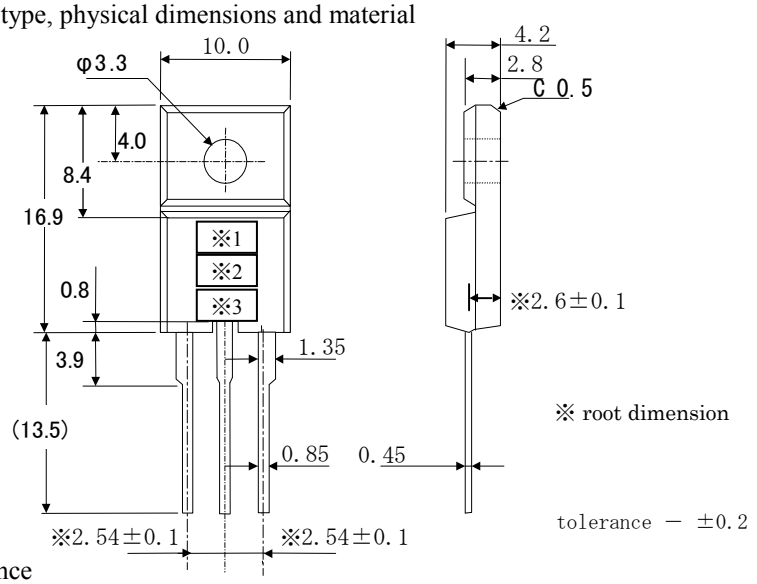

Dimensions in mm

8-2 Appearance

The body shall be clean and shall not bear any stain, rust or flaw.

8-3 Marking

Type Name	Marking		
	＊1 Type Name	＊2 Polarity	＊3 Lot number
FMM-22S	FMM22S	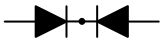	1st letter: Last digit of year 2nd letter: Month From 1 to 9 for Jan. to Sep., 10 月→O、11 月→N、12 月→D O for Oct., N for Nov., D for Dec. 3rd & 4th letter: Day ex. 4805 (Aug. 5, 2004)
FMM-22R	FMM22R	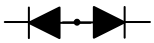	

●

Looking for pricing, stock, or lifecycle information?

Click below to explore more details on WIN SOURCE:

- View FMM-22S on WIN SOURCE
- Sanken Information

Optimize Your Supply Chain with WIN SOURCE Solutions

- Global Sourcing Solution
- Obsolete Management
- Cost Control Management
- Shortage Management
- Alternative Solution
- Excess Inventory Management