THE DATASHEET OF

ER3MB-TP

www.win-source.net 0086-755-83957316

Micro Commercial Components

Micro Commercial Components
20736 Marilla Street Chatsworth
CA 91311
Phone: (818) 701-4933
Fax: (818) 701-4939

ER3AB THRU ER3MB

3 Amp Super Fast Recovery Silicon Rectifier 50 to 1000 Volts

Features

- Lead Free Finish/Rohs Compliant (Note1) ("P"Suffix designates Compliant. See ordering information)
- Epoxy meets UL 94 V-0 flammability rating
- Moisture Sensitivity Level 1
- Easy Pick And Place
- High Temp Soldering: 260°C for 10 Seconds At Terminals
- Super Fast Recovery Times For High Effieciency
- Halogen free available upon request by adding suffix "-HF"

Maximum Ratings

- Operating Temperature: -50°C to +150°C
- Storage Temperature: -50°C to +150°C
- Typical Thermal Resistance; 16°C/W Junction To Lead

MCC Catalog Number	Device Marking	Maximum Recurrent Peak Reverse Voltage	Maximum RMS Voltage	Maximum DC Blocking Voltage
ER3AB	ER3AB	50V	35V	50V
ER3BB	ER3BB	100V	70V	100V
ER3CB	ER3CB	150V	105V	150V
ER3DB	ER3DB	200V	140V	200V
ER3GB	ER3GB	400V	280V	400V
ER3JB	ER3JB	600V	420V	600V
ER3KB	ER3KB	800V	560V	800V
ER3MB	ER3MB	1000V	700V	1000V

Electrical Characteristics @ 25°C Unless Otherwise Specified

Average Forward Current	$I_{F(AV)}$	3.0A	$T_A = 75°C$
Peak Forward Surge Current	I_{FSM}	100A	8.3ms, half sine
Maximum Instantaneous Forward Voltage ER3AB-3DB ER3GB ER3JB~3MB	V_F	.95V 1.25V 1.70V	$I_{FM} = 3.0A$; $T_J = 25°C$*
Maximum DC Reverse Current At Rated DC Blocking Voltage	I_R	5µA 200µA	$T_J = 25°C$ $T_J = 100°C$
Maximum Reverse Recovery Time ER3AB~ER3JB ER3KB~ER3MB	Trr	35ns 75ns	I_F=0.5A, I_R=1.0A, I_{rr}=0.25A
Typical Junction Capacitance	C_J	45pF	Measured at 1.0MHz, V_R=4.0V

*Pulse test: Pulse width 300 µsec, Duty cycle 2%

1. High Temperature Solder Exemptions Applied, see EU Directive Annex 7.

DO-214AA
(SMB) (LEAD FRAME)

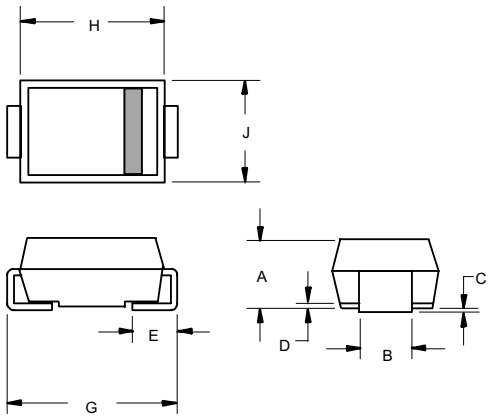

DIMENSIONS					
	INCHES		MM		
DIM	MIN	MAX	MIN	MAX	NOTE
A	.075	.095	1.91	2.41	
B	.077	.083	1.96	2.10	
C	.002	.008	.05	.20	
D	-----	.02	-----	.51	
E	.030	.060	.76	1.52	
G	.200	.220	5.08	5.59	
H	.160	.187	4.06	4.75	
J	.130	.155	3.30	3.94	

SUGGESTED SOLDER PAD LAYOUT

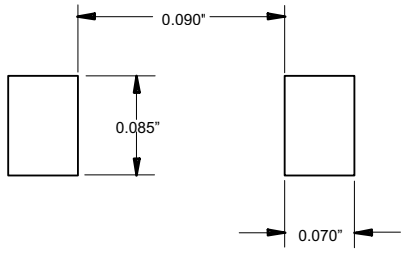

Micro Commercial Components

Figure 1
Typical Forward Characteristics

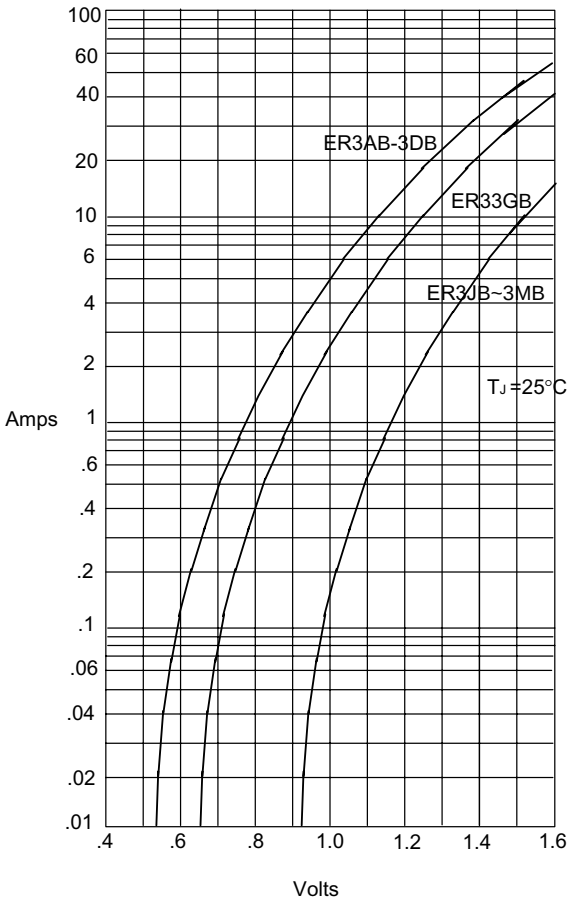

Instantaneous Forward Current - Amperes *versus*
Instantaneous Forward Voltage - Volts

Figure 2
Forward Derating Curve

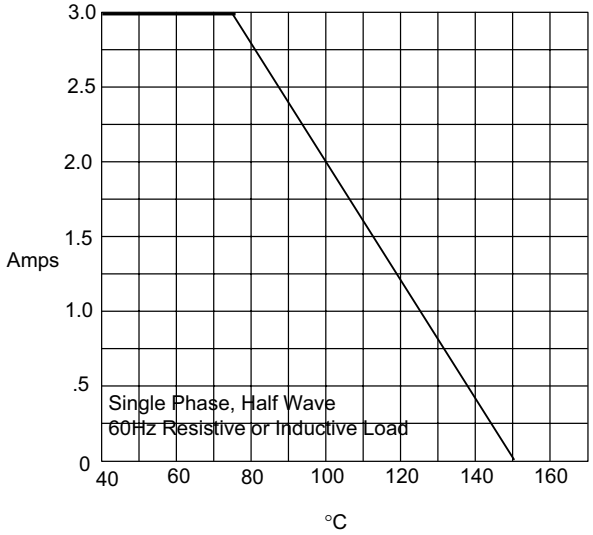

Average Forward Rectified Current - Amperes *versus*
Lead Temperature -°C

Figure 3
Typical Junction Capacitance

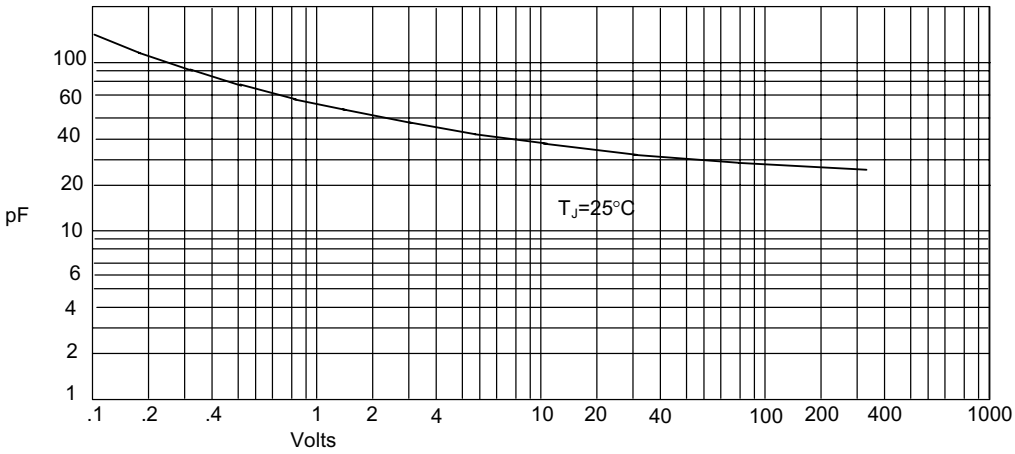

Junction Capacitance - pF *versus*
Reverse Voltage - Volts

Figure 4
Typical Reverse Characteristics

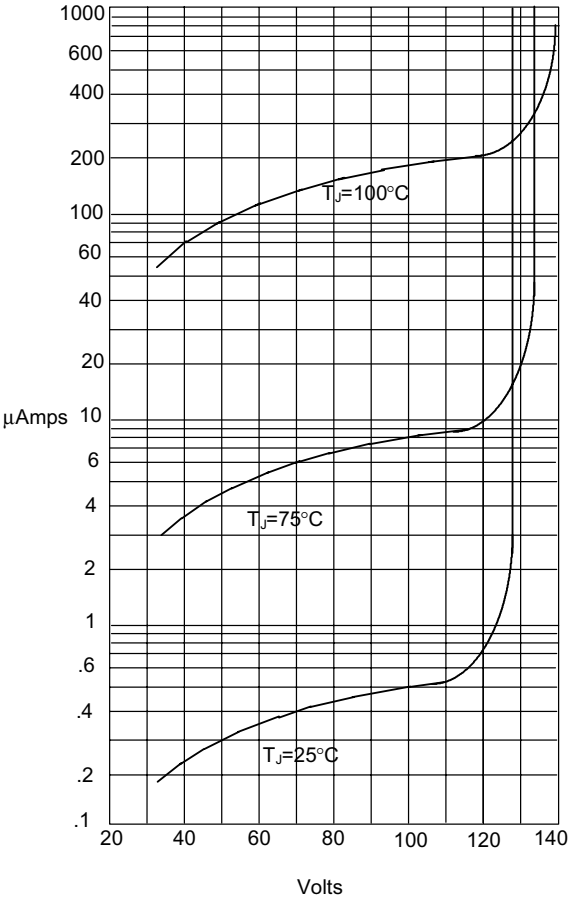

Instantaneous Reverse Leakage Current - MicroAmperes *versus*
Percent Of Rated Peak Reverse Voltage - Volts

Figure 5
Peak Forward Surge Current

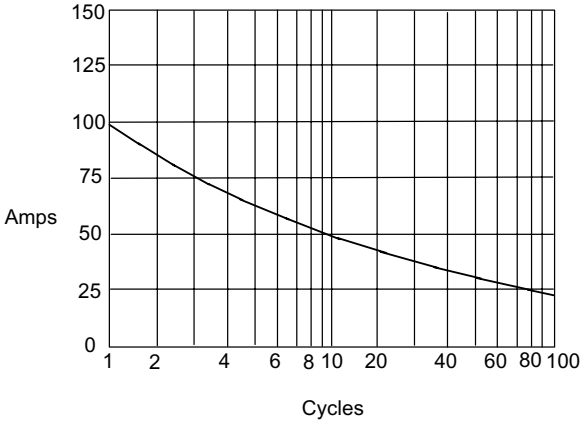

Peak Forward Surge Current - Amperes *versus*
Number Of Cycles At 60Hz - Cycles

Figure 6
Reverse Recovery Time Characteristic And Test Circuit Diagram

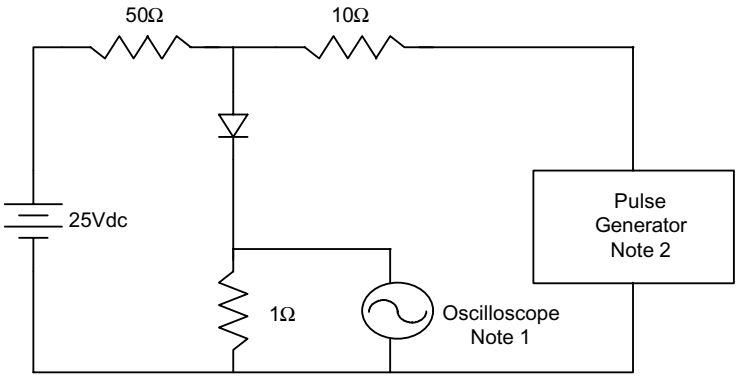

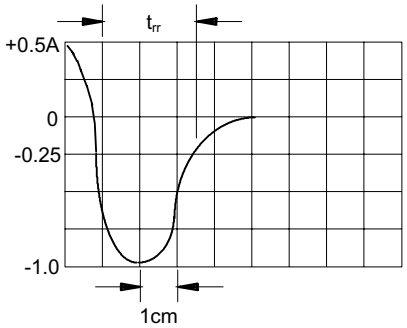

Set Time Base for 20/100ns/cm

Notes:
1. Rise Time = 7ns max.
Input impedance = 1 megohm, 22pF
2. Rise Time = 10ns max.
Source impedance = 50 ohms
3. Resistors are non-inductive

Micro Commercial Components

Ordering Information :

Device	Packing
Part Number-TP	Tape&Reel: 3Kpcs/Reel

Note : Adding "-HF" suffix for halogen free, eg. Part Number-TP-HF

*****IMPORTANT NOTICE*****

Micro Commercial Components Corp. reserves the right to make changes without further notice to any product herein to make corrections, modifications , enhancements , improvements , or other changes . ***Micro Commercial Components Corp .*** does not assume any liability arising out of the application or use of any product described herein; neither does it convey any license under its patent rights ,nor the rights of others . The user of products in such applications shall assume all risks of such use and will agree to hold ***Micro Commercial Components Corp .*** and all the companies whose products are represented on our website, harmless against all damages.

*****LIFE SUPPORT*****

MCC's products are not authorized for use as critical components in life support devices or systems without the express written approval of Micro Commercial Components Corporation.

*****CUSTOMER AWARENESS*****

Counterfeiting of semiconductor parts is a growing problem in the industry. Micro Commercial Components (MCC) is taking strong measures to protect ourselves and our customers from the proliferation of counterfeit parts. MCC strongly encourages customers to purchase MCC parts either directly from MCC or from Authorized MCC Distributors who are listed by country on our web page cited below. Products customers buy either from MCC directly or from Authorized MCC Distributors are genuine parts, have full traceability, meet MCC's quality standards for handling and storage. **MCC will not provide any warranty coverage or other assistance for parts bought from Unauthorized Sources.** MCC is committed to combat this global problem and encourage our customers to do their part in stopping this practice by buying direct or from authorized distributors.

Looking for pricing, stock, or lifecycle information?

Click below to explore more details on WIN SOURCE:

- View ER3MB-TP on WIN SOURCE
- Micro Commercial Co Information

Optimize Your Supply Chain with WIN SOURCE Solutions

- Global Sourcing Solution
- Obsolete Management
- Cost Control Management
- Shortage Management
- Alternative Solution
- Excess Inventory Management