THE DATASHEET OF

C44AFGP5750ZA0J

www.win-source.net 0086-755-83957316

C44A

MKP Series

ALUMINIUM CASE CAPACITORS
GENERAL PURPOSE APPLICATION
SCREW TERMINALS

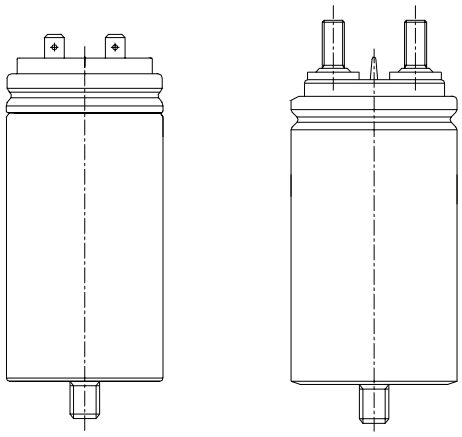

TECHNICAL DATA

General technical data	VDE 0560 , IEC 071 , EN 61071
Application class (DIN 40040)	GPD / LS
Temperature range (Case)	-40 to + 85 °C
Max permissible ambient temperature	+70 °C
Capacitance tolerance code (15th digit)	J = ± 5% ; K = ± 10%
Test voltage terminal to case U_{TT}	1.5 U_{RMS} for 60 seconds
Test voltage terminal to case U_{TC}	3kV - 50Hz for 60 seconds
Rated insulation voltage U_i	700 V - 50 Hz - Insulation group B (VDE 0110 part 1)
Permissible relative humidity	Annual average ≤ 95% on 30 days / year, continuously 100% on other days occasionally 100%. Dewing not admissible
IEC climatic category	40 / 85 / 21
Degree of protection	IP00
Capacitance deviation in the operating temperature range of –40 to +85 °C	±1.5% max on capacitance value measured at +20 °C
Change of capacitance versus operating time	-3% after 30.000 hours at U_{RMS} or after 100.000 hours at Un
Case components	Aluminium case plus plastic insulating deck flame retardant execution (UL class 94 V1) .
Terminals	Tinned brass fastons or screws (See figure on top)
Installation	Whatever Position
Life Expectancy	≥ 30.000 hours at U_{RMS} ; ≥ 100.000 hours at Un
Failure quota	300 / 10^9 components hour

PEAK VOLTAGE TABLE

Un Vdc	U_{PK} Vdc	U_{RMS} Vac
400	600	250
600	800	330

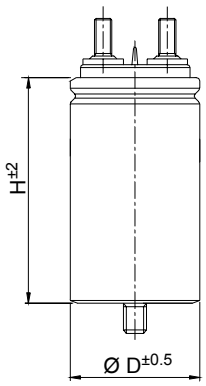

GENERAL CHARACTERISTICS

Code	C	Un	K	Tgδ x 10^{-4}		ESR Typ.	dv/dt	I_{RMS}	I_{PKR}	Case		Approx Weight
	µF	Vdc	°C/W	Max	Typ.	mΩ	V/µs	A	A	D	H	g
C44AFFP5150ZA0J	15	400	7.8	10	5	5	30	16	450	45	80	135
C44AFFP5200ZE0J	20	400	6.2	10	5	5	30	18	600	45	80	135
C44AFFP5220ZA0J	22	400	6.2	12	6	5	30	18	660	45	80	135
C44AFFP5250ZA0J	25	400	6.2	12	7	5	30	18	750	45	80	135
C44AFFP5300ZA0J	30	400	3.5	20	15	6	20	22	600	50	101	200
C44AFFP5400ZA0J	40	400	2.7	20	15	6	20	25	800	50	101	200
C44AFFP5500ZE0J	50	400	2.6	20	15	6	20	25	1000	50	101	200
C44AFGP5600ZA0J	60	400	2.6	25	15	6	20	25	1200	60	101	240
C44AFGP5750ZA0J	75	400	3.2	30	20	5	20	30	1500	60	101	240
C44AFGP6100ZG0J	100	400	4.0	30	20	4	15	32	1500	60	138	315
C44AFGP6130ZA0J	130	400	4.0	30	20	4	15	32	2000	65	138	360
C44AFGP6150ZA0J	150	400	4.0	40	30	4	15	32	2250	70	138	530
C44AFGP6200ZE0J	200	400	4.0	40	30	4	10	32	2000	76	138	740
C44AFGR6250ZA0J	250	400	4.0	40	30	4	10	32	2500	85	150	900
C44AFGR6300ZA0J	300	400	1.25	50	40	5	20	50	6000	85	185	1080
C44AFGR6330ZA0J	330	400	1.25	50	40	5	20	50	6000	85	185	1150
C44AHFP5100ZA0J	10	600	7.8	10	5	5	40	16	400	45	80	135
C44AHFP5150ZA0J	15	600	7.7	10	5	4	40	18	600	45	105	160
C44AHFP5200ZB0J	20	600	5.2	15	6	4	30	22	600	45	101	160
C44AHFP5220ZA0J	22	600	5.3	15	6	3	30	25	660	50	101	200
C44AHFP5250ZB0J	25	600	3.5	20	15	6	20	22	600	50	101	200
C44AHFP5300ZC0J	30	600	10.3	15	7	2	30	25	900	50	101	200
C44AHGP5330ZA0J	33	600	8.0	15	7	2	30	25	990	55	101	235
C44AHGP5400ZB0J	40	600	8.0	10	6	2	30	25	1200	60	101	240
C44AHGP5500ZG0J	50	600	3.2	15	10	5	20	25	1000	55	138	300
C44AHGP5600ZB0J	60	600	3.1	15	8	5	20	32	1200	60	138	315
C44AHGP5700ZA0J	70	600	3.2	25	15	5	20	32	1400	65	138	360
C44AHGP5750ZA0J	75	600	3.2	25	15	5	20	32	1500	65	138	360
C44AHGP5800ZA0J	80	600	3.2	25	15	5	20	32	1600	65	135	530
C44AHGP6100ZA0J	100	600	3.2	25	15	5	20	32	2000	76	135	625
C44AHGR6100ZB0J	100	600	1.25	15	10	5	30	50	3000	85	138	770

PEAK VOLTAGE TABLE

Un Vdc	U_{PK} Vdc	U_{RMS} Vac
700	900	400
850	1000	450

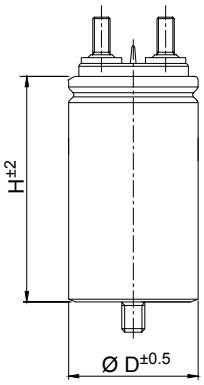

GENERAL CHARACTERISTICS

Code	C	Un	K	Tgδ x 10^{-4}		ESR Typ.	dv/dt	I_{RMS}	I_{PKR}	Case		Approx Weight
	µF	Vdc	°C/W	Max	Typ.	mΩ	V/µs	A	A	D	H	g
C44AJFP4500ZA0J	5	700	13.0	8	2	3	50	16	250	45	80	135
C44AJFP4600ZA0J	6	700	13.0	8	2	3	50	16	300	45	80	135
C44AJFP4750ZA0J	7.5	700	10.3	10	3	3	50	18	375	45	80	135
C44AJFP5100ZA0J	10	700	10.0	10	3	3	50	18	500	50	101	200
C44AJFP5150ZB0J	15	700	5.3	15	6	3	40	25	600	50	101	200
C44AJFP5200ZD0J	20	700	5.3	15	10	3	40	25	800	50	101	200
C44AJGP5220ZA0J	22	700	5.3	15	10	3	40	25	880	55	101	235
C44AJGP5250ZA0J	25	700	5.3	15	10	3	40	25	1000	60	101	240
C44AJGP5300ZB0J	30	700	5.3	15	12	3	30	25	900	60	138	310
C44AJGP5330ZA0J	33	700	5.3	15	10	3	35	25	990	60	138	310
C44AJGP5400ZA0J	40	700	4.0	25	15	4	35	32	1200	65	138	360
C44AJGP5500ZA0J	50	700	4.0	25	15	4	35	32	1500	65	138	360
C44AJGP5600ZA0J	60	700	4.0	25	15	4	30	32	1800	76	138	625
C44AJGP5700ZA0J	70	700	4.0	25	15	4	30	32	2100	76	138	625
C44AJGR5750ZA0J	75	700	4.0	25	15	4	30	32	2250	85	137	770
C44AJGR6100ZA0J	100	700	2.0	15	10	3	40	50	4000	85	185	1150
C44AMFP4300ZA0J	3	850	7.8	10	5	5	60	16	180	45	80	135
C44AMFP4500ZA0J	5	850	7.8	10	5	5	60	16	300	45	80	135
C44AMFP4600ZA0J	6	850	6.2	10	5	5	60	18	360	45	80	135
C44AMFP4800ZA0J	8	850	4.1	10	6	5	50	22	400	45	105	200
C44AMFP5100ZD0J	10	850	3.2	10	6	5	50	25	500	50	101	200
C44AMGP5150ZA0J	15	850	2.0	10	7	8	50	25	750	60	101	240
C44AMGP5200ZA0J	20	850	2.6	10	7	6	50	25	1000	65	101	310
C44AMGP5220ZA0J	22	850	1.5	12	5	4	40	25	880	55	138	300
C44AMGP5250ZA0J	25	850	3.2	15	7	5	40	25	1000	55	138	300
C44AMGP5300ZA0J	30	850	3.2	15	8	5	40	32	1200	65	138	380
C44AMGP5330ZA0J	33	850	3.2	15	8	5	40	32	1320	65	138	360
C44AMGP5350ZA0J	35	850	3.2	15	10	5	40	32	1400	65	138	360
C44AMGP5400ZB0J	40	850	3.2	15	10	5	40	32	1600	76	138	580
C44AMGP5500ZA0J	50	850	3.2	20	10	5	40	32	2000	76	138	625
C44AMGR5600ZA0J	60	850	3.2	20	10	5	40	32	2400	85	137	770

PEAK VOLTAGE TABLE

Un Vdc	U_{PK} Vdc	U_{RMS} Vac
1200	1600	500
1500	2000	630

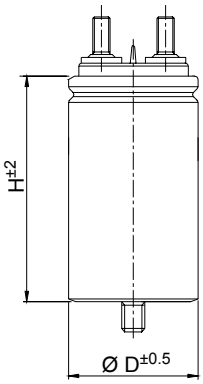

GENERAL CHARACTERISTICS

Codes	C	Un	K	Tgδ x 10^{-4}		ESR Typ.	dv/dt	I_{RMS}	I_{PKR}	Case		Approx Weight
	µF	Vdc	°C/W	Max.	Typ.	mΩ	V/µs	A	A	D	H	g
C44APFP4100ZA0J	1	1200	17.7	5	2.5	2.5	300	15	300	45	80	135
C44APFP4150ZA0J	1.5	1200	17.7	5	2.5	2.5	300	15	450	45	80	135
C44APFP4200ZD0J	2	1200	17.7	5	2.5	2.5	300	15	600	45	80	135
C44APFP4220ZA0J	2.2	1200	19.5	5	2.5	2	300	16	660	45	80	135
C44APFP4250ZA0J	2.5	1200	15.4	5	2.5	2	300	18	750	45	80	135
C44APFP4300ZB0J	3	1200	12.5	5	2.5	2	300	20	900	50	76	150
C44APFP4400ZA0J	4	1200	12.5	5	2.5	2	300	20	1200	50	101	200
C44APFP4500ZB0J	5	1200	10.3	5	2.5	2	300	22	1500	50	101	200
C44APFP4500ZA0J	5	1200	3.3	5	2.5	2	400	40	2000	50	138	280
C44APGP4600ZB0J	6	1200	8.0	5	2.5	2	300	25	1800	55	101	235
C44APGP4680ZB0J	6.8	1200	8.0	5	2.5	2	300	25	2040	60	101	240
C44APGP4750ZF0J	7.5	1200	10.6	5	2.8	1.5	300	25	2250	50	138	280
C44APGP4800ZE0J	8	1200	4.5	5	2.8	3.5	250	25	2000	55	138	300
C44APGP5100ZE0J	10	1200	5.3	5	2.8	3	250	25	2500	55	138	300
C44APGP5100ZF0J	10	1200	3.2	5	2.5	2	300	50	3000	60	138	310
C44APGP5100ZH0J	10	1200	1.4	5	2.5	2	350	60	3500	65	158	350
C44APGP5125ZA0J	12.5	1200	3.2	5	2.5	2	300	50	3750	76	138	625
C44APGP5150ZB0J	15	1200	6.4	5	2.8	2.5	250	32	3750	76	138	625
C44APGR5200ZB0J	20	1200	6.4	5	2.8	2.5	250	32	5000	85	137	770
C44APGR5220ZA0J	22	1200	1.1	5	2.5	2.5	300	50	6600	76	200	940
C44ASFP4100ZA0J	1	1500	17.7	5	2.5	2.5	400	15	700	45	80	135
C44ASFP4200ZB0J	2	1500	15.6	5	2.8	2.5	400	16	800	50	76	150
C44ASFP4300ZA0J	3	1500	10.3	5	2.8	2	400	22	1200	50	101	200
C44ASGP4400ZA0J	4	1500	8.0	5	2.8	2	400	25	1600	60	101	265
C44ASGP4500ZB0J	5	1500	8.0	5	2.8	2	400	25	2000	65	101	350
C44ASGP4750ZA0J	7.5	1500	5.3	5	2.8	3	300	25	2250	65	138	380
C44ASGP5100ZA0J	10	1500	5.3	5	2.8	3	300	32	3000	70	138	530
C44ASGR5120ZA0J	12	1500	5.3	5	2.8	3	300	32	3600	85	137	770
C44ASGR5150ZA0J	15	1500	5.3	5	2.8	3	300	32	4500	85	137	770

DRAWINGS

MECHANICAL CHARACTERISTICS

Case	Brass screw terminals			Bolt		
D	Driving Torque Nm	Creepage Distance	Clearance In air	M	H	Driving Torque Nm
45	4	14	10	M 8	10	6
50	4	14	10	M 8	10	6
55	4	16	10	M 12	12.5	10
60	4	18	10	M 12	12.5	10
65	4	20	10	M 12	12.5	10
70	4	22	10	M 12	12.5	10
85	7	22	10	M 12	12.5	10

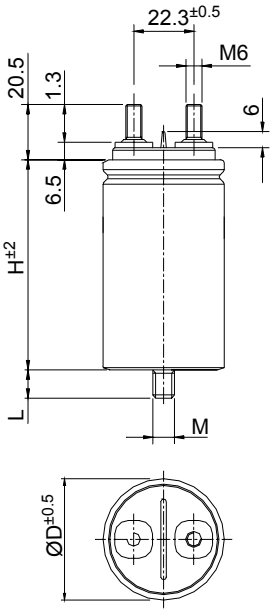

TERMINATIONS

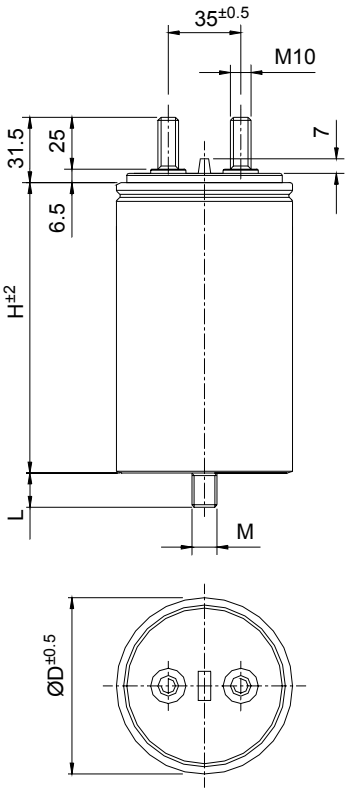

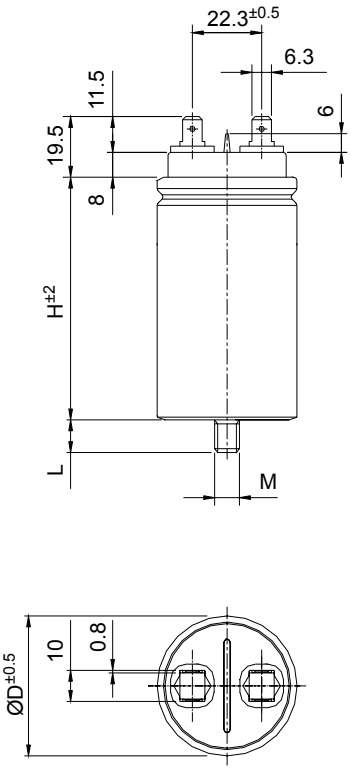

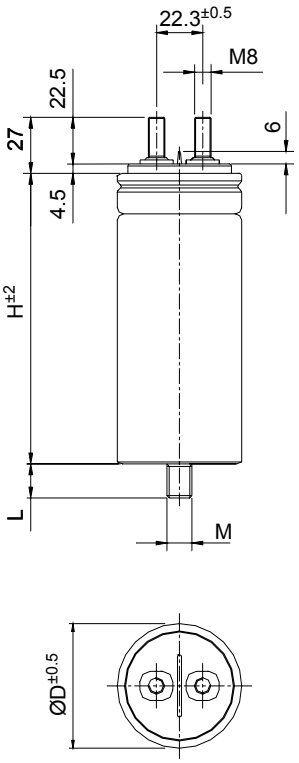

Statements of suitability for certain applications are based on our knowledge of typical operating conditions for such applications, but are not intended to constitute – and we specifically disclaim – any warranty concerning suitability for a specific customer application or use. This Information is intended for use only by customers who have the requisite experience and capability to determine the correct products for their application. Any technical advice inferred from this Information or otherwise provided by us with reference to the use of our products is given gratis, and we assume no obligation or liability for the advice given or results obtained.

Looking for pricing, stock, or lifecycle information?

Click below to explore more details on WIN SOURCE:

- View C44AFGP5750ZA0J on WIN SOURCE
- Kemet Information

Optimize Your Supply Chain with WIN SOURCE Solutions

- Global Sourcing Solution
- Obsolete Management
- Cost Control Management
- Shortage Management
- Alternative Solution
- Excess Inventory Management