THE DATASHEET OF

1456912

www.win-source.net 0086-755-83957316

Extract from the online catalog

SAC-3P-M12MR/ 5,0-800

Order No.: 1456912

http://eshop.phoenixcontact.de/phoenix/treeViewClick.do?UID=1456912

Sensor/Actuator cable, 3-position, PUR halogen-free, welding sputter-resistant, highly flexible, Gray RAL 7001, Plug, angled M12, A-coded, on Free conductor end, Cable length: 5 m

Commercial data

GTIN (EAN)	4 046356 593274
Note	Made-to-order
sales group	D110
Pack	1 pcs.
Customs tariff	85444290

Product notes

WEEE/RoHS-compliant since: 07/06/2010

http://www.download.phoenixcontact.com Please note that the data given here has been taken from the online catalog. For comprehensive information and data, please refer to the user documentation. The General Terms and Conditions of Use apply to Internet downloads.

Technical data

General data

Rated current at 40°C	4 A
Rated voltage	250 V
Number of positions	3
Volume resistance	≤ 5 mΩ

Insulation resistance	≥ 100 MΩ
Length of cable	5 m
Ambient temperature (operation)	-25 °C ... 90 °C (Male connector / female connector)

General characteristics

Standards/regulations	M12 connector IEC 61076-2-101
Coding	A - standard
Surge voltage category	II
Pollution degree	3
Degree of protection	IP65/IP68/IP69K
Insertion/withdrawal cycles	≥ 100
Contact material	CuSn
Contact surface material	Ni/Au
Contact carrier material	TPU GF
Material of grip body	TPU, hardly inflammable, self-extinguishing
Material, knurls	Zinc die-cast, (nickel-plated)
Status display	No

Conductor data

Cable type	PUR halogen-free, highly flexible, resistant to welding beads, gray
Cable type (abbreviation)	800
Cable abbreviation	Li12Y11Y-HF
Conductor cross section	0.34 mm²
AWG signal line	22
Conductor structure signal line	42x 0.10 mm
Core diameter including insulation	1.3 mm ±0.05 mm
External cable diameter	4.5 mm ±0.2 mm
Wire colors	Brown, blue, black
External sheath, color	Gray RAL 7001
Insulation resistance	≥ 20 MΩ*km
Conductor resistance	Approx. 53 Ω/km
Nominal voltage, conductor	300 V
Test voltage, conductor	2000 V
Overall twist	3 wires, twisted
Outer sheath, material	PUR
Material conductor insulation	PES

Conductor material	Bare Cu litz wires
Smallest bending radius, fixed installation	23 mm
Smallest bending radius, movable installation	50 mm
Number of bending cycles	15000000
Bending radius	50 mm
Traversing path	0.9 m
Traversing rate	5 m/s
Acceleration	30 m/s²
Torsion force	± 360 °/m
Ambient temperature (operation)	-40 °C ... 90 °C (cable, fixed installation)
	-30 °C ... 90 °C (cable, flexible installation)
Special properties	Sheath resistant to welding beads, can be recycled, matt, without adhesion, wear-resistant, flame resistant and self-extinguishing
	Free from silicone and cadmium
	Free of substances which would hinder coating with paint or varnish
Flame resistance	DIN VDE 0472 part 804, test type B
	IEC 60332-1
	In accordance with UL FT-2
Halogen-free	The cable is halogen-free
Resistance to oil	nach VDE 0250 Teil 407
Other resistance	Highly resistant to acids, alkaline solutions and solvents

Diagrams/Drawings

Dimensioned drawing

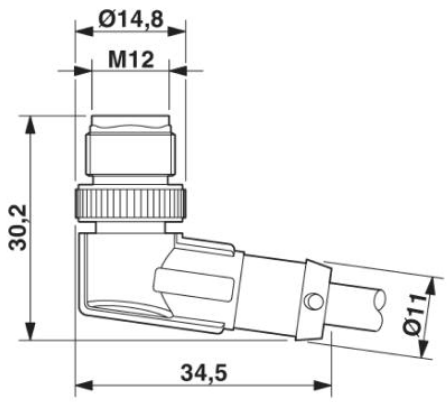

M12 x 1 male connector, angled

Circuit diagram

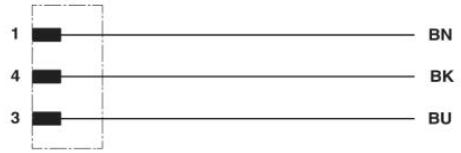

Contact assignment of the M12 plug

Schematic diagram

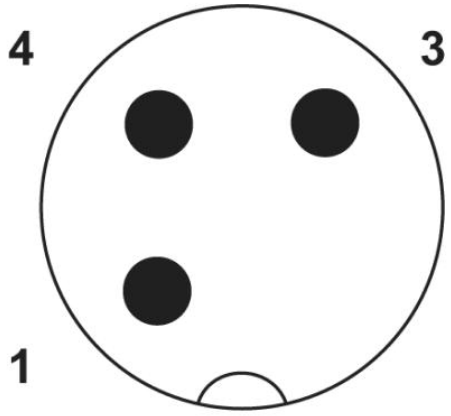

Pin assignment M12 plug, 3-pos., A-coded, view male side

Address

PHOENIX CONTACT Inc., USA
586 Fulling Mill Road
Middletown, PA 17057,USA
Phone (800) 888-7388
Fax (717) 944-1625
http://www.phoenixcon.com

© 2011 Phoenix Contact
Technical modifications reserved;

Looking for pricing, stock, or lifecycle information?

Click below to explore more details on WIN SOURCE:

- View 1456912 on WIN SOURCE
- Phoenix Contact Information

Optimize Your Supply Chain with WIN SOURCE Solutions

- Global Sourcing Solution
- Obsolete Management
- Cost Control Management
- Shortage Management
- Alternative Solution
- Excess Inventory Management