THE DATASHEET OF

APS4812B-LW100-R

www.win-source.net 0086-755-83957316

pui audio inc
a projects unlimited company
3541 Stop Eight Road • Dayton, Ohio 45414

APS4812B-LW100-R
48mm Piezo Speaker

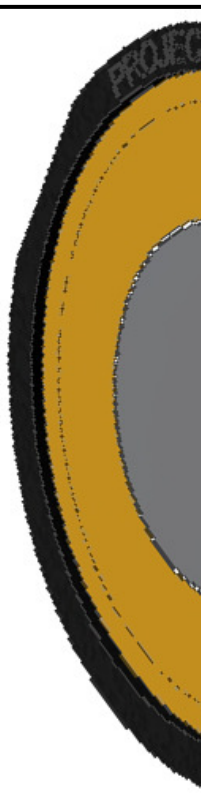

Product Overview

- 48mm diameter speaker built using a piezo ceramic for minimum current draw
- Designed to work with TTL or CMOS signals as high as 30Vp-p
- Only 2.2 mm thick for slim devices that need high output
- Convenient 100mm leads for quick connection

Frequency Response (5Vp-p @ 10 cm)

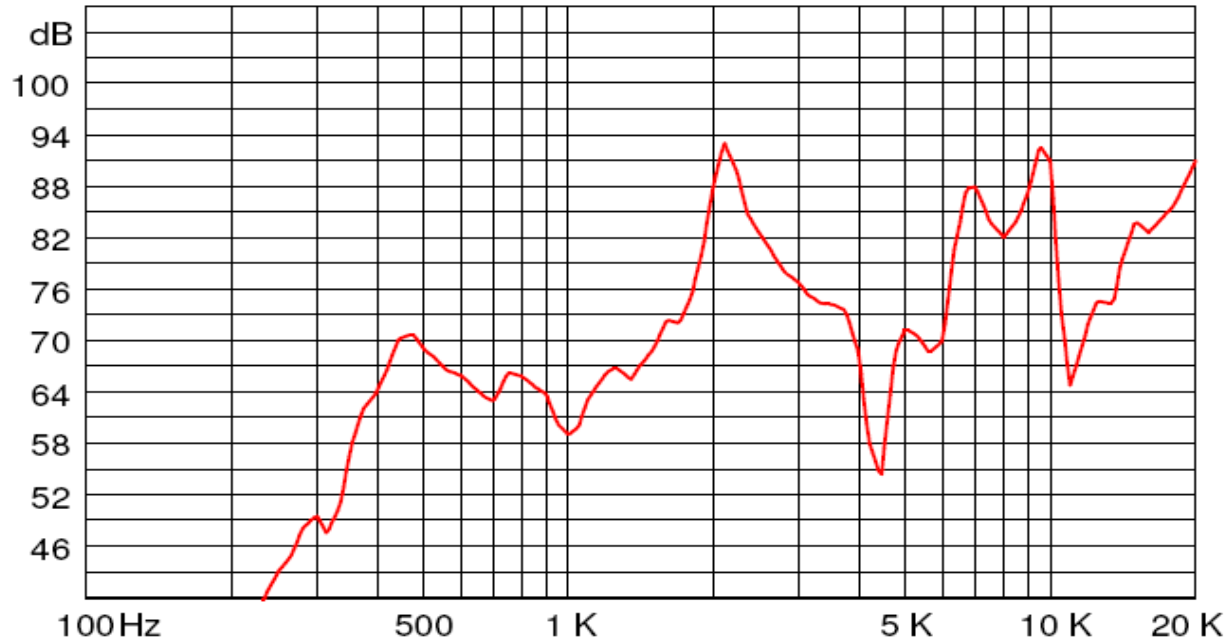

PUI Audio Inc. engages in continuous product improvement. All specifications are subject to change without notice. www.puiaudio.com. Copy

APS4812B-LW100-R
48mm Piezo Speaker

Mechanical and Environment Testing	
Test Description	**Test Condition**
High Temperature	70°C with random humidity for 240 hours
Low Temperature	-20°C with random humidity for 240 hours
Humidity	40°C with 90% to 95% relative humidity for 240 hours
Vibration	1.5 mm movement modulated at 10 to 55 Hz for 2 hours
Drop Test	75 cm free fall onto 40 mm thick board, 10 cycles
Temperature Cycle Test	-20°C to 70°C, 5 cycles (refer to Temperature Cycle Test Graph)
After 4 hours at rest, resonant frequency shall be ±10% of original value with capacitance ±20% of original value.	

Temperature Cycle Test Graph

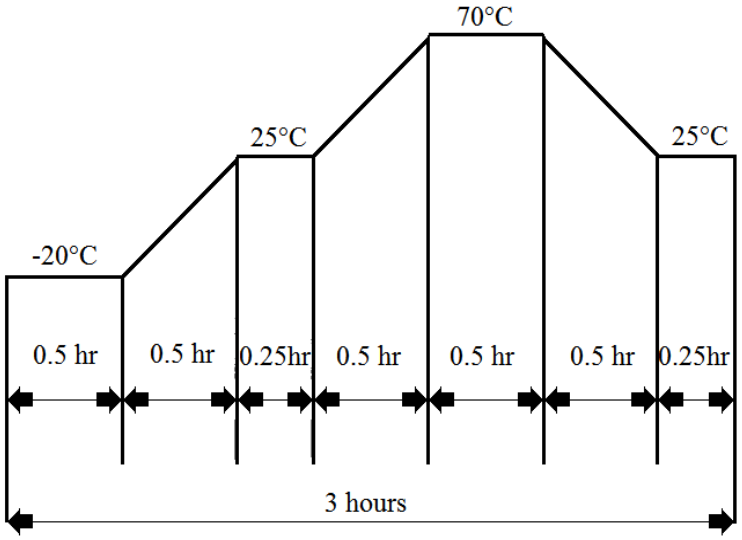

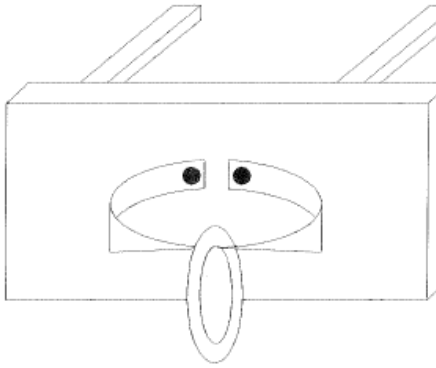

The piezo ceramic diaphragm shall be clamped at a nodal
above and be free from any mechanical stress. The reson
impedance is measured using sine sweep analysis. The re
where the impedance shows minimum value; this shall al
impedance.

Capacitance is measured at 120 Hz using an LCR meter su
HP49194A.

PUI Audio Inc. engages in continuous product improvement. All specifications are subject to change without notice. www.puiaudio.com. Copy

SPECIFICATIONS

PARAMETERS	VALUES	UNIT
OPERATING VOLTAGE (MAX)	30	Vp-p
CAPACITANCE @ 1kHZ	65,000 ± 30%	pF
RESONANT FREQUENCY	1,200 ± 200	Hz
RESONANT IMPEDANCE(MAX)@1Khz	3,500 ± 10%	Ohm
OPERATING TEMPERATURE	-20 ~ +70	°C
STORAGE TEMPERATURE	-20 ~ +70	°C
PLATE MATERIAL	BRASS	-
HOUSING MATERIAL	ABS	-
TERMINAL MATERIAL	LEAD WIRE	-
WEIGHT	3	grams

THIS DOCUMENT CONTAINS DATA PROPRIETARY TO PROJECTS UNLIMITED, INC. ANY USE OR REPRODUCTION, IN ANY FORM, WITHOUT PRIOR WRITTEN PERMISSION OF PROJECTS UNLIMITED, INC. IS PROHIBITED.
©2003, Projects Unlimited Inc.

REVISION HIST

LTR	DESCRIPTION
-	RELEASED FROM ENGINEERING
A	REVISED TO INVENTOR 3-D DRAWING TEM

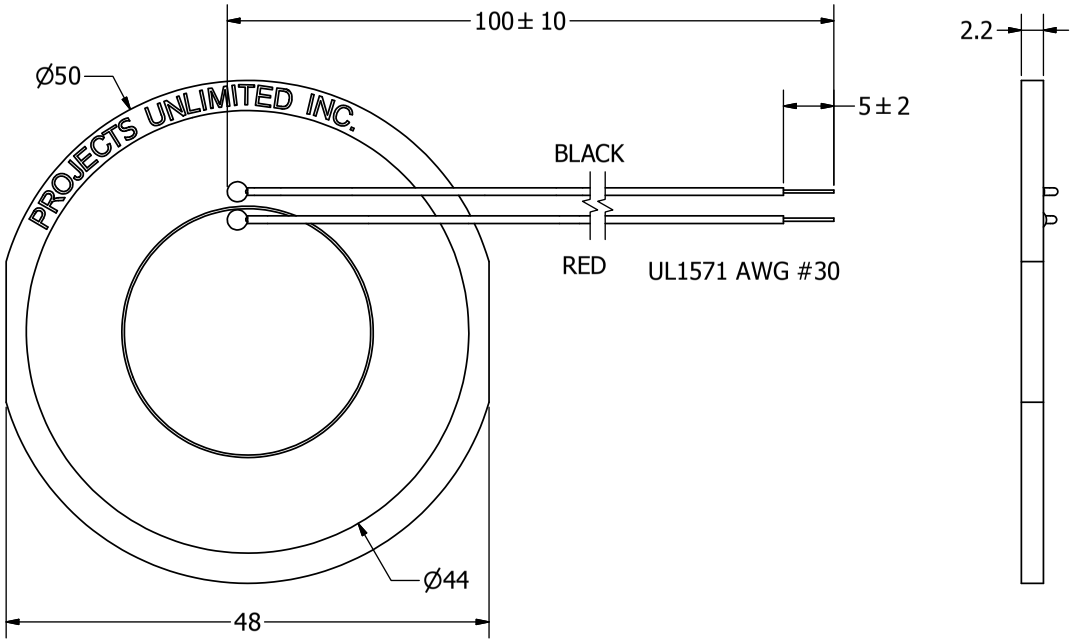

NOTES:

1. ALL DIMENSIONS ARE IN MILLIMETERS.
2. SPECIFICATIONS SUBJECT TO CHANGE OR WITHDRAWL WITHOUT NOTICE.
3. THIS PART IS RoHS 2002/95/EC COMPLIANT.

UNLESS OTHERWISE SPECIFIED: DIMENSIONS ARE IN MILLIMETERS, TOLERANCES ARE ±0.5 AND ANGLES ARE ±3°.	SIZE	Designed by	Date	Checked by	Dat
	A3	J.D.	9/6/2006	B.R.	9/6/2
APS4812B-LW100-R.idw		pui audio inc a projects unlimited company		APS	
				PIEZ	

Looking for pricing, stock, or lifecycle information?

Click below to explore more details on WIN SOURCE:

- View APS4812B-LW100-R on WIN SOURCE
- PUI Audio, Inc. Information

Optimize Your Supply Chain with WIN SOURCE Solutions

- Global Sourcing Solution
- Obsolete Management
- Cost Control Management
- Shortage Management
- Alternative Solution
- Excess Inventory Management