THE DATASHEET OF

MAX13089ECSD+

www.win-source.net 0086-755-83957316

MAX13080E–MAX13084E/ MAX13086E–MAX13089E

+5.0V, ±15kV ESD-Protected, Fail-Safe, Hot-Swap, RS-485/RS-422 Transceivers

General Description

The MAX13080E–MAX13089E +5.0V, ±15kV ESD-protected, RS-485/RS-422 transceivers feature one driver and one receiver. These devices include fail-safe circuitry, guaranteeing a logic-high receiver output when receiver inputs are open or shorted. The receiver outputs a logic-high if all transmitters on a terminated bus are disabled (high impedance). The MAX13080E family include a hot-swap capability to eliminate false transitions on the bus during power-up or hot insertion.

The MAX13080E/MAX13081E/MAX13082E feature reduced slew-rate drivers that minimize EMI and reduce reflections caused by improperly terminated cables, allowing error-free data transmission up to 250kbps. The MAX13083E/MAX13084E also feature slew-rate-limited drivers but allow transmit speeds up to 500kbps. The MAX13086E/MAX13087E/ MAX13088E driver slew rates are not limited, making transmit speeds up to 16Mbps possible. The MAX13089E slew rate is pin selectable for 250kbps, 500kbps, and 16Mbps.

The MAX13082E/MAX13088E are intended for half-duplex communications, and the MAX13080E/ MAX13081E/MAX13083E/MAX13084E/MAX13086E/ MAX13087E are intended for full-duplex communications. The MAX13089E is selectable for half-duplex or full-duplex operation. It also features independently programmable receiver and transmitter output phase through separate pins.

The MAX13080E family transceivers draw 1.2mA of supply current when unloaded or when fully loaded with the drivers disabled. All devices have a 1/8-unit load receiver input impedance, allowing up to 256 transceivers on the bus.

The MAX13080E/MAX13083E/MAX13086E/MAX13089E are available in 14-pin PDIP and 14-pin SO packages. The MAX13081E/MAX13082E/MAX13084E/MAX13087E/ MAX13088E are available in 8-pin PDIP and 8-pin SO packages. The devices operate over the commercial, extended, and automotive temperature ranges.

Applications

Utility Meters

Lighting Systems

Industrial Control

Telecom

Security Systems

Instrumentation

Profibus

Features

- **+5.0V Operation**
- **Extended ESD Protection for RS-485/RS-422 I/O Pins ±15kV Human Body Model**
- **True Fail-Safe Receiver While Maintaining EIA/TIA-485 Compatibility**
- **Hot-Swap Input Structures on DE and $\overline{RE}$**
- **Enhanced Slew-Rate Limiting Facilitates Error-Free Data Transmission (MAX13080E–MAX13084E/MAX13089E)**
- **Low-Current Shutdown Mode (Except MAX13081E/MAX13084E/MAX13087E)**
- **Pin-Selectable Full-/Half-Duplex Operation (MAX13089E)**
- **Phase Controls to Correct for Twisted-Pair Reversal (MAX13089E)**
- **Allow Up to 256 Transceivers on the Bus**
- **Available in Industry-Standard 8-Pin SO Package**

Ordering Information

PART	TEMP RANGE	PIN-PACKAGE
MAX13080ECPD+	0°C to +70°C	14 PDIP
MAX13080ECSD+	0°C to +70°C	14 SO
MAX13080EEPD+	-40°C to +85°C	14 PDIP
MAX13080EESD+	-40°C to +85°C	14 SO
MAX13080EAPD+	-40°C to +125°C	14 PDIP
MAX13080EASD+	-40°C to +125°C	14 SO

+Denotes a lead(Pb)-free/RoHS-compliant package.

Ordering Information continued at end of data sheet.

Selector Guide, Pin Configurations, and Typical Operating Circuits appear at end of data sheet.

For pricing, delivery, and ordering information, please contact Maxim Direct at 1-888-629-4642, or visit Maxim's website at www.maximintegrated.com.

19-3590; Rev 2; 11/11

ABSOLUTE MAXIMUM RATINGS

(All Voltages Referenced to GND)
Supply Voltage (V_{CC}).....+6V
Control Input Voltage ($\overline{RE}$, DE, SLR, H/$\overline{F}$, TXP, RXP).....-0.3V to +6V
Driver Input Voltage (DI).....-0.3V to +6V
Driver Output Voltage (Z, Y, A, B) .....-8V to +13V
Receiver Input Voltage (A, B).....-8V to +13V
Receiver Input Voltage Full Duplex (A, B) .....-8V to +13V
Receiver Output Voltage (RO).....-0.3V to (V_{CC} + 0.3V)
Driver Output Current .....±250mA

Continuous Power Dissipation (T_A = +70°C)
8-Pin SO (derate 5.88mW/°C above +70°C) 471mW
8-Pin Plastic DIP (derate 9.09mW/°C above +70°C) 727mW
14-Pin SO (derate 8.33mW/°C above +70°C) 667mW
14-Pin Plastic DIP (derate 10.0mW/°C above +70°C) ...800mW
Operating Temperature Ranges
MAX1308_EC_ _ .....0°C to +75°C
MAX1308_EE_ _ .....-40°C to +85°C
MAX1308_EA_ _ .....-40°C to +125°C
Junction Temperature .....+150°C
Storage Temperature Range .....-65°C to +150°C
Lead Temperature (soldering, 10s) .....+300°C
Soldering Temperature (reflow) .....+260°C

Stresses beyond those listed under "Absolute Maximum Ratings" may cause permanent damage to the device. These are stress ratings only, and functional operation of the device at these or any other conditions beyond those indicated in the operational sections of the specifications is not implied. Exposure to absolute maximum rating conditions for extended periods may affect device reliability.

DC ELECTRICAL CHARACTERISTICS

(V_{CC} = +5.0V ±10%, T_A = T_{MIN} to T_{MAX}, unless otherwise noted. Typical values are at V_{CC} = +5.0V and T_A = +25°C.) (Note 1)

PARAMETER	SYMBOL	CONDITIONS		MIN	TYP	MAX	UNITS
DRIVER							
V_{CC} Supply-Voltage Range	V_{CC}			4.5		5.5	V
Differential Driver Output	V_{OD}	R_L = 100Ω (RS-422), Figure 1		3		V_{CC}	V
		R_L = 54Ω (RS-485), Figure 1		2		V_{CC}	
		No load				V_{CC}	
Change in Magnitude of Differential Output Voltage	ΔV_{OD}	R_L = 100Ω or 54Ω, Figure 1 (Note 2)				0.2	V
Driver Common-Mode Output Voltage	V_{OC}	R_L = 100Ω or 54Ω, Figure 1			V_{CC} / 2	3	V
Change in Magnitude of Common-Mode Voltage	ΔV_{OC}	R_L = 100Ω or 54Ω, Figure 1 (Note 2)				0.2	V
Input-High Voltage	V_{IH}	DE, DI, $\overline{RE}$, TXP, RXP, H/$\overline{F}$		3			V
Input-Low Voltage	V_{IL}	DE, DI, $\overline{RE}$, TXP, RXP, H/$\overline{F}$				0.8	V
Input Hysteresis	V_{HYS}	DE, DI, $\overline{RE}$, TXP, RXP, H/$\overline{F}$			100		mV
Input Current	I_{IN1}	DE, DI, $\overline{RE}$				±1	µA
Input Impedance First Transition		DE		1		10	kΩ
Input Current	I_{IN2}	TXP, RXP, H/$\overline{F}$ internal pulldown		10		40	µA
SRL Input-High Voltage				V_{CC} - 0.4			V
SRL Input-Middle Voltage				V_{CC} x 0.3		V_{CC} x 0.7	V
SRL Input-Low Voltage						0.4	V
SRL Input Current		SRL = V_{CC}				75	µA
		SRL = GND		-75			
Output Leakage (Y and Z) Full Duplex	I_O	DE = GND, V_{CC} = GND or V_{CC}	V_{IN} = +12V			125	µA
			V_{IN} = -7V	-100			

DC ELECTRICAL CHARACTERISTICS (continued)

(V_{CC} = +5.0V ±10%, T_A = T_{MIN} to T_{MAX}, unless otherwise noted. Typical values are at V_{CC} = +5.0V and T_A = +25°C.) (Note 1)

PARAMETER	SYMBOL	CONDITIONS		MIN	TYP	MAX	UNITS
Driver Short-Circuit Output Current	I_{OSD}	0 ≤ V_{OUT} ≤ +12V (Note 3)		40		250	mA
		-7V ≤ V_{OUT} ≤ V_{CC} (Note 3)		-250		-40	
		0 ≤ V_{OUT} ≤ +12V, +85°C ≤ T_A ≤ +125°C (Note 3)		40		270	
		-7V ≤ V_{OUT} ≤ V_{CC}, +85°C ≤ T_A ≤ +125°C (Note 3)		-270		-40	
Driver Short-Circuit Foldback Output Current	I_{OSDF}	(V_{CC} - 1V) ≤ V_{OUT} ≤ +12V (Note 3)		20			mA
		-7V ≤ V_{OUT} ≤ +1V (Note 3)				-20	
Thermal-Shutdown Threshold	T_{TS}				175		°C
Thermal-Shutdown Hysteresis	T_{TSH}				15		°C
Input Current (A and B)	$I_{A, B}$	DE = GND, V_{CC} = GND or V_{CC}	V_{IN} = +12V			125	µA
			V_{IN} = -7V	-100			
RECEIVER							
Receiver Differential Threshold Voltage	V_{TH}	-7V ≤ V_{CM} ≤ +12V		-200	-125	-50	mV
Receiver Input Hysteresis	ΔV_{TH}	V_A + V_B = 0V			15		mV
RO Output-High Voltage	V_{OH}	I_O = -1mA		V_{CC} - 0.6			V
RO Output-Low Voltage	V_{OL}	I_O = 1mA				0.4	V
Three-State Output Current at Receiver	I_{OZR}	0 ≤ V_O ≤ V_{CC}				± 1	µA
Receiver Input Resistance	R_{IN}	-7V ≤ V_{CM} ≤ +12V		96			kΩ
Receiver Output Short-Circuit Current	I_{OSR}	0V ≤ V_{RO} ≤ V_{CC}				±110	mA
SUPPLY CURRENT							
Supply Current	I_{CC}	No load, $\overline{RE}$ = 0, DE = V_{CC}			1.2	1.8	mA
		No load, $\overline{RE}$ = V_{CC}, DE = V_{CC}			1.2	1.8	
		No load, $\overline{RE}$ = 0, DE = 0			1.2	1.8	
Supply Current in Shutdown Mode	I_{SHDN}	$\overline{RE}$ = V_{CC}, DE = GND			2.8	10	µA
ESD PROTECTION							
ESD Protection for Y, Z, A, and B		Human Body Model			±15		kV
		Contact Discharge IEC 61000-4-2			±6		kV

DRIVER SWITCHING CHARACTERISTICS
MAX13080E/MAX13081E/MAX13082E/MAX13089E WITH SRL = UNCONNECTED (250kbps)

(V_{CC} = +5.0V ±10%, T_A = T_{MIN} to T_{MAX}, unless otherwise noted. Typical values are at V_{CC} = +5.0V and T_A = +25°C.)

PARAMETER	SYMBOL	CONDITIONS	MIN	TYP	MAX	UNITS
Driver Propagation Delay	t_{DPLH}	C_L= 50pF, R_L= 54Ω, Figures 2 and 3	350		1800	ns
	t_{DPHL}		350		1800	
Driver Differential Output Rise or Fall Time	t_R , t_F	C_L= 50pF, R_L= 54Ω, Figures 2 and 3	400		1900	ns
Differential Driver Output Skew $\lvert t_{DPLH} - t_{DPHL} \rvert$	t_{DSKEW}	C_L= 50pF, R_L= 54Ω, Figures 2 and 3			250	ns
Maximum Data Rate			250			kbps
Driver Enable to Output High	t_{DZH}	Figure 4			2500	ns
Driver Enable to Output Low	t_{DZL}	Figure 5			2500	ns
Driver Disable Time from Low	t_{DLZ}	Figure 5			100	ns
Driver Disable Time from High	t_{DHZ}	Figure 4			100	ns
Driver Enable from Shutdown to Output High	$t_{DZH(SHDN)}$	Figure 4			5500	ns
Driver Enable from Shutdown to Output Low	$t_{DZL(SHDN)}$	Figure 5			5500	ns
Time to Shutdown	t_{SHDN}		50	340	700	ns

RECEIVER SWITCHING CHARACTERISTICS
MAX13080E/MAX13081E/MAX13082E/MAX13089E WITH SRL = UNCONNECTED (250kbps)

(V_{CC} = +5.0V ±10%, T_A = T_{MIN} to T_{MAX}, unless otherwise noted. Typical values are at V_{CC} = +5.0V and T_A = +25°C.)

PARAMETER	SYMBOL	CONDITIONS	MIN	TYP	MAX	UNITS
Receiver Propagation Delay	t_{RPLH}	C_L = 15pF, Figures 6 and 7			200	ns
	t_{RPHL}				200	
Receiver Output Skew $\lvert t_{RPLH} - t_{RPHL} \rvert$	t_{RSKEW}	C_L = 15pF, Figures 6 and 7			30	ns
Maximum Data Rate			250			kbps
Receiver Enable to Output Low	t_{RZL}	Figure 8			50	ns
Receiver Enable to Output High	t_{RZH}	Figure 8			50	ns
Receiver Disable Time from Low	t_{RLZ}	Figure 8			50	ns
Receiver Disable Time from High	t_{RHZ}	Figure 8			50	ns
Receiver Enable from Shutdown to Output High	$t_{RZH(SHDN)}$	Figure 8			5500	ns
Receiver Enable from Shutdown to Output Low	$t_{RZL(SHDN)}$	Figure 8			5500	ns
Time to Shutdown	t_{SHDN}		50	340	700	ns

DRIVER SWITCHING CHARACTERISTICS
MAX13083E/MAX13084E/MAX13089E WITH SRL = V_{CC} (500kbps)

(V_{CC} = +5.0V ±10%, T_A = T_{MIN} to T_{MAX}, unless otherwise noted. Typical values are at V_{CC} = +5.0V and T_A = +25°C.)

PARAMETER	SYMBOL	CONDITIONS	MIN	TYP	MAX	UNITS
Driver Propagation Delay	t_{DPLH}	C_L = 50pF, R_L = 54Ω, Figures 2 and 3	200		1000	ns
	t_{DPHL}		200		1000	
Driver Differential Output Rise or Fall Time	t_R , t_F	C_L = 50pF, R_L = 54Ω, Figures 2 and 3	250		900	ns
Differential Driver Output Skew $\lvert t_{DPLH} - t_{DPHL} \rvert$	t_{DSKEW}	C_L = 50pF, R_L = 54Ω, Figures 2 and 3			140	ns
Maximum Data Rate			500			kbps
Driver Enable to Output High	t_{DZH}	Figure 4			2500	ns
Driver Enable to Output Low	t_{DZL}	Figure 5			2500	ns
Driver Disable Time from Low	t_{DLZ}	Figure 5			100	ns
Driver Disable Time from High	t_{DHZ}	Figure 4			100	ns
Driver Enable from Shutdown to Output High	$t_{DZH(SHDN)}$	Figure 4			5500	ns
Driver Enable from Shutdown to Output Low	$t_{DZL(SHDN)}$	Figure 5			5500	ns
Time to Shutdown	t_{SHDN}		50	340	700	ns

RECEIVER SWITCHING CHARACTERISTICS
MAX13083E/MAX13084E/MAX13089E WITH SRL = V_{CC} (500kbps)

(V_{CC} = +5.0V ±10%, T_A = T_{MIN} to T_{MAX}, unless otherwise noted. Typical values are at V_{CC} = +5.0V and T_A = +25°C.)

PARAMETER	SYMBOL	CONDITIONS	MIN	TYP	MAX	UNITS
Receiver Propagation Delay	t_{RPLH}	C_L = 15pF, Figures 6 and 7			200	ns
	t_{RPHL}				200	
Receiver Output Skew $\lvert t_{RPLH} - t_{RPHL} \rvert$	t_{RSKEW}	C_L = 15pF, Figures 6 and 7			30	ns
Maximum Data Rate			500			kbps
Receiver Enable to Output Low	t_{RZL}	Figure 8			50	ns
Receiver Enable to Output High	t_{RZH}	Figure 8			50	ns
Receiver Disable Time from Low	t_{RLZ}	Figure 8			50	ns
Receiver Disable Time from High	t_{RHZ}	Figure 8			50	ns
Receiver Enable from Shutdown to Output High	$t_{RZH(SHDN)}$	Figure 8			5500	ns
Receiver Enable from Shutdown to Output Low	$t_{RZL(SHDN)}$	Figure 8			5500	ns
Time to Shutdown	t_{SHDN}		50	340	700	ns

DRIVER SWITCHING CHARACTERISTICS
MAX13086E/MAX13087E/MAX13088E/MAX13089E WITH SRL = GND (16Mbps)

(V_{CC} = +5.0V ±10%, T_A = T_{MIN} to T_{MAX}, unless otherwise noted. Typical values are at V_{CC} = +5.0V and T_A = +25°C.)

PARAMETER	SYMBOL	CONDITIONS	MIN	TYP	MAX	UNITS
Driver Propagation Delay	t_{DPLH}	C_L = 50pF, R_L= 54Ω, Figures 2 and 3			50	ns
	t_{DPHL}				50	
Driver Differential Output Rise or Fall Time	t_R , t_F	C_L = 50pF, R_L= 54Ω, Figures 2 and 3			15	ns
Differential Driver Output Skew $\lvert t_{DPLH} - t_{DPHL} \rvert$	t_{DSKEW}	C_L = 50pF, R_L= 54Ω, Figures 2 and 3			8	ns
Maximum Data Rate			16			Mbps
Driver Enable to Output High	t_{DZH}	Figure 4			150	ns
Driver Enable to Output Low	t_{DZL}	Figure 5			150	ns
Driver Disable Time from Low	t_{DLZ}	Figure 5			100	ns
Driver Disable Time from High	t_{DHZ}	Figure 4			100	ns
Driver Enable from Shutdown to Output High	$t_{DZH(SHDN)}$	Figure 4			2200	ns
Driver Enable from Shutdown to Output Low	$t_{DZL(SHDN)}$	Figure 5			2200	ns
Time to Shutdown	t_{SHDN}		50	340	700	ns

RECEIVER SWITCHING CHARACTERISTICS
MAX13086E/MAX13087E/MAX13088E/MAX13089E WITH SRL = GND (16Mbps)

(V_{CC} = +5.0V ±10%, T_A = T_{MIN} to T_{MAX}, unless otherwise noted. Typical values are at V_{CC} = +5.0V and T_A = +25°C.)

PARAMETER	SYMBOL	CONDITIONS	MIN	TYP	MAX	UNITS
Receiver Propagation Delay	t_{RPLH}	C_L = 15pF, Figures 6 and 7		50	80	ns
	t_{RPHL}			50	80	
Receiver Output Skew $\lvert t_{RPLH} - t_{RPHL} \rvert$	t_{RSKEW}	C_L = 15pF, Figures 6 and 7			13	ns
Maximum Data Rate			16			Mbps
Receiver Enable to Output Low	t_{RZL}	Figure 8			50	ns
Receiver Enable to Output High	t_{RZH}	Figure 8			50	ns
Receiver Disable Time from Low	t_{RLZ}	Figure 8			50	ns
Receiver Disable Time from High	t_{RHZ}	Figure 8			50	ns
Receiver Enable from Shutdown to Output High	$t_{RZH(SHDN)}$	Figure 8			2200	ns
Receiver Enable from Shutdown to Output Low	$t_{RZL(SHDN)}$	Figure 8			2200	ns
Time to Shutdown	t_{SHDN}		50	340	700	ns

Note 1: All currents into the device are positive. All currents out of the device are negative. All voltages are referred to device ground, unless otherwise noted.

Note 2: ΔV_{OD} and ΔV_{OC} are the changes in V_{OD} and V_{OC}, respectively, when the DI input changes state.

Note 3: The short-circuit output current applies to peak current just prior to foldback current limiting. The short-circuit foldback output current applies during current limiting to allow a recovery from bus contention.

Typical Operating Characteristics

(V_{CC} = +5.0V, T_A = +25°C, unless otherwise noted.)

SUPPLY CURRENT vs. TEMPERATURE

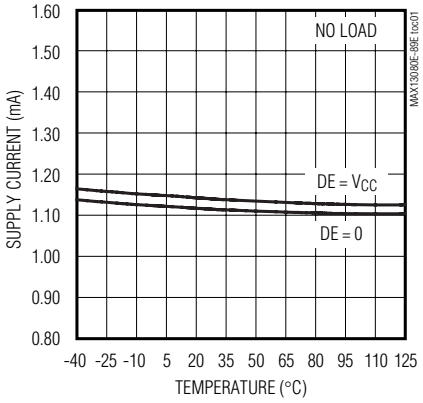

OUTPUT CURRENT vs. RECEIVER OUTPUT-HIGH VOLTAGE

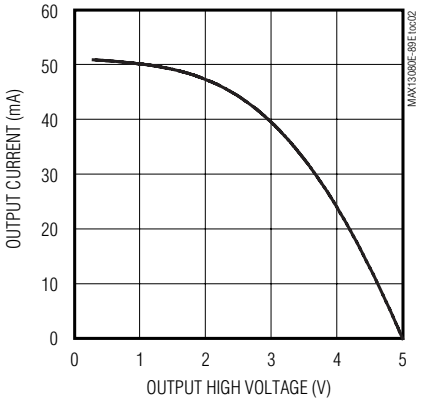

OUTPUT CURRENT vs. RECEIVER OUTPUT-LOW VOLTAGE

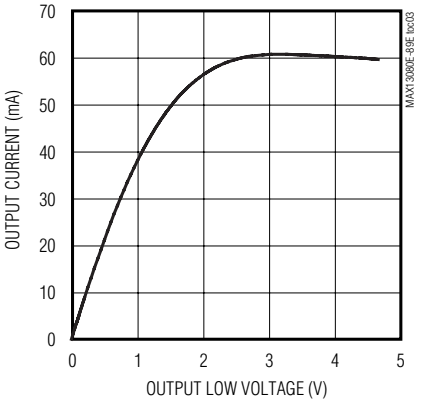

RECEIVER OUTPUT-HIGH VOLTAGE vs. TEMPERATURE

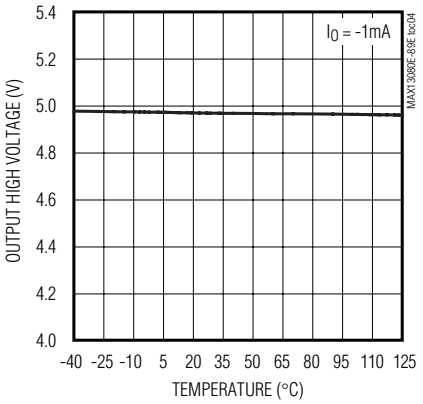

RECEIVER OUTPUT-LOW VOLTAGE vs. TEMPERATURE

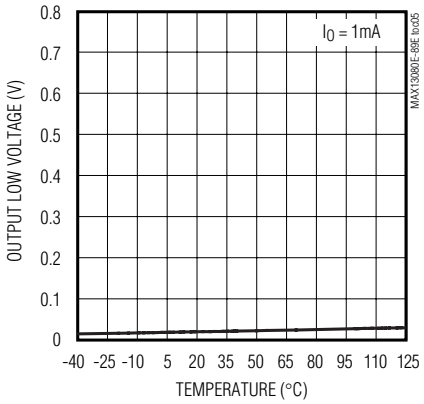

DRIVER DIFFERENTIAL OUTPUT CURRENT vs. DIFFERENTIAL OUTPUT VOLTAGE

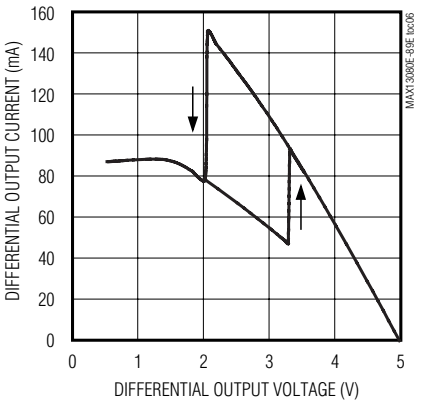

DRIVER DIFFERENTIAL OUTPUT VOLTAGE vs. TEMPERATURE

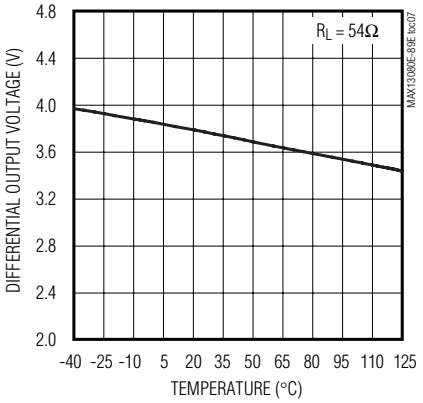

OUTPUT CURRENT vs. TRANSMITTER OUTPUT-HIGH VOLTAGE

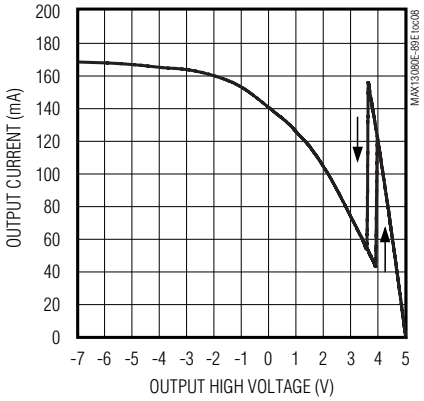

OUTPUT CURRENT vs. TRANSMITTER OUTPUT-LOW VOLTAGE

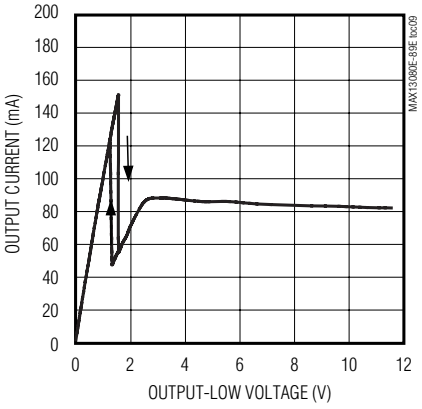

Typical Operating Characteristics (continued)

(V_{CC} = +5.0V, T_A = +25°C, unless otherwise noted.)

SHUTDOWN CURRENT vs. TEMPERATURE

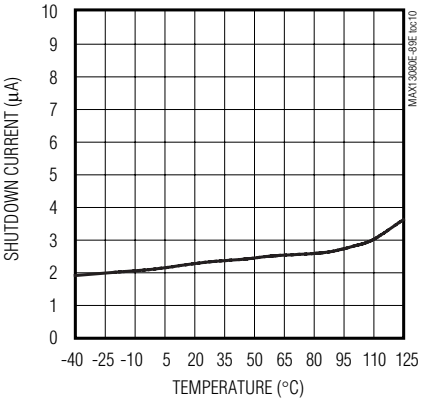

DRIVER PROPAGATION DELAY vs. TEMPERATURE (250kbps)

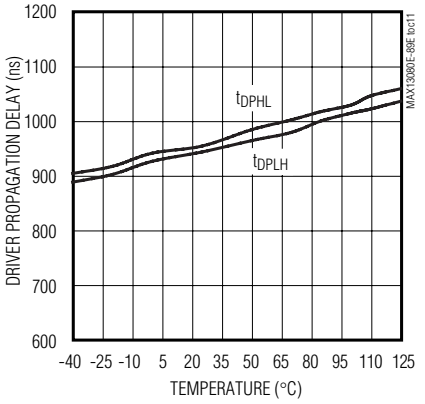

DRIVER PROPAGATION DELAY vs. TEMPERATURE (500kbps)

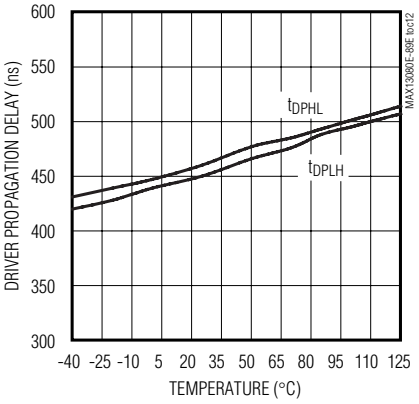

DRIVER PROPAGATION DELAY vs. TEMPERATURE (16Mbps)

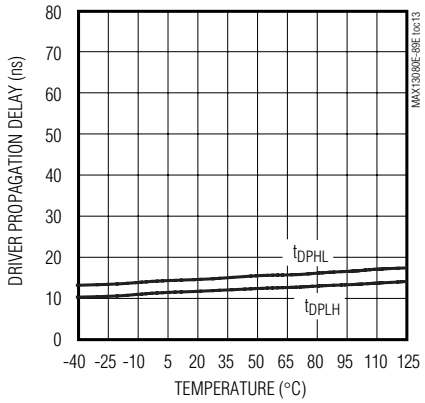

RECEIVER PROPAGATION DELAY vs. TEMPERATURE (250kpbs AND 500kbps)

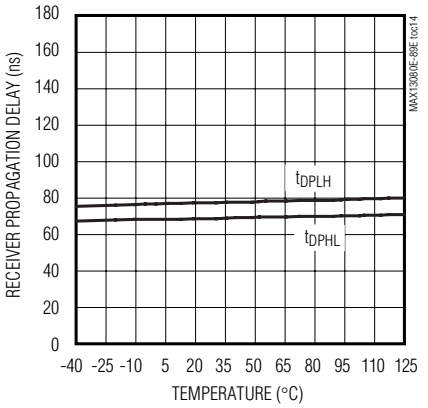

RECEIVER PROPAGATION DELAY vs. TEMPERATURE (16Mbps)

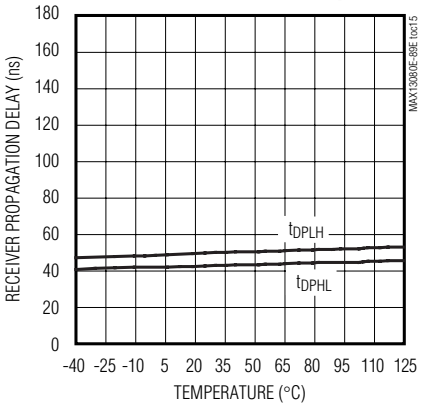

DRIVER PROPAGATION DELAY (250kbps)

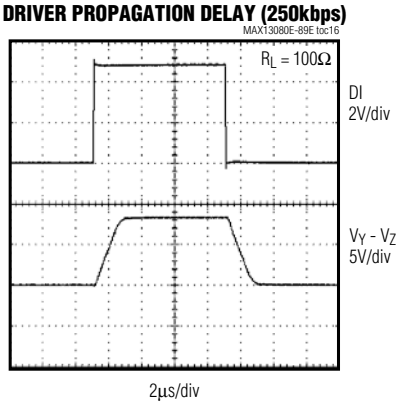

RECEIVER PROPAGATION DELAY (250kbps AND 500kbps)

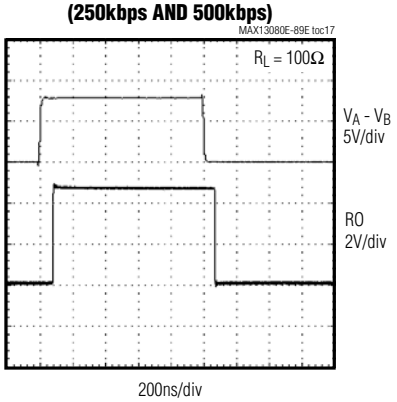

Typical Operating Characteristics (continued)

(V_{CC} = +5.0V, T_A = +25°C, unless otherwise noted.)

DRIVER PROPAGATION DELAY (500kbps)

MAX13080E-89E toc18

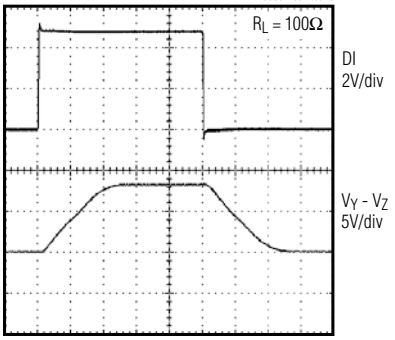

DRIVER PROPAGATION DELAY (16Mbps)

MAX13080E-89E toc19

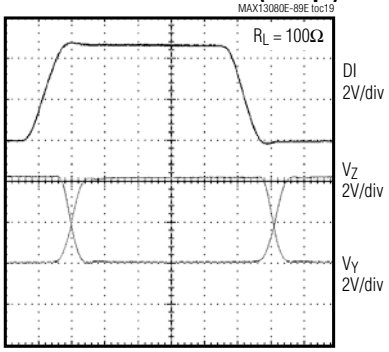

RECEIVER PROPAGATION DELAY (16Mbps)

MAX13080E-89E toc20

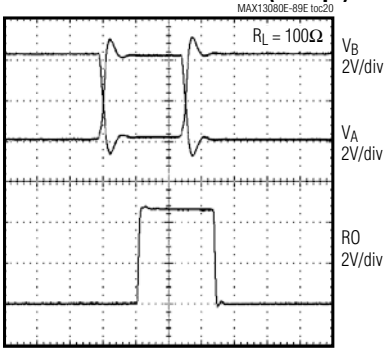

Test Circuits and Waveforms

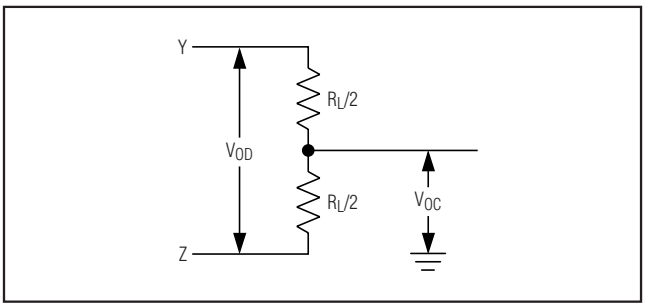

Figure 1. Driver DC Test Load

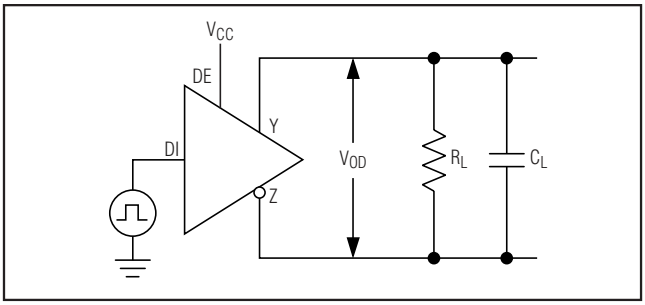

Figure 2. Driver Timing Test Circuit

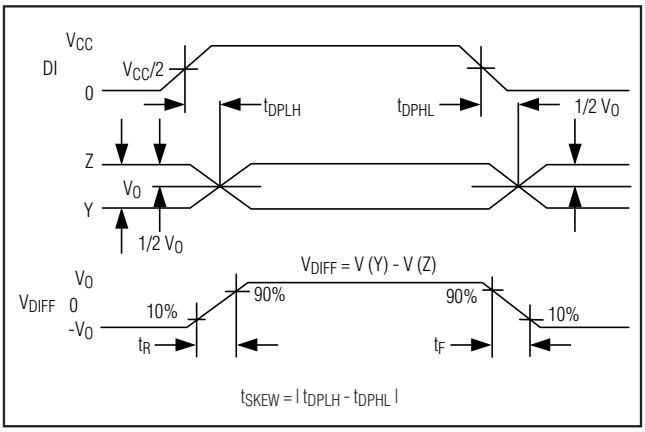

Figure 3. Driver Propagation Delays

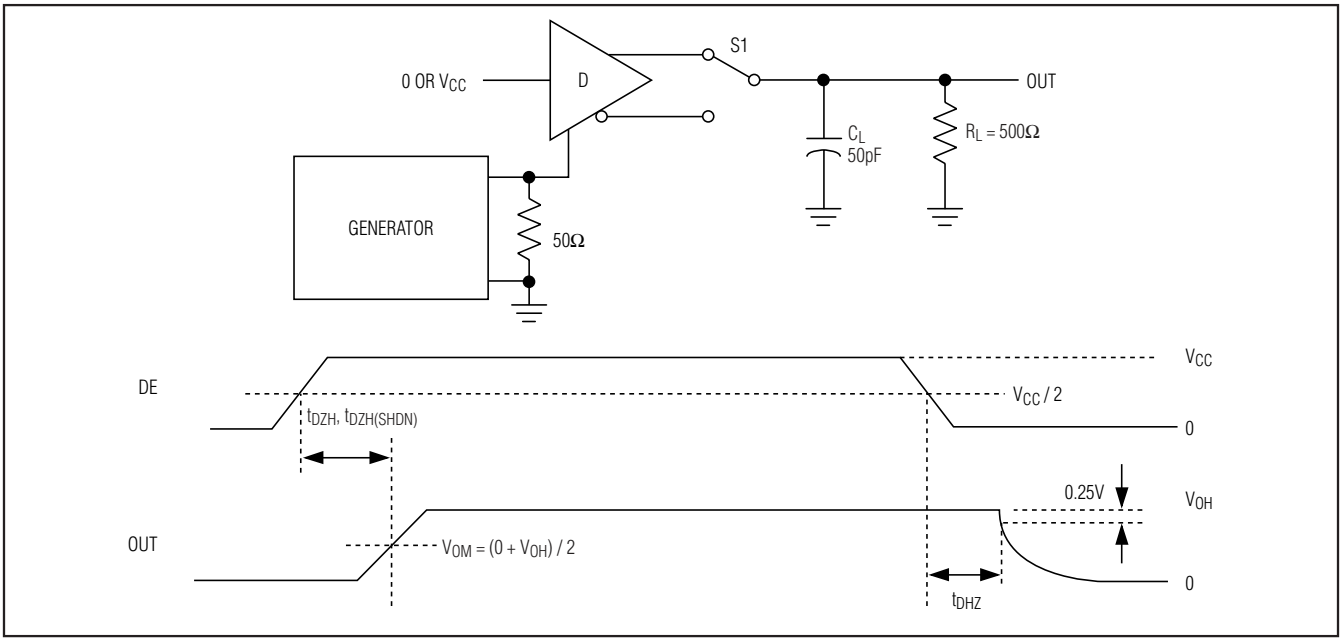

Figure 4. Driver Enable and Disable Times (t_{DHZ}, t_{DZH}, $t_{DZH(SHDN)}$)

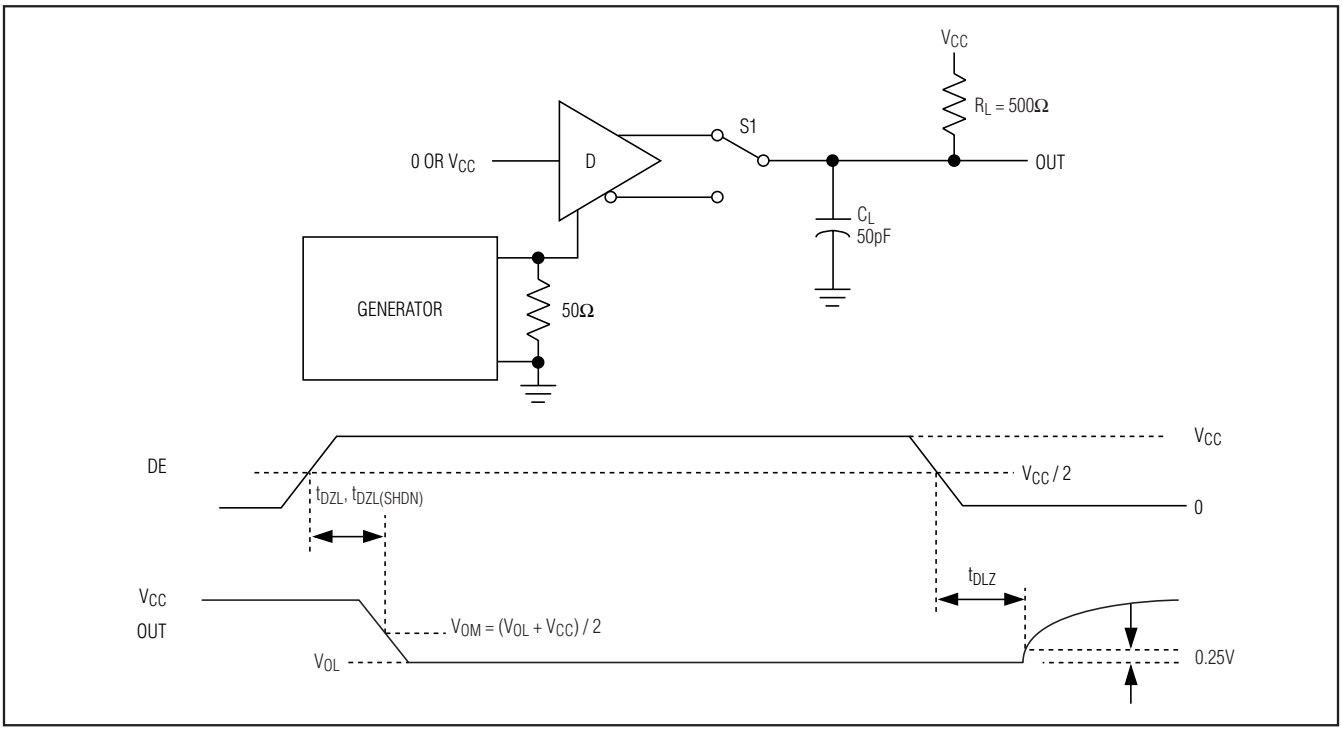

Figure 5. Driver Enable and Disable Times (t_{DZL}, t_{DLZ}, $t_{DLZ(SHDN)}$)

Test Circuits and Waveforms (continued)

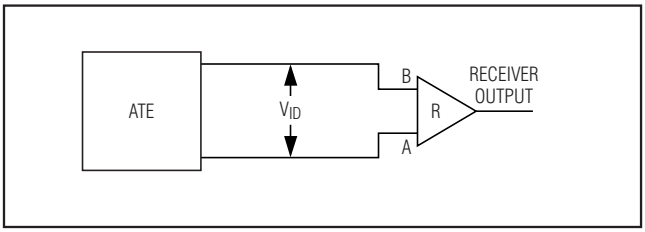

Figure 6. Receiver Propagation Delay Test Circuit

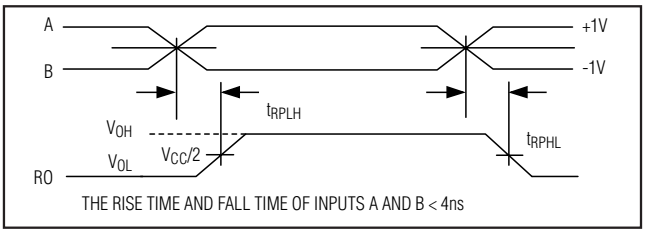

Figure 7. Receiver Propagation Delays

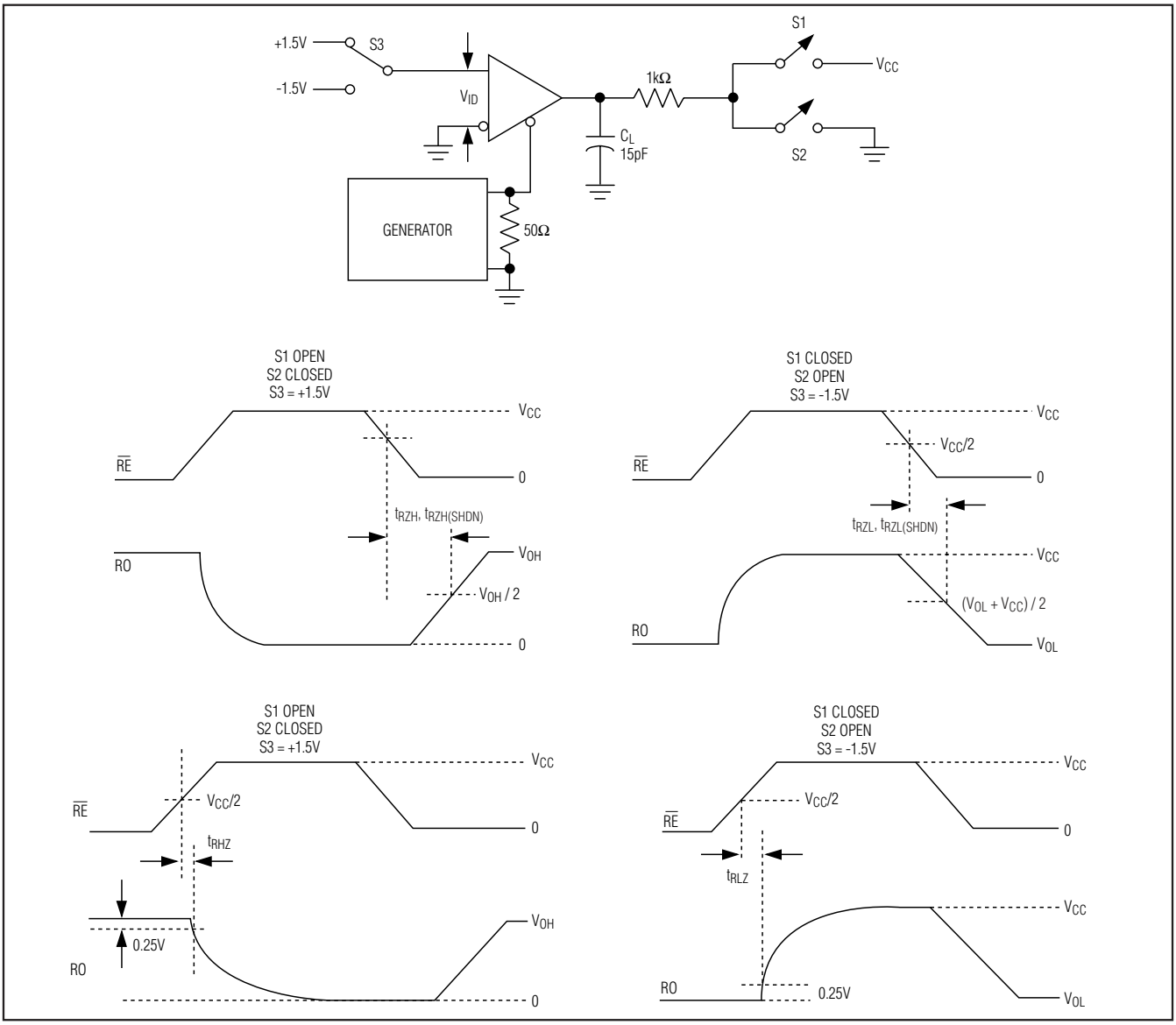

Figure 8. Receiver Enable and Disable Times

Pin Description

PIN					NAME	FUNCTION
MAX13080E MAX13083E MAX13086E	MAX13081E MAX13084E MAX13087E	MAX13082E MAX13088E	MAX13089E			
FULL-DUPLEX DEVICES		HALF-DUPLEX DEVICES	FULL-DUPLEX MODE	HALF-DUPLEX MODE		
1, 8, 13	—	—	—	—	N.C.	No Connect. Not internally connected, can be connected to GND.
—	—	—	1	1	H/$\overline{F}$	Half-/Full-Duplex Select Input. Connect H/$\overline{F}$ to V_{CC} for half-duplex mode; connect H/$\overline{F}$ to GND or leave unconnected for full-duplex mode.
2	2	1	2	2	RO	Receiver Output. When $\overline{RE}$ is low and if (A - B) ≥ -50mV, RO is high; if (A - B) ≤ -200mV, RO is low.
3	—	2	3	3	$\overline{RE}$	Receiver Output Enable. Drive $\overline{RE}$ low to enable RO; RO is high impedance when $\overline{RE}$ is high. Drive $\overline{RE}$ high and DE low to enter low-power shutdown mode. $\overline{RE}$ is a hot-swap input (see the *Hot-Swap Capability* section for details).
4	—	3	4	4	DE	Driver Output Enable. Drive DE high to enable driver outputs. These outputs are high impedance when DE is low. Drive $\overline{RE}$ high and DE low to enter low-power shutdown mode. DE is a hot-swap input (see the *Hot-Swap Capability* section for details).
5	3	4	5	5	DI	Driver Input. With DE high, a low on DI forces noninverting output low and inverting output high. Similarly, a high on DI forces noninverting output high and inverting output low.
—	—	—	6	6	SRL	Slew-Rate Limit Selector Input. Connect SRL to ground for 16Mbps communication rate; connect SRL to V_{CC} for 500kbps communication rate. Leave SRL unconnected for 250kbps communication rate.
6, 7	4	5	7	7	GND	Ground
—	—	—	8	8	TXP	Transmitter Phase. Connect TXP to ground or leave TXP unconnected for normal transmitter phase/polarity. Connect TXP to V_{CC} to invert the transmitter phase/polarity.
9	5	—	9	—	Y	Noninverting Driver Output
—	—	—	—	9	Y	Noninverting Driver Output and Noninverting Receiver Input*
10	6	—	10	—	Z	Inverting Driver Output
—	—	—	—	10	Z	Inverting Driver Output and Inverting Receiver Input*
11	7	—	11	—	B	Inverting Receiver Input
—	—	—	—	11	B	Receiver Input Resistors*
—	—	7	—	—	B	Inverting Receiver Input and Inverting Driver Output

Pin Description (continued)

PIN					NAME	FUNCTION
MAX13080E MAX13083E MAX13086E	MAX13081E MAX13084E MAX13087E	MAX13082E MAX13088E	MAX13089E			
FULL-DUPLEX DEVICES		HALF-DUPLEX DEVICES	FULL-DUPLEX MODE	HALF-DUPLEX MODE		
12	8	—	12	—	A	Noninverting Receiver Input
—	—	—	—	12	A	Receiver Input Resistors*
—	—	6	—	—	A	Noninverting Receiver Input and Noninverting Driver Output
—	—	—	13	13	RXP	Receiver Phase. Connect RXP to GND or leave RXP unconnected for normal transmitter phase/polarity. Connect RXP to V_{CC} to invert receiver phase/polarity.
14	1	8	14	14	V_{CC}	Positive Supply V_{CC} = +5.0V ±10%. Bypass V_{CC} to GND with a 0.1µF capacitor.

**MAX13089E only. In half-duplex mode, the driver outputs serve as receiver inputs. The full-duplex receiver inputs (A and B) still have a 1/8-unit load (96kΩ), but are not connected to the receiver.*

Function Tables

MAX13080E/MAX13083E/MAX13086E

TRANSMITTING				
INPUTS			OUTPUTS	
$\overline{RE}$	DE	DI	Z	Y
X	1	1	0	1
X	1	0	1	0
0	0	X	High-Z	High-Z
1	0	X	Shutdown	

RECEIVING			
INPUTS			OUTPUT
$\overline{RE}$	DE	A, B	RO
0	X	≥ -50mV	1
0	X	≤ -200mV	0
0	X	Open/ shorted	1
1	1	X	High-Z
1	0	X	Shutdown

MAX13081E/MAX13084E/MAX13086E/ MAX13087E

TRANSMITTING		
INPUT	OUTPUTS	
DI	Z	Y
1	0	1
0	1	0

RECEIVING	
INPUTS	OUTPUT
A, B	RO
≥ -50mV	1
≤ -200mV	0
Open/shorted	1

Function Tables (continued)

MAX13082E/MAX13088E

TRANSMITTING				
INPUTS			OUTPUTS	
$\overline{RE}$	DE	DI	B/Z	A/Y
X	1	1	0	1
X	1	0	1	0
0	0	X	High-Z	High-Z
1	0	X	Shutdown	

RECEIVING			
INPUTS			OUTPUTS
$\overline{RE}$	DE	A-B	RO
0	X	≥ -50mV	1
0	X	≤ -200mV	0
0	X	Open/ shorted	1
1	1	X	High-Z
1	0	X	Shutdown

MAX13089E

TRANSMITTING					
INPUTS				OUTPUTS	
TXP	$\overline{RE}$	DE	DI	Z	Y
0	X	1	1	0	1
0	X	1	0	1	0
1	X	1	1	1	0
1	X	1	0	0	1
X	0	0	X	High-Z	High-Z
X	1	0	X	Shutdown	

RECEIVING						
INPUTS						OUTPUTS
H/$\overline{F}$	RXP	$\overline{RE}$	DE	A, B	Y, Z	RO
0	0	0	X	> -50mV	X	1
0	0	0	X	< -200mV	X	0
0	1	0	X	> -50mV	X	0
0	1	0	X	< -200mV	X	1
1	0	0	0	X	> -50mV	1
1	0	0	0	X	< -200mV	0
1	1	0	0	X	> -50mV	0
1	1	0	0	X	< -200mV	1
0	0	0	X	Open/shorted	X	1
1	0	0	0	X	Open/shorted	1
0	1	0	X	Open/shorted	X	0
1	1	0	0	X	Open/shorted	0
X	X	1	1	X	X	High-Z
X	X	1	0	X	X	Shutdown

X = Don't care; shutdown mode, driver, and receiver outputs are high impedance.

Detailed Description

The MAX13080E–MAX13089E high-speed transceivers for RS-485/RS-422 communication contain one driver and one receiver. These devices feature fail-safe circuitry, which guarantees a logic-high receiver output when the receiver inputs are open or shorted, or when they are connected to a terminated transmission line with all drivers disabled (see the *Fail-Safe* section). The MAX13080E/MAX13082E/MAX13083E/MAX13086E/MAX13088E/MAX13089E also feature a hot-swap capability allowing line insertion without erroneous data transfer (see the *Hot Swap Capability* section). The MAX13080E/MAX13081E/MAX13082E feature reduced slew-rate drivers that minimize EMI and reduce reflections caused by improperly terminated cables, allowing error-free data transmission up to 250kbps. The MAX13083E/MAX13084E also offer slew-rate limits allowing transmit speeds up to 500kbps. The MAX13086E/MAX13087E/MAX13088Es' driver slew rates are not limited, making transmit speeds up to 16Mbps possible. The MAX13089E's slew rate is selectable between 250kbps, 500kbps, and 16Mbps by driving a selector pin with a three-state driver.

The MAX13082E/MAX13088E are half-duplex transceivers, while the MAX13080E/MAX13081E/ MAX13083E/MAX13084E/MAX13086E/MAX13087E are full-duplex transceivers. The MAX13089E is selectable between half- and full-duplex communication by driving a selector pin (H/$\overline{F}$) high or low, respectively.

All devices operate from a single +5.0V supply. Drivers are output short-circuit current limited. Thermal-shutdown circuitry protects drivers against excessive power dissipation. When activated, the thermal-shutdown circuitry places the driver outputs into a high-impedance state.

Receiver Input Filtering

The receivers of the MAX13080E–MAX13084E, and the MAX13089E when operating in 250kbps or 500kbps mode, incorporate input filtering in addition to input hysteresis. This filtering enhances noise immunity with differential signals that have very slow rise and fall times. Receiver propagation delay increases by 25% due to this filtering.

Fail-Safe

The MAX13080E family guarantees a logic-high receiver output when the receiver inputs are shorted or open, or when they are connected to a terminated transmission line with all drivers disabled. This is done by setting the receiver input threshold between -50mV and -200mV. If the differential receiver input voltage (A - B) is greater than or equal to -50mV, RO is logic-high. If (A - B) is less than or equal to -200mV, RO is logic-low. In the case of a terminated bus with all transmitters disabled, the receiver's differential input voltage is pulled to 0V by the termination. With the receiver thresholds of the MAX13080E family, this results in a logic-high with a 50mV minimum noise margin. Unlike previous fail-safe devices, the -50mV to -200mV threshold complies with the ±200mV EIA/TIA-485 standard.

Hot-Swap Capability (Except MAX13081E/MAX13084E/MAX13087E)

Hot-Swap Inputs

When circuit boards are inserted into a hot or powered backplane, differential disturbances to the data bus can lead to data errors. Upon initial circuit board insertion, the data communication processor undergoes its own power-up sequence. During this period, the processor's logic-output drivers are high impedance and are unable to drive the DE and $\overline{RE}$ inputs of these devices to a defined logic level. Leakage currents up to ±10µA from the high-impedance state of the processor's logic drivers could cause standard CMOS enable inputs of a transceiver to drift to an incorrect logic level. Additionally, parasitic circuit board capacitance could cause coupling of V_{CC} or GND to the enable inputs. Without the hot-swap capability, these factors could improperly enable the transceiver's driver or receiver.

When V_{CC} rises, an internal pulldown circuit holds DE low and $\overline{RE}$ high. After the initial power-up sequence, the pulldown circuit becomes transparent, resetting the hot-swap tolerable input.

Hot-Swap Input Circuitry

The enable inputs feature hot-swap capability. At the input there are two NMOS devices, M1 and M2 (Figure 9). When V_{CC} ramps from zero, an internal 7µs timer turns on M2 and sets the SR latch, which also turns on M1. Transistors M2, a 500µA current sink, and M1, a 100µA current sink, pull DE to GND through a 5kΩ resistor. M2 is designed to pull DE to the disabled state against an external parasitic capacitance up to 100pF that can drive DE high. After 7µs, the timer deactivates M2 while M1 remains on, holding DE low against three-state leakages that can drive DE high. M1 remains on until an external source overcomes the required input current. At this time, the SR latch resets and M1 turns off. When M1 turns off, DE reverts to a standard, high-impedance CMOS input. Whenever V_{CC} drops below 1V, the hot-swap input is reset.

For $\overline{RE}$ there is a complementary circuit employing two PMOS devices pulling $\overline{RE}$ to V_{CC}.

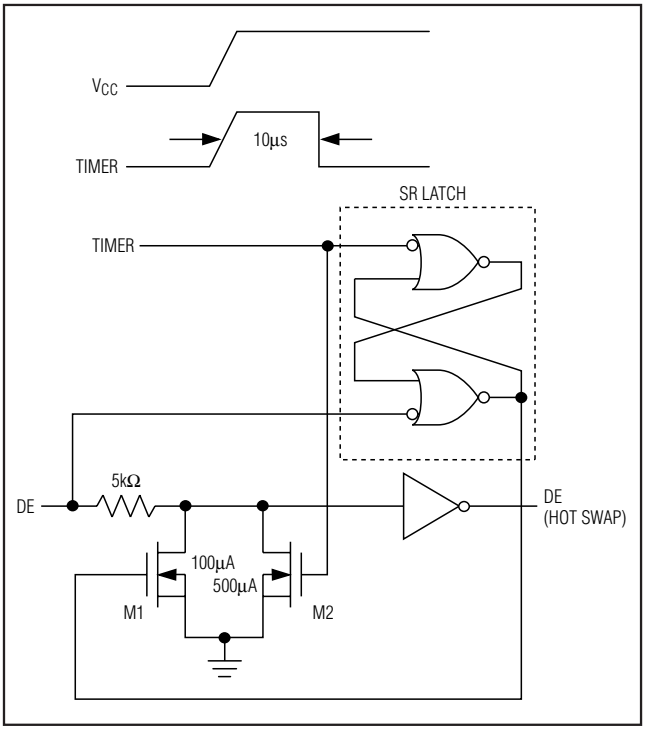

Figure 9. Simplified Structure of the Driver Enable Pin (DE)

MAX13089E Programming

The MAX13089E has several programmable operating modes. Transmitter rise and fall times are programmable, resulting in maximum data rates of 250kbps, 500kbps, and 16Mbps. To select the desired data rate, drive SRL to one of three possible states by using a three-state driver: V_{CC}, GND, or unconnected. For 250kbps operation, set the three-state device in high-impedance mode or leave SRL unconnected. For 500kbps operation, drive SRL high or connect it to V_{CC}. For 16Mbps operation, drive SRL low or connect it to GND. SRL can be changed during operation without interrupting data communications.

Occasionally, twisted-pair lines are connected backward from normal orientation. The MAX13089E has two pins that invert the phase of the driver and the receiver to correct this problem. For normal operation, drive TXP and RXP low, connect them to ground, or leave them unconnected (internal pulldown). To invert the driver phase, drive TXP high or connect it to V_{CC}. To invert the receiver phase, drive RXP high or connect it to V_{CC}. Note that the receiver threshold is positive when RXP is high.

The MAX13089E can operate in full- or half-duplex mode. Drive H/$\overline{F}$ low, leave it unconnected (internal pulldown), or connect it to GND for full-duplex operation. Drive H/$\overline{F}$ high for half-duplex operation. In full-duplex mode, the pin configuration of the driver and receiver is the same as that of a MAX13080E. In half-duplex mode, the receiver inputs are internally connected to the driver outputs through a resistor-divider. This effectively changes the function of the device's outputs. Y becomes the noninverting driver output and receiver input, Z becomes the inverting driver output and receiver input. In half-duplex mode, A and B are still connected to ground through an internal resistor-divider but they are not internally connected to the receiver.

±15kV ESD Protection

As with all Maxim devices, ESD-protection structures are incorporated on all pins to protect against electrostatic discharges encountered during handling and assembly. The driver outputs and receiver inputs of the MAX13080E family of devices have extra protection against static electricity. Maxim's engineers have developed state-of-the-art structures to protect these pins against ESD of ±15kV without damage. The ESD structures withstand high ESD in all states: normal operation, shutdown, and powered down. After an ESD event, the MAX13080E family keep working without latchup or damage.

ESD protection can be tested in various ways. The transmitter outputs and receiver inputs of the MAX13080E family are characterized for protection to the following limits:

- ±15kV using the Human Body Model
- ±6kV using the Contact Discharge method specified in IEC 61000-4-2

ESD Test Conditions

ESD performance depends on a variety of conditions. Contact Maxim for a reliability report that documents test setup, test methodology, and test results.

Human Body Model

Figure 10a shows the Human Body Model, and Figure 10b shows the current waveform it generates when discharged into a low impedance. This model consists of a 100pF capacitor charged to the ESD voltage of interest, which is then discharged into the test device through a 1.5kΩ resistor.

IEC 61000-4-2

The IEC 61000-4-2 standard covers ESD testing and performance of finished equipment. However, it does not specifically refer to integrated circuits. The MAX13080E family of devices helps you design equipment to meet IEC 61000-4-2, without the need for additional ESD-protection components.

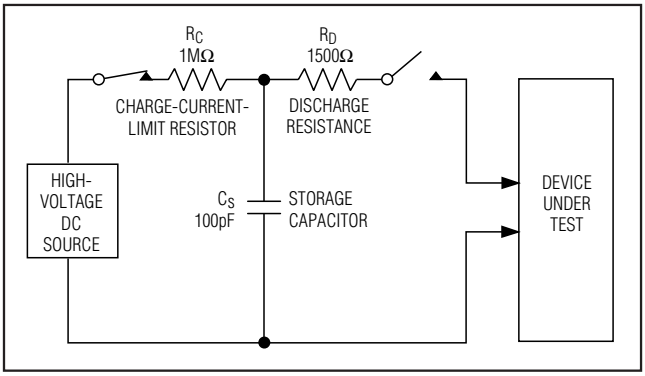

Figure 10a. Human Body ESD Test Model

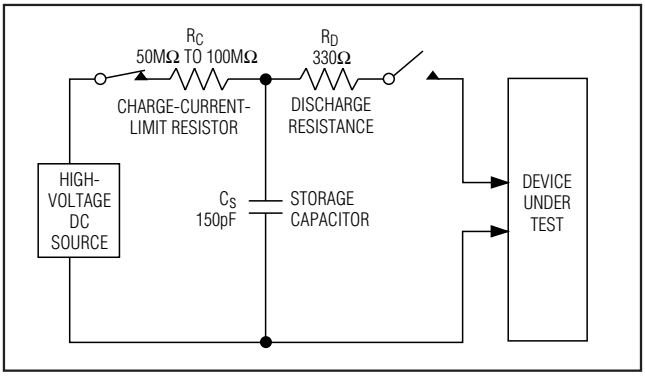

Figure 10c. IEC 61000-4-2 ESD Test Model

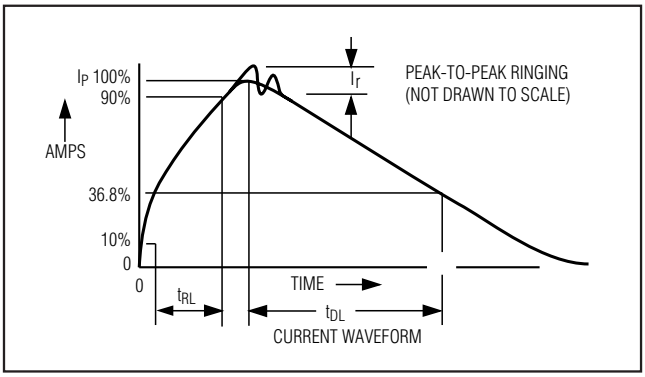

Figure 10b. Human Body Current Waveform

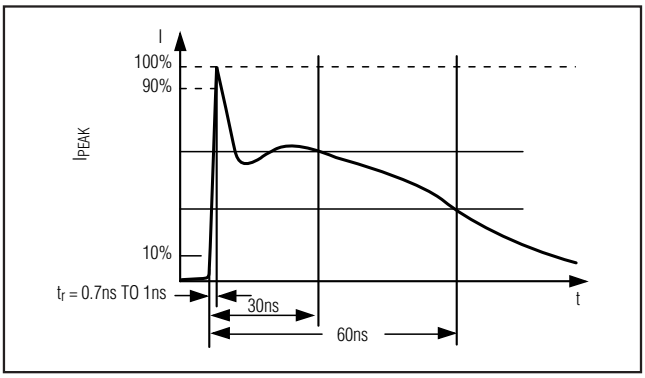

Figure 10d. IEC 61000-4-2 ESD Generator Current Waveform

The major difference between tests done using the Human Body Model and IEC 61000-4-2 is higher peak current in IEC 61000-4-2 because series resistance is lower in the IEC 61000-4-2 model. Hence, the ESD withstand voltage measured to IEC 61000-4-2 is generally lower than that measured using the Human Body Model. Figure 10c shows the IEC 61000-4-2 model, and Figure 10d shows the current waveform for IEC 61000-4-2 ESD Contact Discharge test.

Machine Model

The machine model for ESD tests all pins using a 200pF storage capacitor and zero discharge resistance. The objective is to emulate the stress caused when I/O pins are contacted by handling equipment during test and assembly. Of course, all pins require this protection, not just RS-485 inputs and outputs.

Applications Information

256 Transceivers on the Bus

The standard RS-485 receiver input impedance is 12kΩ (1-unit load), and the standard driver can drive up to 32-unit loads. The MAX13080E family of transceivers has a 1/8-unit load receiver input impedance (96kΩ), allowing up to 256 transceivers to be connected in parallel on one communication line. Any combination of these devices, as well as other RS-485 transceivers with a total of 32-unit loads or fewer, can be connected to the line.

Reduced EMI and Reflections

The MAX13080E/MAX13081E/MAX13082E feature reduced slew-rate drivers that minimize EMI and reduce reflections caused by improperly terminated cables, allowing error-free data transmission up to 250kbps. The MAX13083E/MAX13084E offer higher driver output slew-rate limits, allowing transmit speeds up to 500kbps. The MAX13089E with SRL = V_{CC} or unconnected are slew-rate limited. With SRL unconnected, the MAX13089E error-free data transmission is up to 250kbps. With SRL connected to V_{CC}, the data transmit speeds up to 500kbps.

Low-Power Shutdown Mode (Except MAX13081E/MAX13084E/MAX13087E)

Low-power shutdown mode is initiated by bringing both $\overline{RE}$ high and DE low. In shutdown, the devices typically draw only 2.8µA of supply current.

$\overline{RE}$ and DE can be driven simultaneously; the devices are guaranteed not to enter shutdown if $\overline{RE}$ is high and DE is low for less than 50ns. If the inputs are in this state for at least 700ns, the devices are guaranteed to enter shutdown.

Enable times t_{ZH} and t_{ZL} (see the *Switching Characteristics* section) assume the devices were not in a low-power shutdown state. Enable times $t_{ZH(SHDN)}$ and $t_{ZL(SHDN)}$ assume the devices were in shutdown state. It takes drivers and receivers longer to become enabled from low-power shutdown mode ($t_{ZH(SHDN)}$, $t_{ZL(SHDN)}$) than from driver/receiver-disable mode (t_{ZH}, t_{ZL}).

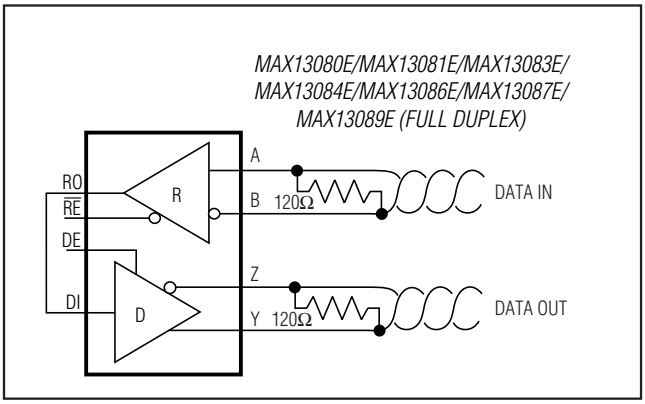

Figure 11. Line Repeater for MAX13080E/MAX13081E/ MAX13083E/MAX13084E/MAX13086E/MAX13087E/MAX13089E in Full-Duplex Mode

Driver Output Protection

Two mechanisms prevent excessive output current and power dissipation caused by faults or by bus contention. The first, a foldback current limit on the output stage, provides immediate protection against short circuits over the whole common-mode voltage range (see the *Typical Operating Characteristics*). The second, a thermal-shutdown circuit, forces the driver outputs into a high-impedance state if the die temperature exceeds +175°C (typ).

Line Length

The RS-485/RS-422 standard covers line lengths up to 4000ft. For line lengths greater than 4000ft, use the repeater application shown in Figure 11.

Typical Applications

The MAX13082E/MAX13088E/MAX13089E transceivers are designed for bidirectional data communications on multipoint bus transmission lines. Figures 12 and 13 show typical network applications circuits.

To minimize reflections, terminate the line at both ends in its characteristic impedance, and keep stub lengths off the main line as short as possible. The slew-rate-limited MAX13082E and the two modes of the MAX13089E are more tolerant of imperfect termination.

Chip Information

PROCESS: BiCMOS

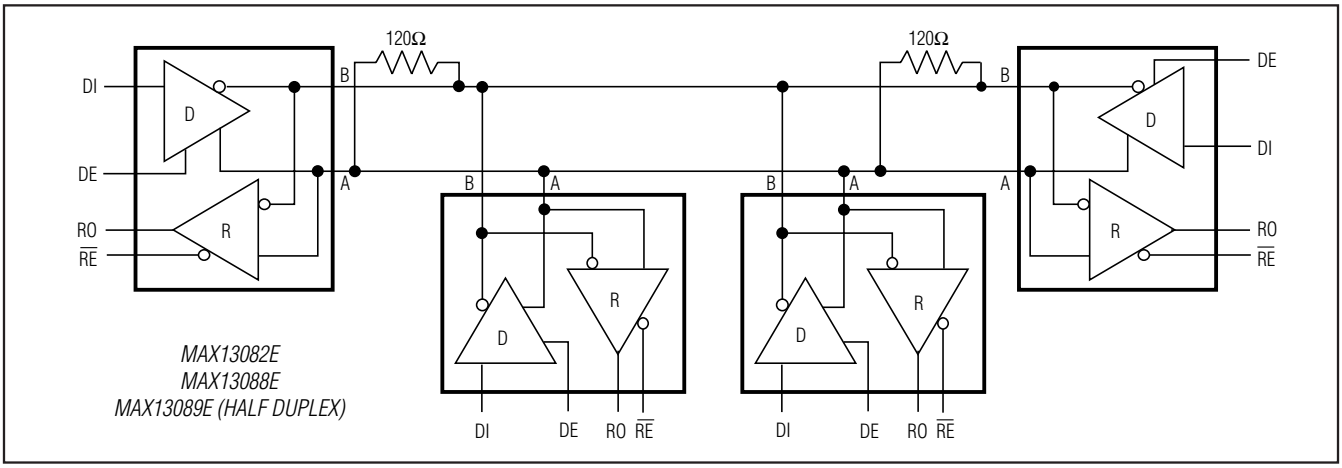

Figure 12. Typical Half-Duplex RS-485 Network

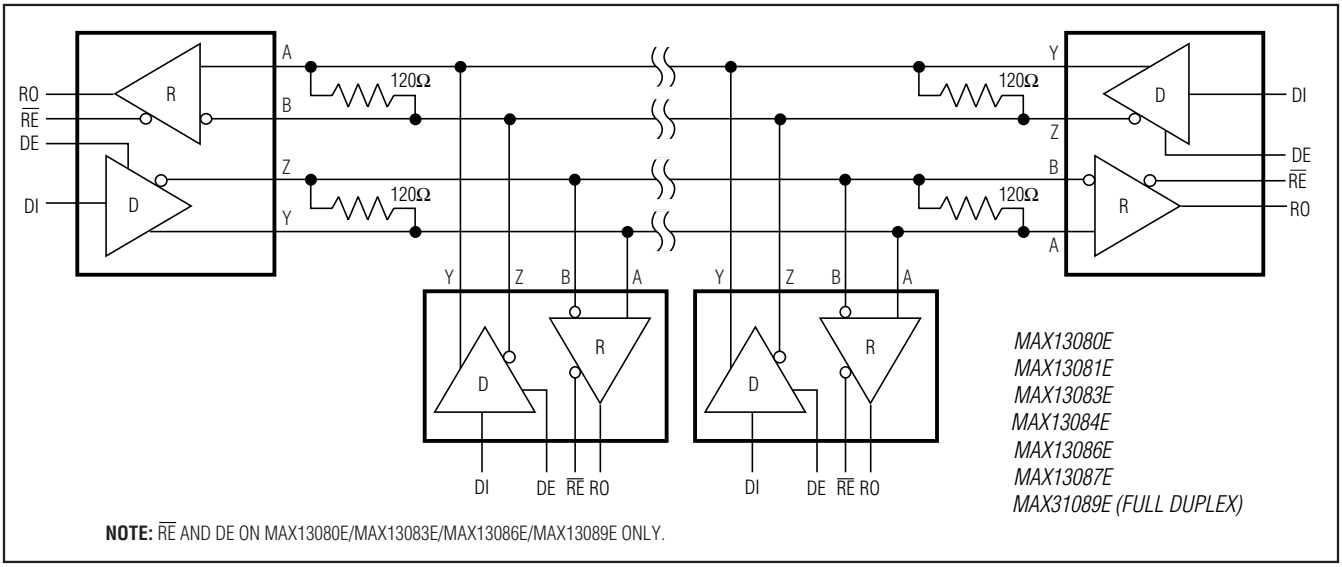

Figure 13. Typical Full-Duplex RS-485 Network

Selector Guide

PART	HALF/FULL DUPLEX	DATA RATE (Mbps)	SLEW-RATE LIMITED	LOW-POWER SHUTDOWN	RECEIVER/ DRIVER ENABLE	TRANSCEIVERS ON BUS	PINS
MAX13080E	Full	0.250	Yes	Yes	Yes	256	14
MAX13081E	Full	0.250	Yes	No	No	256	8
MAX13082E	Half	0.250	Yes	Yes	Yes	256	8
MAX13083E	Full	0.5	Yes	Yes	Yes	256	14
MAX13084E	Full	0.5	Yes	No	No	256	8
MAX13086E	Full	16	No	Yes	Yes	256	14
MAX13087E	Full	16	No	No	No	256	8
MAX13088E	Half	16	No	Yes	Yes	256	8
MAX13089E	Selectable	Selectable	Selectable	Yes	Yes	256	14

Pin Configurations and Typical Operating Circuits

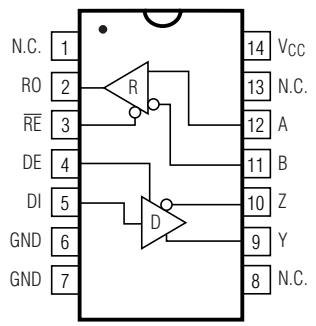

DIP/SO

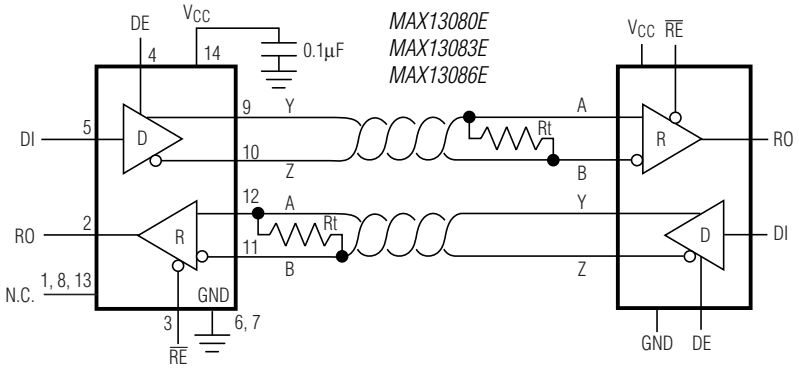

TYPICAL FULL-DUPLEX OPERATING CIRCUIT

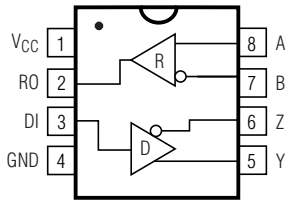

DIP/SO

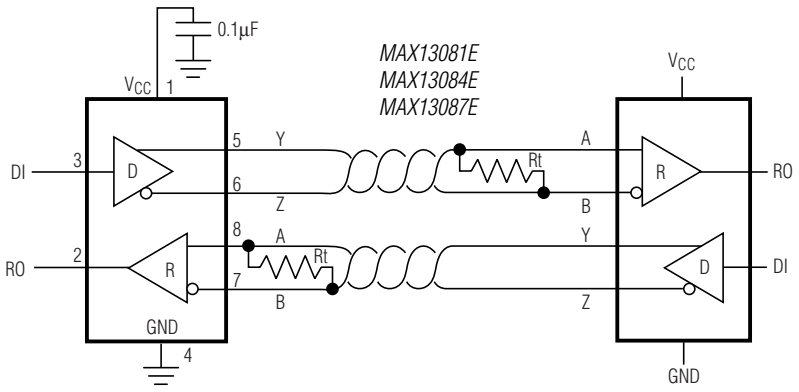

TYPICAL FULL-DUPLEX OPERATING CIRCUIT

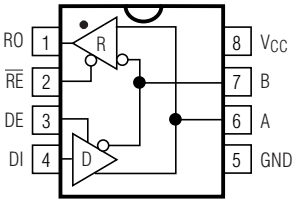

DIP/SO

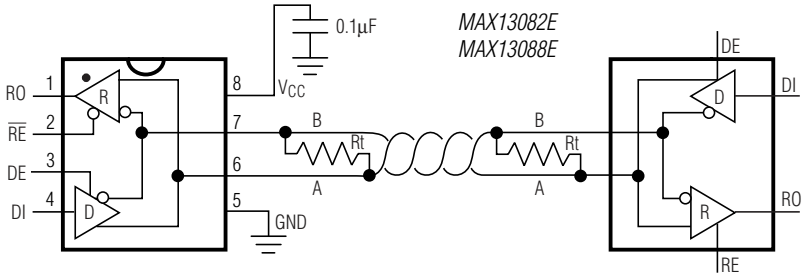

TYPICAL HALF-DUPLEX OPERATING CIRCUIT

NOTE: PIN LABELS Y AND Z ON TIMING, TEST, AND WAVEFORMS DIAGRAMS. SEE PINS A AND B WHEN DE IS HIGH.

Pin Configurations and Typical Operating Circuits (continued)

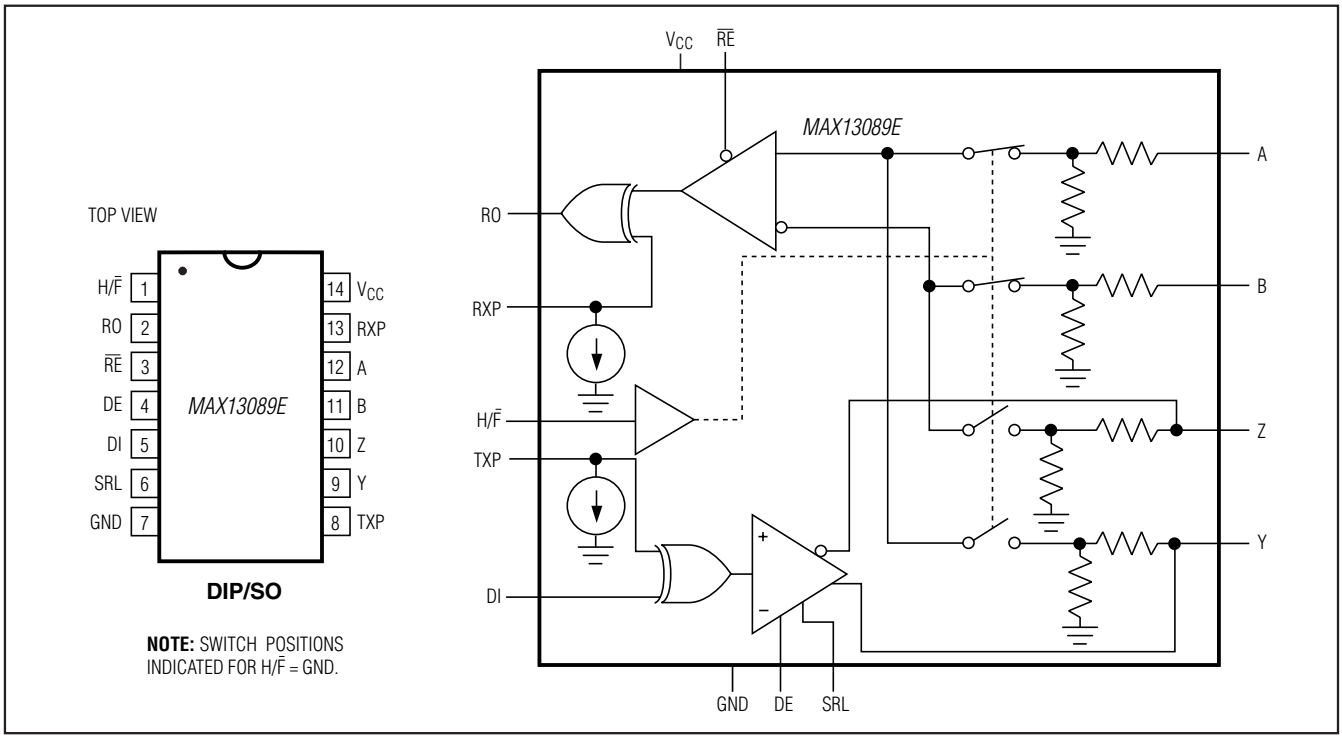

Ordering Information (continued)

PART	TEMP RANGE	PIN-PACKAGE
MAX13081ECPA+	0°C to +70°C	8 PDIP
MAX13081ECSA+	0°C to +70°C	8 SO
MAX13081EEPA+	-40°C to +85°C	8 PDIP
MAX13081EESA+	-40°C to +85°C	8 SO
MAX13081EAPA+	-40°C to +125°C	8 PDIP
MAX13081EASA+	-40°C to +125°C	8 SO
MAX13082ECPA+	0°C to +70°C	8 PDIP
MAX13082ECSA+	0°C to +70°C	8 SO
MAX13082EEPA+	-40°C to +85°C	8 PDIP
MAX13082EESA+	-40°C to +85°C	8 SO
MAX13082EAPA+	-40°C to +125°C	8 PDIP
MAX13082EASA+	-40°C to +125°C	8 SO
MAX13083ECPD+	0°C to +70°C	14 PDIP
MAX13083ECSD+	0°C to +70°C	14 SO
MAX13083EEPD+	-40°C to +85°C	14 PDIP
MAX13083EESD+	-40°C to +85°C	14 SO
MAX13083EAPD+	-40°C to +125°C	14 PDIP
MAX13083EASD+	-40°C to +125°C	14 SO
MAX13084ECPA+	0°C to +70°C	8 PDIP
MAX13084ECSA+	0°C to +70°C	8 SO
MAX13084EEPA+	-40°C to +85°C	8 PDIP
MAX13084EESA+	-40°C to +85°C	8 SO
MAX13084EAPA+	-40°C to +125°C	8 PDIP
MAX13084EASA+	-40°C to +125°C	8 SO

+Denotes a lead(Pb)-free/RoHS-compliant package.

PART	TEMP RANGE	PIN-PACKAGE
MAX13086ECPD+	0°C to +70°C	14 PDIP
MAX13086ECSD+	0°C to +70°C	14 SO
MAX13086EEPD+	-40°C to +85°C	14 PDIP
MAX13086EESD+	-40°C to +85°C	14 SO
MAX13086EAPD+	-40°C to +125°C	14 PDIP
MAX13086EASD+	-40°C to +125°C	14 SO
MAX13087ECPA+	0°C to +70°C	8 PDIP
MAX13087ECSA+	0°C to +70°C	8 SO
MAX13087EEPA+	-40°C to +85°C	8 PDIP
MAX13087EESA+	-40°C to +85°C	8 SO
MAX13087EAPA+	-40°C to +125°C	8 PDIP
MAX13087EASA+	-40°C to +125°C	8 SO
MAX13088ECPA+	0°C to +70°C	8 PDIP
MAX13088ECSA+	0°C to +70°C	8 SO
MAX13088EEPA+	-40°C to +85°C	8 PDIP
MAX13088EESA+	-40°C to +85°C	8 SO
MAX13088EAPA+	-40°C to +125°C	8 PDIP
MAX13088EASA+	-40°C to +125°C	8 SO
MAX13089ECPD+	0°C to +70°C	14 PDIP
MAX13089ECSD+	0°C to +70°C	14 SO
MAX13089EEPD+	-40°C to +85°C	14 PDIP
MAX13089EESD+	-40°C to +85°C	14 SO
MAX13089EAPD+	-40°C to +125°C	14 PDIP
MAX13089EASD+	-40°C to +125°C	14 SO

Package Information

For the latest package outline information and land patterns (footprints), go to **www.maxim-ic.com/packages**. Note that a "+", "#", or "-" in the package code indicates RoHS status only. Package drawings may show a different suffix character, but the drawing pertains to the package regardless of RoHS status.

PACKAGE TYPE	PACKAGE CODE	OUTLINE NO.	LAND PATTERN NO.
8 PDIP	P8+2	21-0043	—
8 SO	S8+4	21-0041	90-0096
14 PDIP	P14+3	21-0043	—
14 SO	S14+1	21-0041	90-0112

Revision History

REVISION NUMBER	REVISION DATE	DESCRIPTION	PAGES CHANGED
2	11/11	Deleted all reference to the MAX13085E	1, 2, 3, 5, 12. 13, 14, 15, 16, 17, 18, 19, 20, 22

Maxim cannot assume responsibility for use of any circuitry other than circuitry entirely embodied in a Maxim product. No circuit patent licenses are implied. Maxim reserves the right to change the circuitry and specifications without notice at any time. The parametric values (min and max limits) shown in the Electrical Characteristics table are guaranteed. Other parametric values quoted in this data sheet are provided for guidance.

Maxim Integrated 160 Rio Robles, San Jose, CA 95134 USA 1-408-601-1000

© 2011 Maxim Integrated

The Maxim logo and Maxim Integrated are trademarks of Maxim Integrated Products, Inc.

Looking for pricing, stock, or lifecycle information?

Click below to explore more details on WIN SOURCE:

- View MAX13089ECSD+ on WIN SOURCE
- Maxim Integrated Information

Optimize Your Supply Chain with WIN SOURCE Solutions

- Global Sourcing Solution
- Obsolete Management
- Cost Control Management
- Shortage Management
- Alternative Solution
- Excess Inventory Management