THE DATASHEET OF

S25FL208K0RMFI013

www.win-source.net 0086-755-83957316

S25FL208K

8-Mbit 3.0V Serial Flash Memory with Uniform 4 kB Sectors

Distinctive Features

- Single power supply operation
  - Full voltage range: 2.7 to 3.6V
- 8-Mbit Serial Flash
  - 8-Mbit/1024 kbyte/4096 pages
  - 256 bytes per programmable page
  - Uniform 4-kbyte Sectors/64-kbyte Blocks
- Standard and Dual
  - Standard SPI: SCK, CS#, SI, SO, WP#, HOLD#
  - Dual SPI: SCK, CS#, SI/IO0, SO, WP#, HOLD#
  - Fast Read Dual Output instruction
  - Auto-increment Read capability
- High Performance
  - FAST READ (Serial): 76 MHz clock rate
  - DUAL OUTPUT READ: 76 MHz clock rate
- Low Power Consumption
  - 12 mA typical active current
  - 15 µA typical standby current
- Flexible Architecture with 4 kB Sectors
  - Sector Erase (4 kB)
  - Block Erase (64 kB)
  - Page Program up to 256 bytes
  - 100k erase/program cycles typical
  - 20-year data retention typical
- Software and Hardware Write Protection
  - Write Protect all or portion of memory via software
  - Enable/Disable protection with WP# pin
- High Performance Program/Erase Speed
  - Page program time: 1.5 ms typical
  - Sector erase time (4 kB): 50 ms typical
  - Block erase time (64 kB): 500 ms typical
  - Chip erase time: 7 seconds typical
- Package Options
  - 8-pin SOIC 150/208-mil
  - All Pb-free packages are RoHS compliant

General Description

The S25FL208K (8-Mbit, 1024-kbyte) Serial Flash memory, with advanced write protection mechanisms. The S25FL208K supports the standard Serial Peripheral Interface (SPI), and a high performance Dual output using SPI pins: Serial Clock, Chip Select, Serial SI/IO0, SO, WP# and HOLD#. SPI clock frequencies of up to 76 MHz are supported along with a clock rate of 76 MHz for Dual Output Read.

The S25FL208K array is organized into 4,096 programmable pages of 256 bytes each. Up to 256 bytes can be programmed at a time. Pages can be erased in groups of 16 (4-kB Sector Erase)Document Number: 002-00721 Rev. *HDocument Number: 002-00721 Rev. *H, groups of 256 (64-kB Block Erase) or the entire chip (Chip Erase). The S25FL208K has 256 erasable sectors and 16 erasable blocks. The small 4 kB sectors allow for greater flexibility in applications that require data and parameter storage.

A Hold pin, Write Protect Pin and programmable write protection provide further control flexibility. Additionally, the S25FL208K device supports JEDEC standard manufacturer and device identification.

Not recommended for new designs

Contents

Distinctive Features 1
General Description 1
1. Block Diagram 3
2. Connection Diagrams 3
3. Signal Descriptions 4
4. Ordering Information 5
4.1 Valid Combinations 5
5. Memory Organizations 6
6. Functional Description 7
6.1 SPI Modes 7
6.2 Dual Output SPI 7
6.3 Hold Function 7
6.4 Status Register 8
7. Write Protection 8
7.1 Page Programming 10
7.2 Sector Erase, Block Erase, and Chip Erase 10
7.3 Polling During a Write, Program, or Erase Cycle 10
7.4 Active Power, Stand-by Power, and Deep Power-Down Modes 10
8. Commands 10
8.1 Write Enable (06h) 11
8.2 Write Disable (04h) 12
8.3 Read Status Register (05h) 12
8.4 Write Status Register (01h) 13
8.5 Read Data (03h) 14
8.6 Fast Read (0Bh) 14
8.7 Fast Read Dual Output (3Bh) 15
8.8 Page Program (PP) (02h) 16
8.9 Sector Erase (SE) (20h) 17
8.10 Block Erase (BE) (D8h) 18
8.11 Chip Erase (CE) (C7h) 18
8.12 Deep Power-down (DP) (B9h) 19
8.13 Release Deep Power-down / Device ID (ABh) 20
8.14 Read Manufacturer / Device ID (90h) 21
8.15 Read Identification (RDID) (9Fh) 22
9. Electrical Specifications 24
9.1 Power-up Timing 24
9.2 Absolute Maximum Ratings 25
9.3 Recommended Operating Ranges 25
9.4 DC Characteristics 26
9.5 AC Measurement Conditions 26
9.6 AC Characteristics 27
10. Package Material 30
10.1 8-Pin SOIC 150-mil Package (SOA 008) 30
10.2 8-Pin SOIC 208-mil Package (SOC 008) 31
11. Revision History 32

Not recommended for new designs

1. Block Diagram

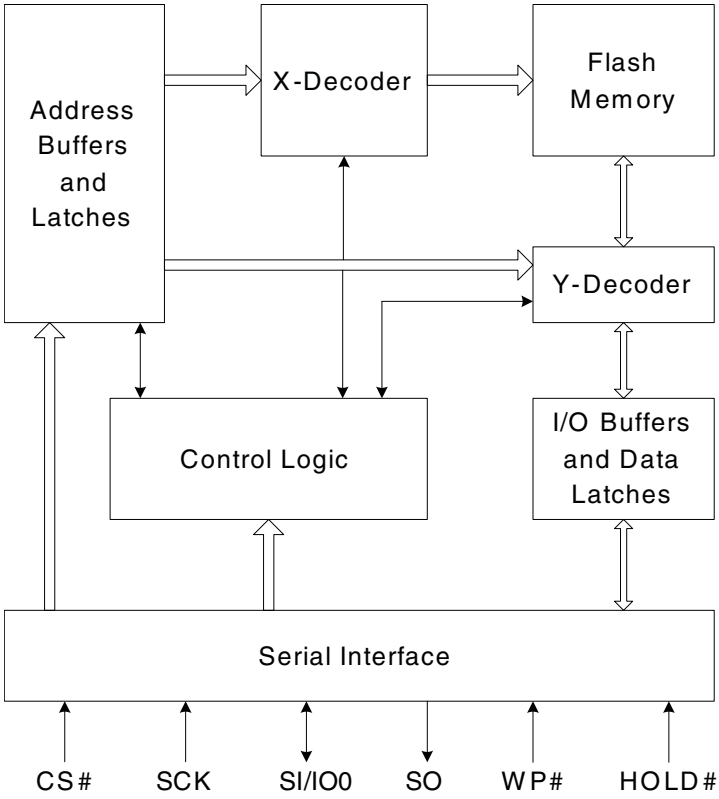

2. Connection Diagrams

Figure 2.1 8-pin SOIC (150/208 mil)

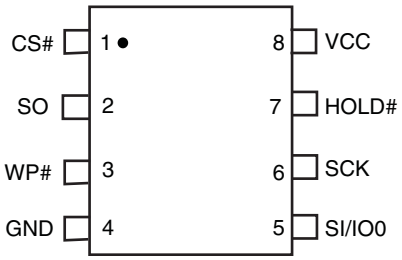

Not recommended for new designs

3. Signal Descriptions

Serial Data Input / Output (SI/IO0)

The SPI Serial Data Input/Output (SI/IO0) pin provides a means for instructions, addresses and data to be serially written to (shifted into) the device. Data is latched on the rising edge of the Serial Clock (SCK) input pin. The SI/IO0 pin is also used as an output pin when the Fast Read Dual Output instruction is executed.

Serial Data Output (SO)

The SPI Serial Data Output (SO) pin provides a means for data and status to be serially read from (shifted out of) the device. Data is shifted out on the falling edge of the Serial Clock (SCK) input pin.

Serial Clock (SCK)

The SPI Serial Clock Input (SCK) pin provides the timing for serial input and output operations. See *SPI Modes* on page 7.

Chip Select (CS#)

The SPI Chip Select (CS#) pin enables and disables device operation. When CS# is high the device is deselected and the Serial Data Output pins are at high impedance.

When deselected, the device's power consumption will be at standby levels unless an internal erase, program or status register cycle is in progress. When CS# is brought low the device will be selected, power consumption will increase to active levels and instructions can be written to and data read from the device. After power-up, CS# must transition from high to low before a new instruction will be accepted.

HOLD (HOLD#)

The HOLD# pin allows the device to be paused while it is actively selected. When HOLD# is brought low, while CS# is low, the SO pin will be at high impedance and signals on the SI and SCK pins will be ignored (don't care). The HOLD# function can be useful when multiple devices are sharing the same SPI signals.

Write Protect (WP#)

The Write Protect (WP#) pin can be used to prevent the Status Register from being written. Used in conjunction with the Status Register's Block Protect (BP0, BP1 and BP2, BP3) bits and Status Register Protect (SRP) bits, a portion or the entire memory array can be hardware protected.

Table 3.1 Pin Descriptions

Symbol	Pin Name
SCK	Serial Clock Input
SI/IO0	Serial Data Input / Output (1)
SO	Serial Data Output
CS#	Chip Enable
WP#	Write Protect
HOLD#	Hold Input
VCC	Supply Voltage (2.7-3.6V)
GND	Ground

Note:
1. SI/IO0 output is used for Dual Output Read instruction.

Not recommended for new designs

4. Ordering Information

The ordering part number is formed by a valid combination of the following:

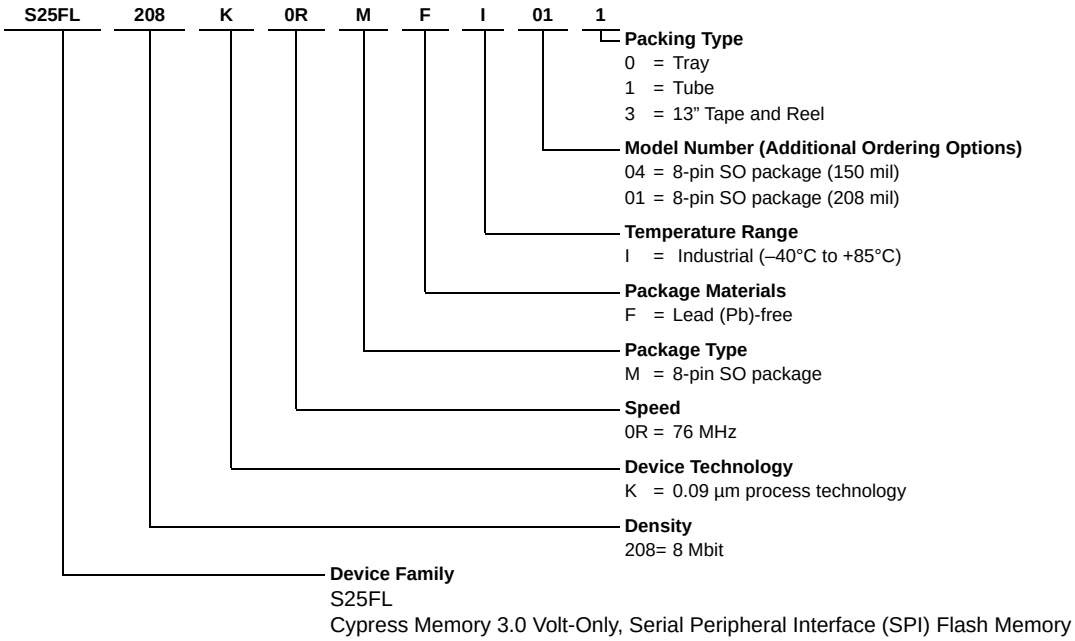

4.1 Valid Combinations

Table 4.1 lists the valid combinations configurations planned to be supported in volume for this device.

Table 4.1 S25FL208K Valid Combinations

S25FL208K Valid Combinations					
Base Ordering Part Number	**Speed Option**	**Package and Temperature**	**Model Number**	**Packing Type**	**Package Marking**
S25FL208K	0R	MFI	01, 04	0, 1, 3	FL208KIF

Not recommended for new designs

5. Memory Organizations

The memory is organized as:

- 1,048,576 bytes
- Uniform Sector Architecture
  - 16 blocks of 64 kB
  - 256 sectors of 4 kB
- 4,098 pages (256 bytes each)

Each page can be individually programmed (bits are programmed from 1 to 0). The device is Sector, Block, or Chip Erasable but not Page Erasable.

Figure 5.1 Memory Organization

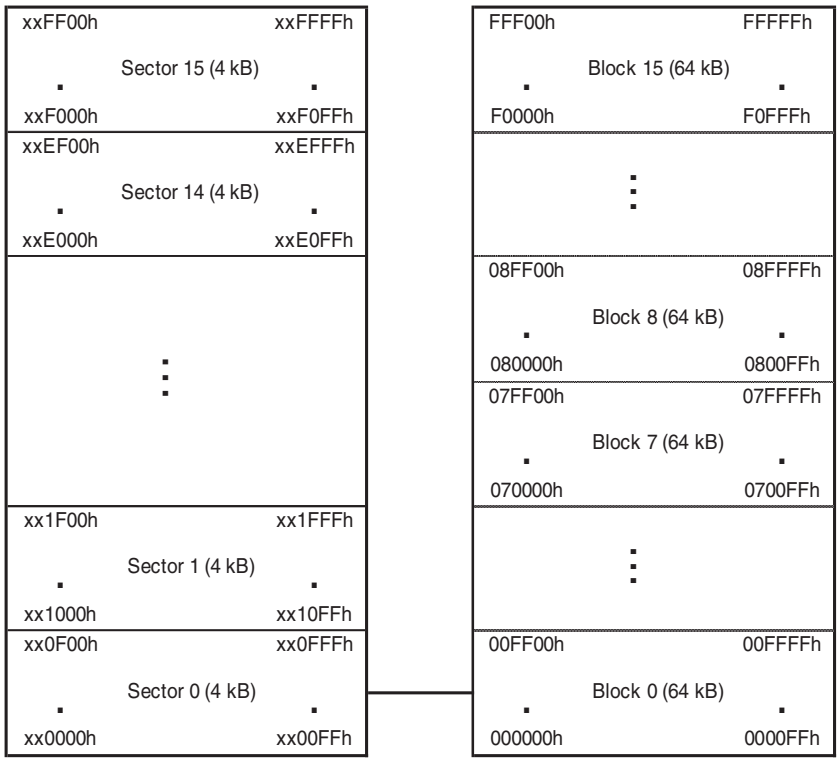

Not recommended for new designs

6. Functional Description

6.1 SPI Modes

The S25FL208K device can be driven by an embedded microcontroller (bus master) in either of the two following clocking modes.

- Mode 0 with Clock Polarity (CPOL) = 0 and, Clock Phase (CPHA) = 0
- Mode 3 with CPOL = 1 and, CPHA = 1

For these two modes, input data into the device is always latched in on the rising edge of the SCK signal and the output data is always available from the falling edge of the SCK clock signal. The difference between the two modes is the clock polarity when the bus master is in standby mode and not transferring any data.

- SCK will stay at logic low state with CPOL = 0, CPHA = 0
- SCK will stay at logic high state with CPOL = 1, CPHA = 1

Figure 6.1 SPI Modes

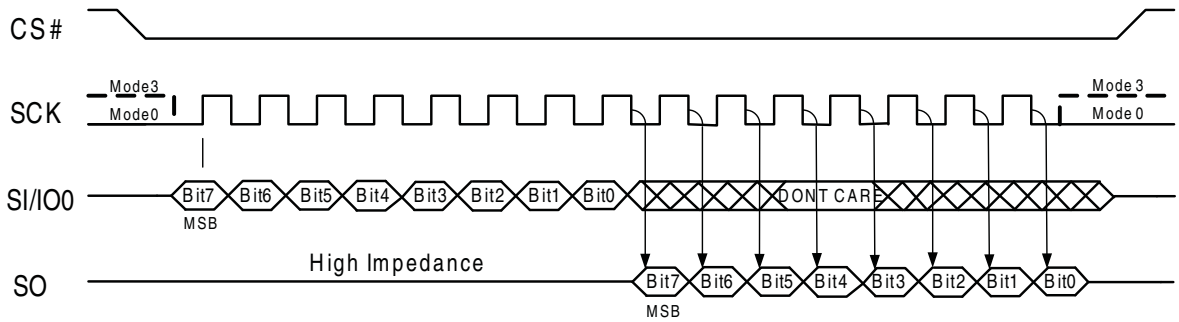

6.2 Dual Output SPI

The S25FL208K supports Dual Output Operation when using the “Fast Read with Dual Output” (3B hex) command. This feature allows data to be transferred from the Serial Flash at twice the rate possible with the standard SPI. This command can be used to quickly download code from Flash to RAM upon Power-up (Code-shadowing) or for applications that cache code-segments to RAM for execution.

The Dual Output feature simply allows the SPI data input pin (SI) to also serve as an output during this command. All other operations use the standard SPI interface with single signal. The host keeps CS# low and HOLD# high. The Write Protect (WP#) signal is ignored. The memory drives data on the SI/IO0 and SO signals during the dual output cycles. The next interface state continues to be Dual Output Cycle until the host returns CS# to high ending the command.

6.3 Hold Function

The Hold (HOLD#) signal is used to pause any serial communications with the S25FL208K device without deselecting the device or stopping the serial clock. To enter the Hold condition, the device must be selected by driving the CS# input to the logic low state. It is recommended that the user keep the CS# input low state during the entire duration of the Hold condition. This is to ensure that the state of the interface logic remains unchanged from the moment of entering the Hold condition. If the CS# input is driven to the logic high state while the device is in the Hold condition, the interface logic of the device will be reset. To restart communication with the device, it is necessary to drive HOLD# to the logic high state while driving the CS# signal into the logic low state. This prevents the device from going back into the Hold condition.

The Hold condition starts on the falling edge of the Hold (HOLD#) signal, provided that this coincides with SCK being at the logic low state. If the falling edge does not coincide with the SCK signal being at the logic low state, the Hold condition starts whenever the SCK signal reaches the logic low state. Taking the HOLD# signal to the logic low state does not terminate any Write, Program or Erase operation that is currently in progress.

Not recommended for new designs

During the Hold condition, SO is in high impedance and both the SI and SCK input are Don't Care. The Hold condition ends on the rising edge of the Hold (HOLD#) signal, provided that this coincides with the SCK signal being at the logic low state. If the rising edge does not coincide with the SCK signal being at the logic low state, the Hold condition ends whenever the SCK signal reaches the logic low state.

Figure 6.2 Hold Condition Waveform

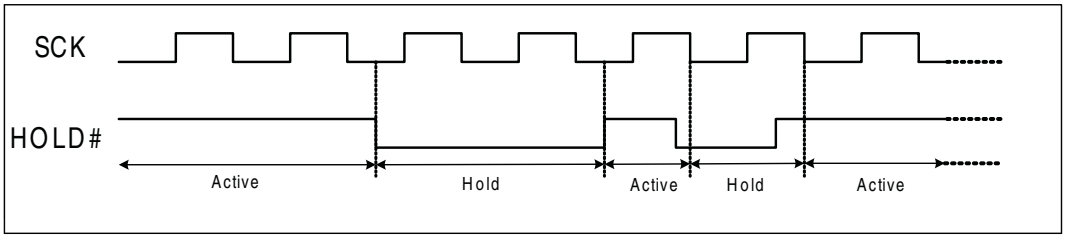

6.4 Status Register

The Status Register contains a number of status and control bits that can be read or set (as appropriate) by specific instructions

Table 6.1 Status Register Bit Locations

R7	R6	R5	R4	R3	R2	R1	R0
SRP	REV	BP3	BP2	BP1	BP0	WEL	WIP

- **Write in Progress (WIP)** is a read only bit in the status register (R0) which indicates whether the device is performing a program, write, erase operation, or any other operation, during which a new operation command will be ignored. When the WIP bit is set to 1, the device is busy performing an operation. When the bit is cleared to 0, no operation is in progress.
- **Write Enable Latch (WEL)** is a read only bit in the status register (R1) that must be set to 1 to enable program, write, or erase operations as a means to provide protection against inadvertent changes to memory or register values. The Write Enable (WREN) command execution sets the Write Enable Latch to a 1 to allow any program, erase, or write commands to execute afterwards. The Write Disable (WRDI) command can be used to set the Write Enable Latch to a 0 to prevent all program, erase, and write commands from execution. The WEL bit is cleared to 0 at the end of any successful program, write, or erase operation. After a power down/power up sequence, hardware reset, or software reset, the Write Enable Latch is set to a 0.
- **Block Protect Bits (BP3, BP2, BP1, BP0)** are non-volatile read/write bits in the status register (R5, R4, R3, and R2) that define the main flash array area to be software protected against program and erase commands. When one or more of the BP bits is set to 1, the relevant memory area is protected against program and erase. The Chip Erase (CE) command can be executed only when the BP bits are cleared to 0's. See Table 7.1 on page 9 for a description of how the BP bit values select the memory array area protected. The factory default setting for all the BP bits is 0, which implies that none of array is protected.
- **Reserved Bits (REV)**, Status register bit location R6 is reserved for future use. Current devices will read 0 for this bit location. It is recommended to mask out the reserved bit when testing the Status Register. Doing this will ensure compatibility with future devices.
- **The Status Register Protect (SRP)** bit is a non-volatile read/write bit in status register (R7) that can be used in conjunction with the Write Protect (WP#) pin to disable writes to status register. When the SRP bit is set to a 0 state (factory default) the WP# pin has no control over status register. When the SRP pin is set to a 1, the Write Status Register instruction is locked out while the WP# pin is low. When the WP# pin is high the Write Status Register instruction is allowed.

Not recommended for new designs

7. Write Protection

Some basic protection against unintended changes to stored data is provided and controlled purely by the hardware design. These protection mechanisms in the S25FL208K device are described below:

- Power-On Reset and an internal timer (t_{PUW}) can provide protection against inadvertent changes while the power supply is outside the operating specification.
- Program, Erase and Write Status Register instructions are checked that they consist of a number of clock pulses that is a multiple of eight, before they are accepted for execution.
- All instructions that modify data must be preceded by a Write Enable (WREN) instruction to set the Write Enable Latch (WEL) bit. This bit is returned to its reset state by the following events:

– Power-up

– Write Disable (WRDI) instruction completion or Write Status Register (WRSR) instruction completion or Page Program (PP) instruction completion or Sector Erase (SE) instruction completion or Block Erase (BE) instruction completion or Chip Erase (CE) instruction completion

- The Block Protect (BP3, BP2, BP1, and BP0) bits allow part of the memory to be configured as read-only. This is the Software Protected Mode (SPM).
- The Write Protect (WP#) signal allows the Block Protect (BP3, BP2, BP1, BP0) bits and Status Register Protect (SRP) bit to be protected. This is the Hardware Protected Mode (HPM).
- In addition to the low power consumption feature, the Deep Power-down mode offers extra software protection from inadvertent Write, Program and Erase instructions, as all instructions are ignored except one particular instruction (the Release from Deep Power-down instruction).

Table 7.1 Protected Area Sizes Block Organization — S25FL208K

Status Bit				Protect Blocks
BP3	BP2	BP1	BP0	
0	0	0	0	0 (None)
0	0	0	1	1 (1 block, block 15)
0	0	1	0	2 (2 blocks, block 14th~15th)
0	0	1	1	3 (4 blocks, block 12th~15th)
0	1	0	0	4 (8 blocks, block 8th~15th)
0	1	0	1	5 (32 blocks, all)
0	1	1	0	6 (32 blocks, all)
0	1	1	1	7 (32 blocks, all)
1	0	0	0	8 none
1	0	0	1	9 (254 sectors, sector 0th~253th)
1	0	1	0	10 (252 sectors, sector 0th~251th)
1	0	1	1	11 (248 sectors, sector 0th~247th)
1	1	0	0	12 (240 sectors, sector 0th~239th)
1	1	0	1	13 (224 sectors, sectors 0th~223th)
1	1	1	0	14 (192 sectors, sectors 0th~191th)
1	1	1	1	15 (32 blocks, all)

Not recommended for new designs

7.1 Page Programming

To program one data byte, two instructions are required: Write Enable (WREN), which is one byte, and a Page Program (PP) sequence, which consists of four bytes plus data. This is followed by the internal Program cycle (of duration t_{PP}). To spread this overhead, the Page Program (PP) instruction allows up to 256 bytes to be programmed at a time (changing bits from 1 to 0), provided that they lie in consecutive addresses on the same page of memory.

7.2 Sector Erase, Block Erase, and Chip Erase

The Page Program (PP) instruction allows bits to be reset from 1 to 0. Before this can be applied, the bytes of memory need to have been erased to all 1s (FFh). This can be achieved a sector at a time, using the Sector Erase (SE) instruction, a block at a time using the Block Erase (BE) instruction or throughout the entire memory, using the Chip Erase (CE) instruction. This starts an internal Erase cycle (of duration $t_{SE,}$ $t_{BE,}$ or t_{CE}). The Erase instruction must be preceded by a Write Enable (WREN) instruction.

7.3 Polling During a Write, Program, or Erase Cycle

A further improvement in the time to Write Status Register (WRSR), Program (PP) or Erase (SE, BE, or CE) can be achieved by not waiting for the worst case delay (t_W, t_{PP}, t_{SE}, t_{BE}, or t_{CE}). The Write In Progress (WIP) bit is provided in the Status Register so that the application program can monitor its value, polling it to establish when the previous Write cycle, Program cycle or Erase cycle is complete.

7.4 Active Power, Stand-by Power, and Deep Power-Down Modes

When Chip Select (CS#) is Low, the device is enabled, and in the Active Power mode. When Chip Select (CS#) is High, the device is disabled, but could remain in the Active Power mode until all internal cycles have completed (Program, Erase, Write Status Register). The device then goes into the Standby Power mode. The device consumption drops to I_{CC1}.

The Deep Power-down mode is entered when the specific instruction (the Enter Deep Power-down Mode (DP) instruction) is executed with the device consumption at I_{CC2}. The device remains in this mode until another specific instruction (the Release from Deep Power-down Mode and Read Device ID (RDI) instruction) is executed.

All other instructions are ignored while the device is in the Deep Power-down mode. This can be used as an extra software protection mechanism, when the device is not in active use, to protect the device from inadvertent Write, Program or Erase instructions.

8. Commands

The command set of the S25FL208K consists of fifteen basic instructions that are fully controlled through the SPI bus (see Table 8.1). The host system must shift all commands, addresses, and data in and out of the device, beginning with the most significant bit. On the first rising edge of SCK after CS# is driven low, the device accepts the one-byte command on SI (all commands are one byte long), most significant bit first. Each successive bit is latched on the rising edge of SCK.

Every command sequence begins with a one-byte command code. The command may be followed by address, data, both, or nothing, depending on the command. CS# must be driven high after the last bit of the command sequence has been written. All commands that write, program or erase require that CS# be driven high at a byte boundary, otherwise the command is not executed. Since a byte is composed of eight bits, CS# must therefore be driven high when the number of clock pulses after CS# is driven low is an exact multiple of eight. The device ignores any attempt to access the memory array during a Write Registers, program, or erase operation, and continues the operation uninterrupted.

Table 8.1 Command Set

Command Name	Byte1 Code	Byte2	Byte3	Byte4	Byte5	Byte6	N-bytes
Write Enable	06h						
write Disable	04h						
Read Status Register	05h	(S7-S0) (1)					(Note 2)

Not recommended for new designs

Table 8.1 Command Set

Command Name	Byte1 Code	Byte2	Byte3	Byte4	Byte5	Byte6	N-bytes
Write Status Register	01h	S7-S0					
Read Data	03h	A23-A16	A15-A8	A7-A0	(D7-D0)	(Next byte)	continuous
Fast Read	0Bh	A23-A16	A15-A8	A7-A0	dummy	(D7-D0)	(Next byte) continuous
Fast Read Dual Output	3Bh	A23-A16	A15-A8	A7-A0	dummy	I/O= (D6,D4,D2,D0) O= (D7,D5,D3,D1)	(One byte per 4 clocks, continuous)
Page Program	02h	A23-A16	A15-A8	A7-A0	(D7-D0)	(Next byte)	Up to 256 bytes
Block Erase (64 kB)	D8h	A23-A16	A15-A8	A7-A0			
Sector Erase (4 kB)	20h	A23-A16	A15-A8	A7-A0			
Chip Erase	C7h/60h						
Power-down	B9h						
Release Power-down /Device ID	ABh	dummy	dummy	dummy	(ID7-ID0) (4)		
Manufacturer / Device ID (3)	90h	dummy	dummy	00h	(M7-M0)	(ID7-ID0)	
JEDEC ID	9Fh	(M7-M0) manufacturer	(ID15-ID8) Memory Type	(ID7-ID0) Capacity			

Notes:

1. *Data bytes are shifted with Most Significant Bit first. Byte fields with data in parenthesis "( )" indicate data being read from the device on the SO pin.*
2. *The Status Register contents will repeat continuously until CS# terminates the instruction.*
3. *See Table 8.2, Manufacturer and Device Identification on page 11 for Device ID information.*
4. *The Device ID will repeat continuously until CS# terminates the instruction.*

Table 8.2 Manufacturer and Device Identification

OP Code	(M7-M0)	(ID15-ID0)	(ID7-ID0)
ABh			13h
90h	01h		13h
9Fh	01h	4014h	

8.1 Write Enable (06h)

The Write Enable command (Figure 8.1) sets the Write Enable Latch (WEL) bit in the Status Register to a 1, which enables the device to accept a Write Status Register, program, or erase command.

The WEL bit must be set prior to every Page Program, Sector Erase, Block Erase, Chip Erase, and Write Status Register command. The host system must first drive CS# low, write the WREN command, and then drive CS# high.

Not recommended for new designs

Figure 8.1 Write Enable Command Sequence

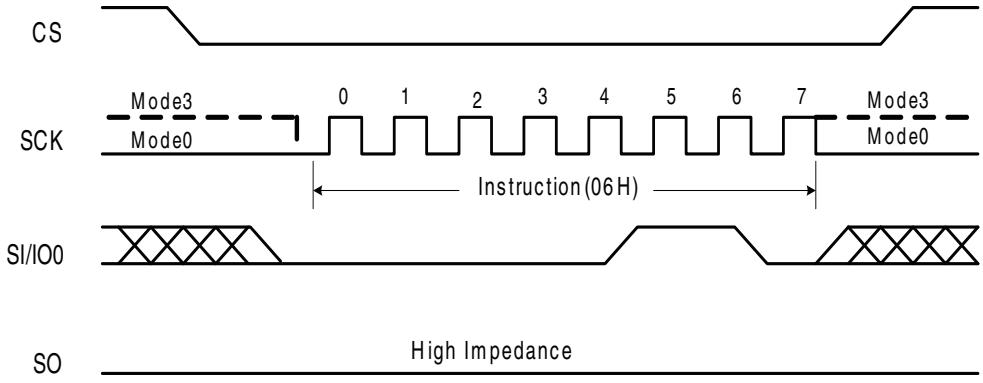

8.2 Write Disable (04h)

The Write Disable command (Figure 8.2) resets the Write Enable Latch (WEL) bit to a 0, which disables the device from accepting a write, program or erase command. The host system must first drive CS# low, write the WRDI command, and then drive CS# high. The WEL bit is automatically reset after Power-up and upon completion of the Write Status Register, Page Program, Sector Erase, Block Erase, and Chip Erase commands.

Figure 8.2 Write Disable Command Sequence

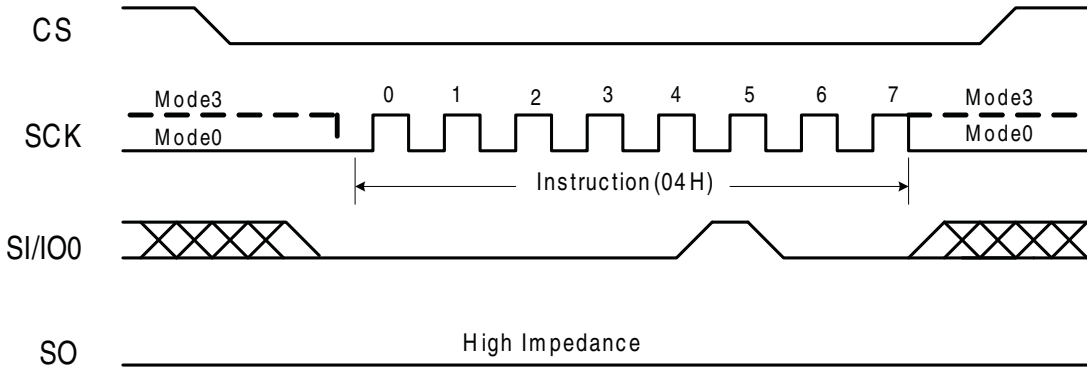

8.3 Read Status Register (05h)

The Read Status Register (RDSR) command outputs the state of the Status Register bits. The RDSR command may be written at any time, even while a program, erase, or Write Registers operation is in progress. The host system should check the Write In Progress (WIP) bit before sending a new command to the device if an operation is already in progress. Figure 8.3 shows the RDSR command sequence, which also shows that it is possible to read the Status Register continuously until CS# is driven high. (See Section 6.4, *Status Register* on page 8).

Not recommended for new designs

Figure 8.3 Read Status Register Command Sequence

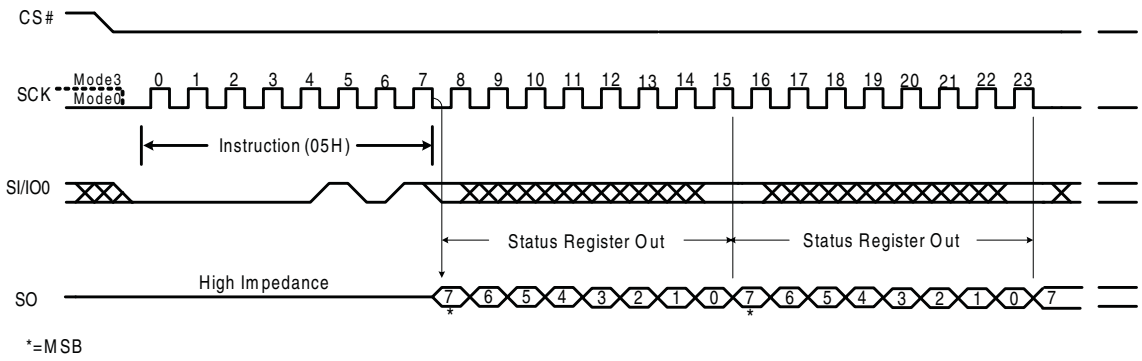

8.4 Write Status Register (01h)

The Write Status Register command allows the Status Register to be written. A Write Enable command must previously have been executed for the device to accept the Write Status Register command (Status Register bit WEL must equal 1). Once write enabled, the command is entered by driving CS# low, sending the instruction code “01h”, and then writing the status register data byte as illustrated in Figure 8.4. The Status Register bits are shown in Table 6.1 on page 8 and described in Section 6.4, *Status Register* on page 8.

Only non-volatile Status Register bits SRP, BP3, BP2, BP1, and BP0 (bits 7, 5, 4, 3, and 2) can be written to. All other Status Register bit locations are read-only and will not be affected by the Write Status Register command.

The CS# chip select input pin must be driven to the logic high state after the eighth bit of data has been latched in. If not, the Write Status Register command is not executed. As soon as the CS# chip select input pin is driven to the logic high state, the self-timed Write Status Register cycle is initiated. While the Write Status Register cycle is in progress, the Status Register may still be read to check the value of the Write In Progress (WIP) bit. The Write In Progress (WIP) bit is a 1 during the self-timed Write Status Register cycle, and is a 0 when it is completed. When the Write Status Register cycle is completed, the Write Enable Latch (WEL) is set to a 0.

The Write Status Register command allows the Block Protect bits (BP3, BP2, BP1, and BP0) to be set for protecting all, a portion, or none of the memory from erase and program commands. Protected areas become read-only (see Table 7.1 on page 9). The Write Status Register command also allows the Status Register Protect bit (SRP) to be set. This bit is used in conjunction with the Write Protect (WP#) pin to disable writes to the status register. When the SRP bit is set to a 0 state (factory default) the WP# pin has no control over the status register. When the SRP pin is set to a 1, the Write Status Register command is locked out while the WP# pin is low. When the WP# pin is high the Write Status Register command is allowed.

Not recommended for new designs

Figure 8.4 Write Status Register Command Sequence

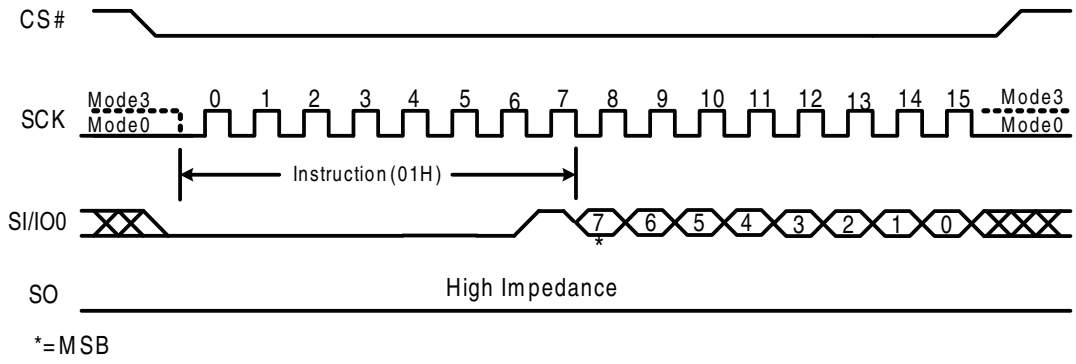

8.5 Read Data (03h)

The Read Data command allows one more data bytes to be sequentially read from the memory. The command is initiated by driving the CS# pin low and then shifting the instruction code “03h” followed by a 24-bit address (A23-A0) into the SI/IO0 pin. The code and address bits are latched on the rising edge of the SCK pin. After the address is received, the data byte of the addressed memory location will be shifted out on the SO pin at the falling edge of SCK with most significant bit (MSB) first. The address is automatically incremented to the next higher address after each byte of data is shifted out allowing for a continuous stream of data. This means that the entire memory can be accessed with a single command as long as the clock continues. The command is completed by driving CS# high.

The Read Data command sequence is shown in Figure 8.5. If a Read Data command is issued while an Erase, Program or Write cycle is in process (WIP=1) the command is ignored and will not have any effects on the current cycle. The Read Data command allows clock rates from D.C. to a maximum of f_R. See *AC Characteristics* on page 27.

Figure 8.5 Read Data Command Sequence

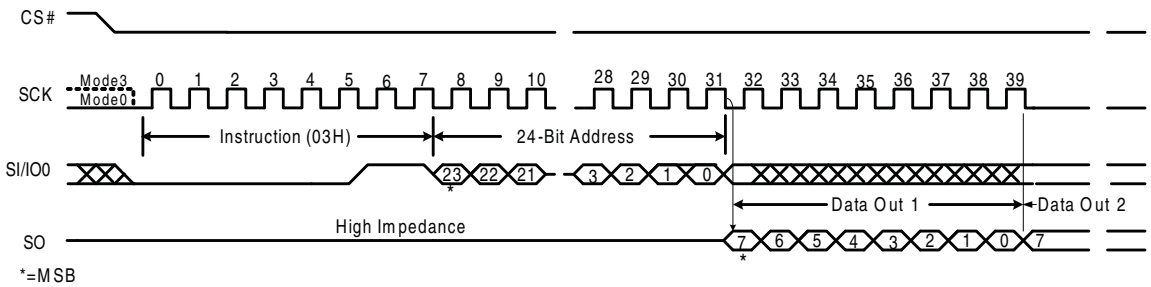

8.6 Fast Read (0Bh)

The Fast Read command is similar to the Read Data command except that it can operate at higher frequency than the traditional Read Data command. See *AC Characteristics* on page 27. This is accomplished by adding eight “dummy” clocks after the 24-bit address as shown in Figure 8.6. The dummy clocks allow the device’s internal circuits additional time for setting up the initial address. During the dummy clocks the data value on the SI pin is a “don’t care”.

Not recommended for new designs

Figure 8.6 Fast Read Command Sequence

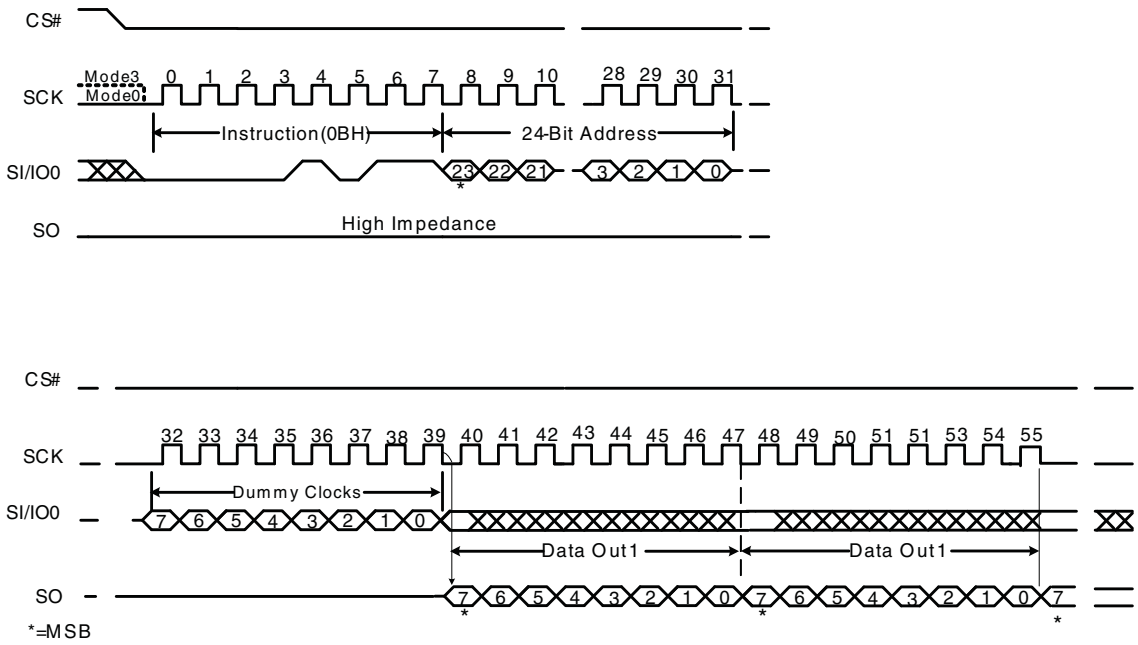

8.7 Fast Read Dual Output (3Bh)

The Fast Read Dual Output (3Bh) command is similar to the standard Fast Read (0Bh) command except that data is output on two pins, SO and SI/IO0, instead of just SO. This allows data to be transferred from the S25FL208K at twice the rate of standard SPI devices. The Fast Read Dual Output command is ideal for quickly downloading code from the SPI flash to RAM upon power-up or for applications that cache code-segments to RAM for execution.

Similar to the Fast Read command, the Fast Read Dual Output command can operate at higher frequencies than the traditional Read Data command. See *AC Characteristics* on page 27. This is accomplished by adding eight “dummy” clocks after the 24-bit address as shown in Figure 8.7. The dummy clocks allow the device's internal circuits additional time for setting up the initial address. The input data during the dummy clocks is “don’t care”. However, the SI/IO0 pin should be high-impedance prior to the falling edge of the first data out clock.

Not recommended for new designs

Figure 8.7 Fast Read Dual Output Command Sequence

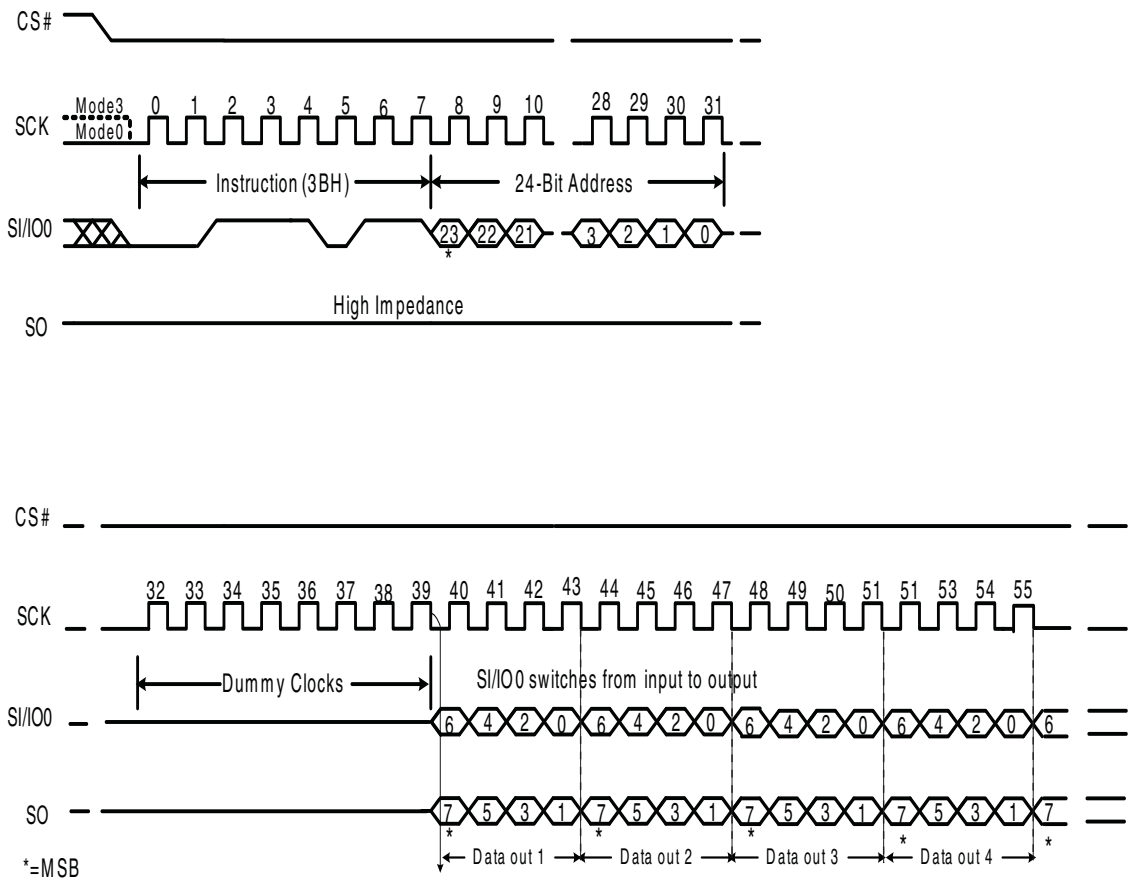

8.8 Page Program (PP) (02h)

The Page Program command allows up to 256 bytes of data to be programmed at previously erased to all 1s (FFh) memory locations. A Write Enable command must be executed before the device will accept the Page Program command (Status Register bit WEL must equal 1). The command is initiated by driving the CS# pin low then shifting the command code “02h” followed by a 24-bit address (A23-A0) and at least one data byte, into the SI/IO0 pin. The CS# pin must be held low for the entire length of the command while data is being sent to the device. The Page Program command sequence is shown in Figure 8.8.

If an entire 256 byte page is to be programmed, the last address byte (the 8 least significant address bits) should be set to 0. If the last address byte is not zero, and the number of clocks exceed the remaining page length, the addressing will wrap to the beginning of the page. In some cases, less than 256 bytes (a partial page) can be programmed without having any effect on other bytes within the same page. One condition to perform a partial page program is that the number of clocks can not exceed the remaining page length. If more than 256 bytes are sent to the device the addressing will wrap to the beginning of the page and overwrite previously sent data.

As with the write and erase commands, the CS# pin must be driven high after the eighth bit of the last byte has been latched. If this is not done the Page Program command will not be executed. After CS# is driven high, the self-timed Page Program command will commence for a time duration of t_{PP}. See *AC Characteristics* on page 27. While the Page Program cycle is in progress, the Read Status Register command may still be accessed for checking the status of the WIP bit. The WIP bit is a 1 during the Page Program cycle and becomes a 0 when the cycle is finished and the device is ready to accept other commands again. After the Page Program cycle has finished the Write Enable Latch (WEL) bit in the Status Register is cleared to 0. The Page Program command will not be executed if the addressed page is protected by the Block Protect (BP3, BP2, BP1, and BP0) bits (see Table 7.1 on page 9).

Not recommended for new designs

Figure 8.8 Page Program Command Sequence

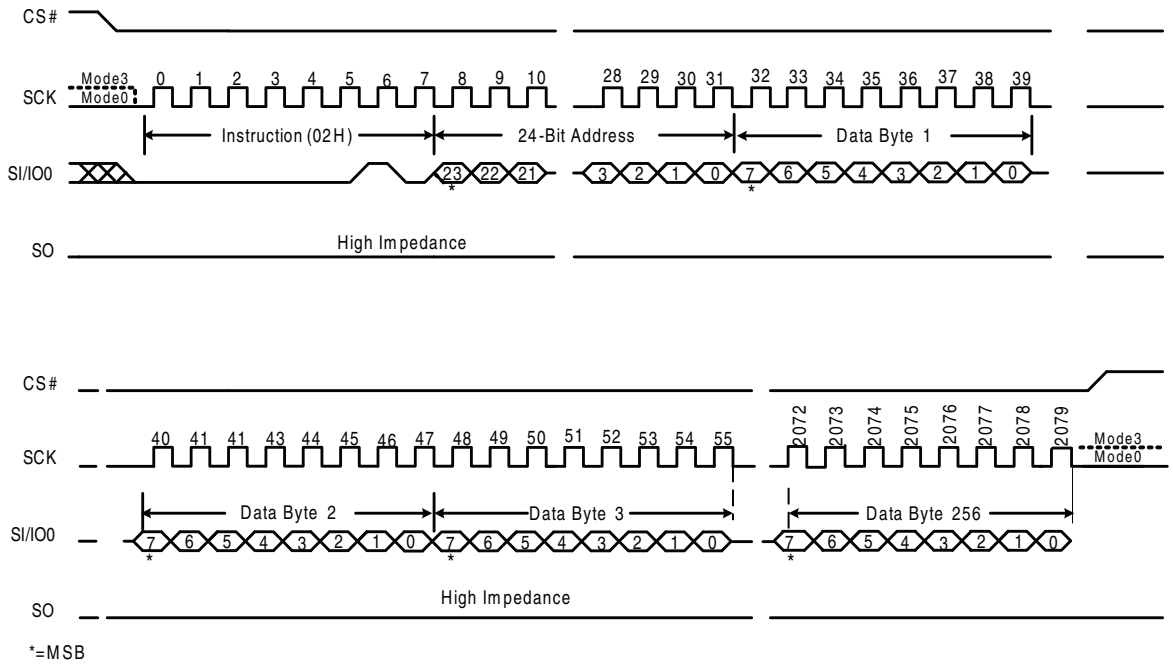

8.9 Sector Erase (SE) (20h)

The Sector Erase command sets all bits in the addressed 4 kB sector to 1 (all bytes are FFh). Before the Sector Erase command can be accepted by the device, a Write Enable command must be issued and decoded by the device, which sets the Write Enable Latch bit in the Status Register to enable any write operations. The command is initiated by driving the CS# pin low and shifting the command code “20h” followed by a 24-bit sector address (A23-A0). The Sector Erase command sequence is shown in Figure 8.9.

The CS# pin must be driven high after the eighth bit of the last byte has been latched. If this is not done the Sector Erase command will not be executed. After CS# is driven high, the self-timed Sector Erase command will commence for a time duration of t_{SE}. See *AC Characteristics* on page 27. While the Sector Erase cycle is in progress, the Read Status Register command may still be accessed for checking the status of the WIP bit. The WIP bit is a 1 during the Sector Erase cycle and becomes a 0 when the cycle is finished and the device is ready to accept other commands again. After the Sector Erase cycle has finished the Write Enable Latch (WEL) bit in the Status Register is cleared to 0. The Sector Erase command will not be executed if the addressed page is protected by the Block Protect (BP3, BP2, BP1, and BP0) bits (see Table 7.1 on page 9).

Not recommended for new designs

Figure 8.9 Sector Erase Command Sequence

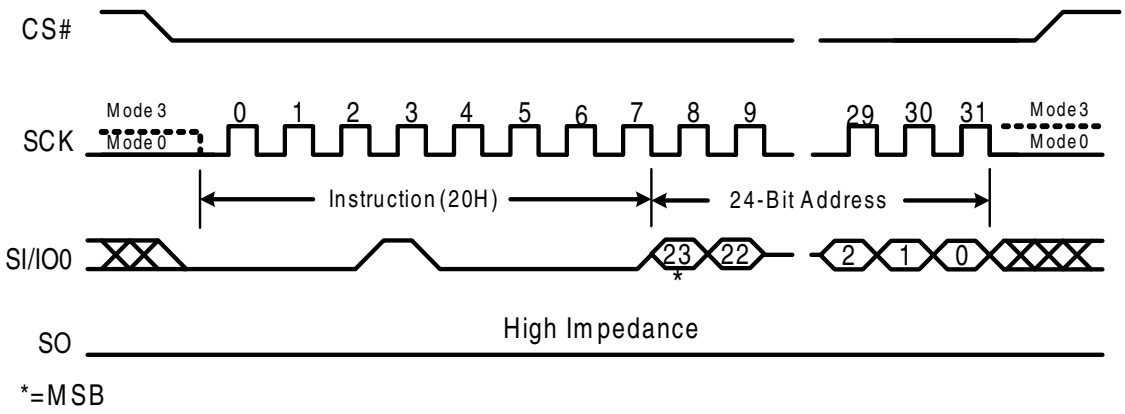

8.10 Block Erase (BE) (D8h)

The Block Erase command sets all bits in the addressed 64 kB block to 1 (all bytes are FFh). Before the BE command can be accepted by the device, a Write Enable command must be issued and decoded by the device, which sets the Write Enable Latch in the Status Register to enable any write operations. The command is initiated by driving the CS# pin low and shifting the command code “D8h” followed a 24-bit block address (A23-A0) (see Figure 2). The Block Erase command sequence is shown in Figure 8.10.

The CS# pin must be driven high after the eighth bit of the last byte has been latched. If this is not done the Block Erase command will not be executed. After CS# is driven high, the self-timed Block Erase command will commence for a time duration of t_{BE}. See *AC Characteristics* on page 27. While the Block Erase cycle is in progress, the Read Status Register command may still be accessed for checking the status of the WIP bit. The WIP bit is a 1 during the Block Erase cycle and becomes a 0 when the cycle is finished and the device is ready to accept other commands again. After the Block Erase cycle has finished the Write Enable Latch (WEL) bit in the Status Register is cleared to 0. The Block Erase command will not be executed if the addressed page is protected by the Block Protect (BP3, BP2, BP1, and BP0) bits (see Table 7.1 on page 9).

Figure 8.10 Block Erase Command Sequence

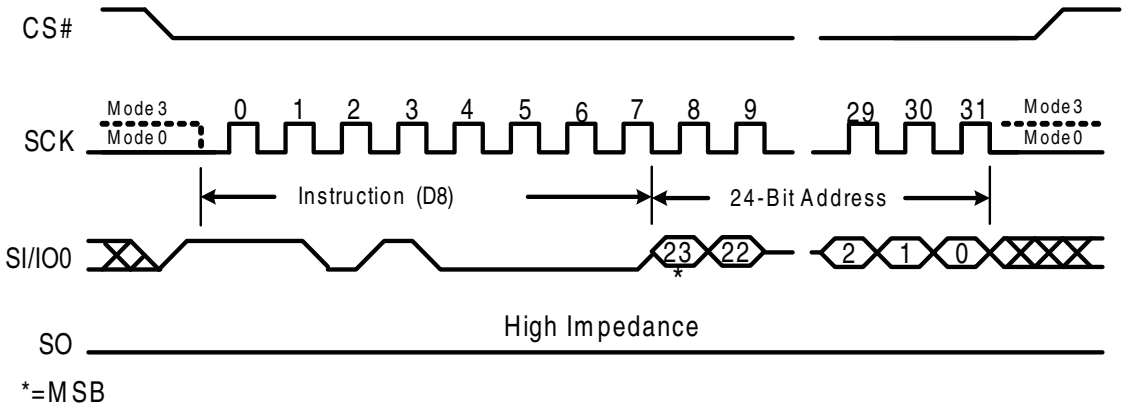

8.11 Chip Erase (CE) (C7h)

The Chip Erase command sets all bits to 1 (all bytes are FFh) inside the entire flash memory array. Before the CE command can be accepted by the device, a Write Enable command must be issued and decoded by the device, which sets the Write Enable Latch in the Status Register to enable any write operations. The command is initiated by driving the CS# pin low and shifting the command code “C7h”. The Chip Erase command sequence is shown in Figure 8.11.

Not recommended for new designs

The CS# pin must be driven high after the eighth bit has been latched. If this is not done the Chip Erase command will not be executed. After CS# is driven high, the self-timed Chip Erase command will commence for a time duration of t_{CE}. See *AC Characteristics* on page 27. While the Chip Erase cycle is in progress, the Read Status Register command may still be accessed to check the status of the WIP bit. The WIP bit is a 1 during the Chip Erase cycle and becomes a 0 when finished and the device is ready to accept other commands again. After the Chip Erase cycle has finished the Write Enable Latch (WEL) bit in the Status Register is cleared to 0. The Chip Erase command will not be executed if any page is protected by the Block Protect (BP3,BP2, BP1, and BP0) bits (see Table 7.1 on page 9).

Figure 8.11 Chip Erase Command Sequence

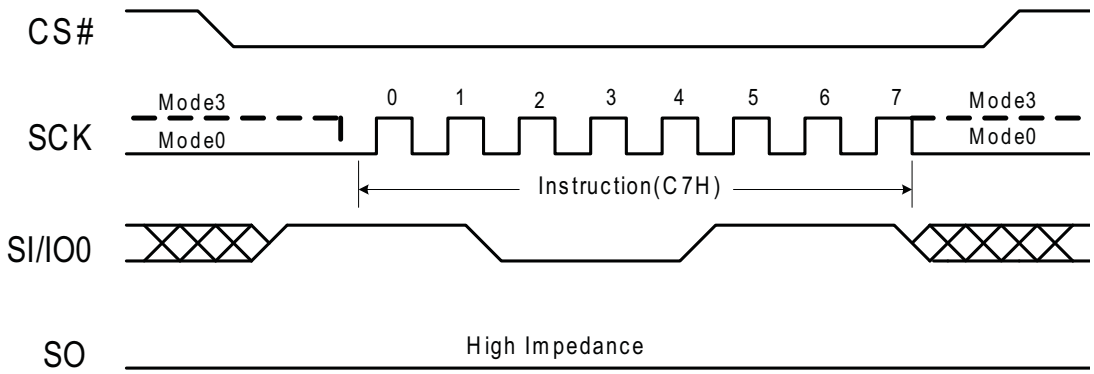

8.12 Deep Power-down (DP) (B9h)

The Deep Power-Down (DP) command provides the lowest power consumption mode of the device. It is intended for periods when the device is not in active use, and ignores all commands except for the Release from Deep Power-Down (RES) command. The lower power consumption makes the Deep Power-down command especially useful for battery powered applications (See I_{CC1} and I_{CC2} in *DC Characteristics* on page 26.) The command is initiated by driving the CS# pin low and shifting the command code “B9h” as shown in Figure 8.12.

The CS# pin must be driven high after the eighth bit has been latched. If this is not done the Deep Power-down command will not be executed. After CS# is driven high, the power-down state will enter within the time duration of t_{DP} (See *AC Characteristics* on page 27.) While in the power-down state only the Release from Power-down / Device ID command, which restores the device to normal operation, will be recognized. All other commands are ignored. This includes the Read Status Register command, which is always available during normal operation. The Deep Power-down mode therefore provides the maximum data protection against unintended write operations. Deep Power-down mode automatically terminates when power is removed, and the device always powers up in the standard standby mode. The device rejects any Deep Power-down command issued while it is executing a program, erase, or Write Registers operation, and continues the operation uninterrupted.

Not recommended for new designs

Figure 8.12 Deep Power-down Command Sequence

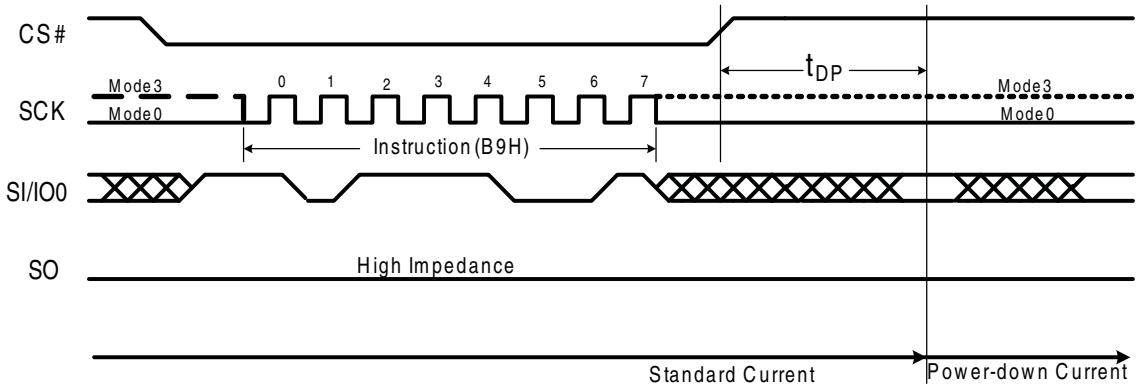

8.13 Release Deep Power-down / Device ID (ABh)

The Release from Deep Power-down / Device ID command is a multi-purpose command. The device requires the Release from Deep Power-down command to exit the Deep Power-down mode. When the device is in the Deep Power-down mode, all commands except Release from Deep Power-down command are ignored. In addition, the ABh command can also be used to read the device's 8-bit electronic Device ID.

When used only to release the device from the power-down state, the command is issued by driving the CS# pin low, shifting the command code “ABh” and driving CS# high as shown in Figure 8.13. After the time duration of t_{RES1} (See *AC Characteristics* on page 27.) the device will resume normal operation and other commands will be accepted. The CS# pin must remain high during the t_{RES1} time duration.

When used only to obtain the Device ID while not in the Deep power-down state, the command is initiated by driving the CS# pin low and shifting the command code “ABh” followed by 3-dummy bytes. The Device ID bits are then shifted out on the falling edge of SCK with most significant bit (MSB) first as shown in Figure 8.14. The Device ID value for the S25FL208K is listed in Manufacturer and Device Identification table. The Device ID can be read continuously. The command is completed by driving CS# high.

When used to release the device from the Deep power-down state and obtain the Device ID, the command is the same as previously described, and shown in Figure 8.14, except that after CS# is driven high it must remain high for a time duration of t_{RES2} (See *AC Characteristics* on page 27.). After this time duration the device will resume normal operation and other commands will be accepted. If the Release from Deep Power-down / Device ID command is issued while an Erase, Program or Write cycle is in process (when WIP equals 1) the command is ignored and will not have any effects on the current cycle.

Figure 8.13 Release Deep Power-down Command

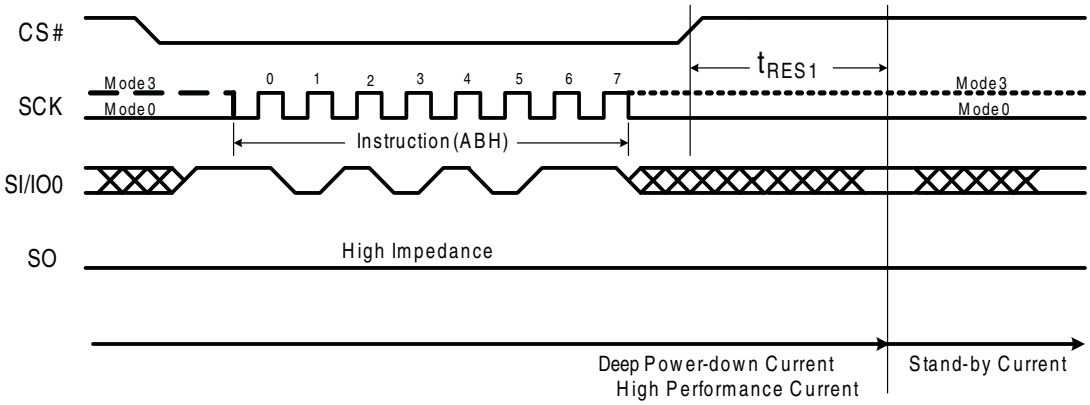

Not recommended for new designs

Figure 8.14 Release Deep Power-down / Device ID Command Sequence

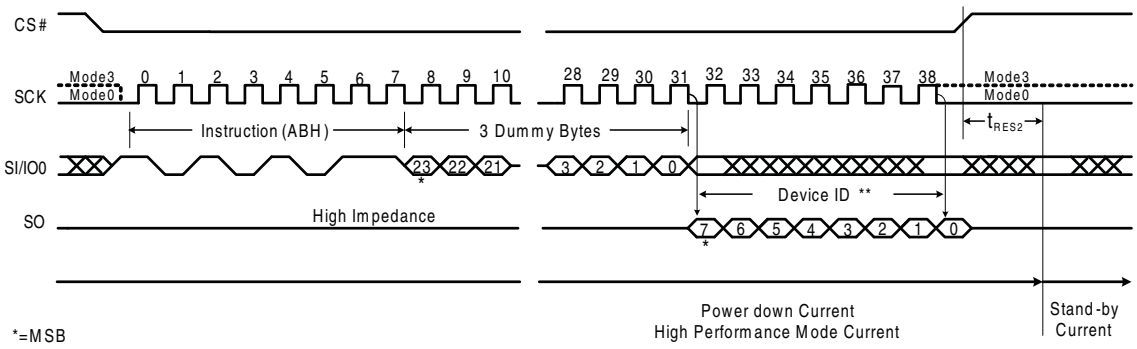

8.14 Read Manufacturer / Device ID (90h)

The Read Manufacturer/Device ID command is an alternative to the Release from Deep Power-down /Device ID command that provides both the JEDEC assigned manufacturer ID and the specific device ID.

The Read Manufacturer/Device ID command is very similar to the Release from Deep Power-down / Device ID command. The command is initiated by driving the CS# pin low and shifting the command code “90h” followed by a 24-bit address (A23-A0) of 000000h. After which, the Manufacturer ID for Spansion (01h) and the Device ID are shifted out on the falling edge of SCK with most significant bit (MSB) first as shown in Figure 8.15. The Device ID values for the S25FL208K are listed in Table 8.2 on page 11. If the 24-bit address is initially set to 000001h the Device ID will be read first, followed by the Manufacturer ID.

Not recommended for new designs

Figure 8.15 Read Manufacturer / Device ID Command Sequence

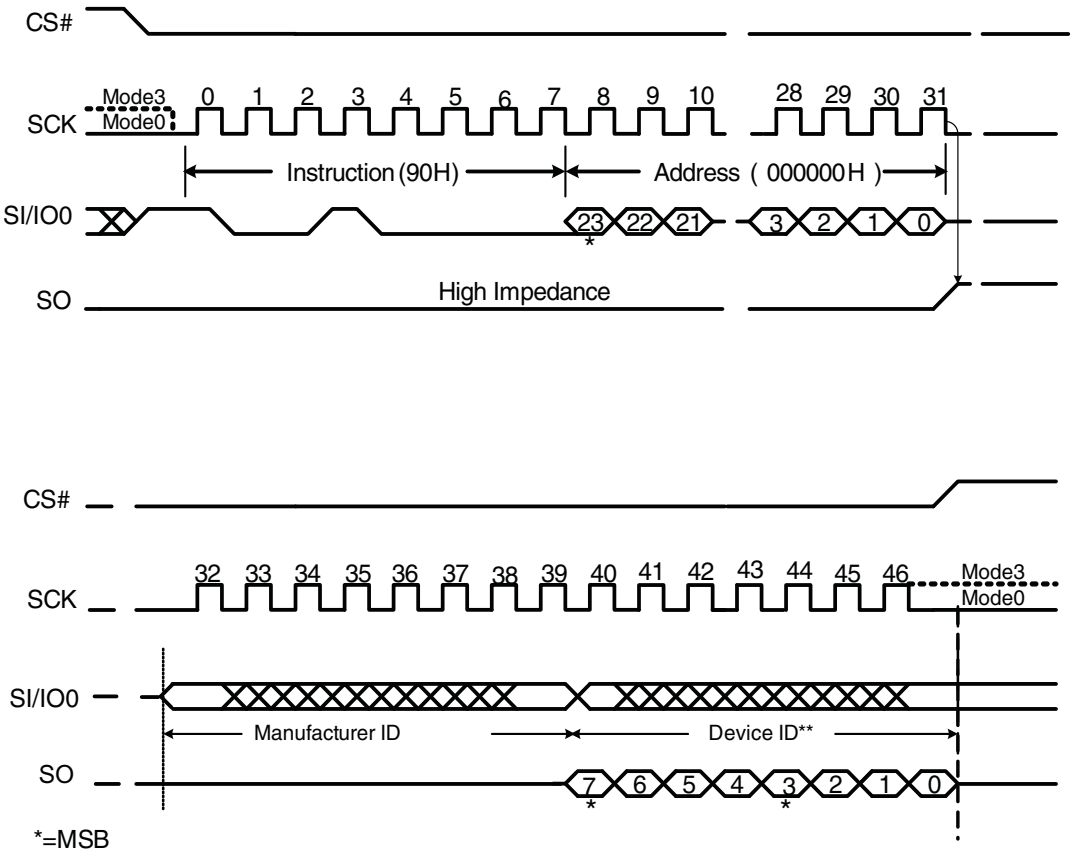

8.15 Read Identification (RDID) (9Fh)

For compatibility reasons, the S25FL208K provides several commands to electronically determine the identity of the device. The Read JEDEC ID command is compatible with the JEDEC standard for SPI compatible serial memories that was adopted in 2003.

The command is initiated by driving the CS# pin low and shifting the command code “9Fh”. The JEDEC assigned Manufacturer ID byte for Spansion (01h) and two Device ID bytes, Memory Type (ID15-ID8) and Capacity (ID7-ID0) are then shifted out on the falling edge of SCK with most significant bit (MSB) first as shown in Figure 8.16. For memory type and capacity values refer to Table 8.2, *Manufacturer and Device Identification* on page 11.

Not recommended for new designs

Figure 8.16 Read JEDEC ID Command Sequence

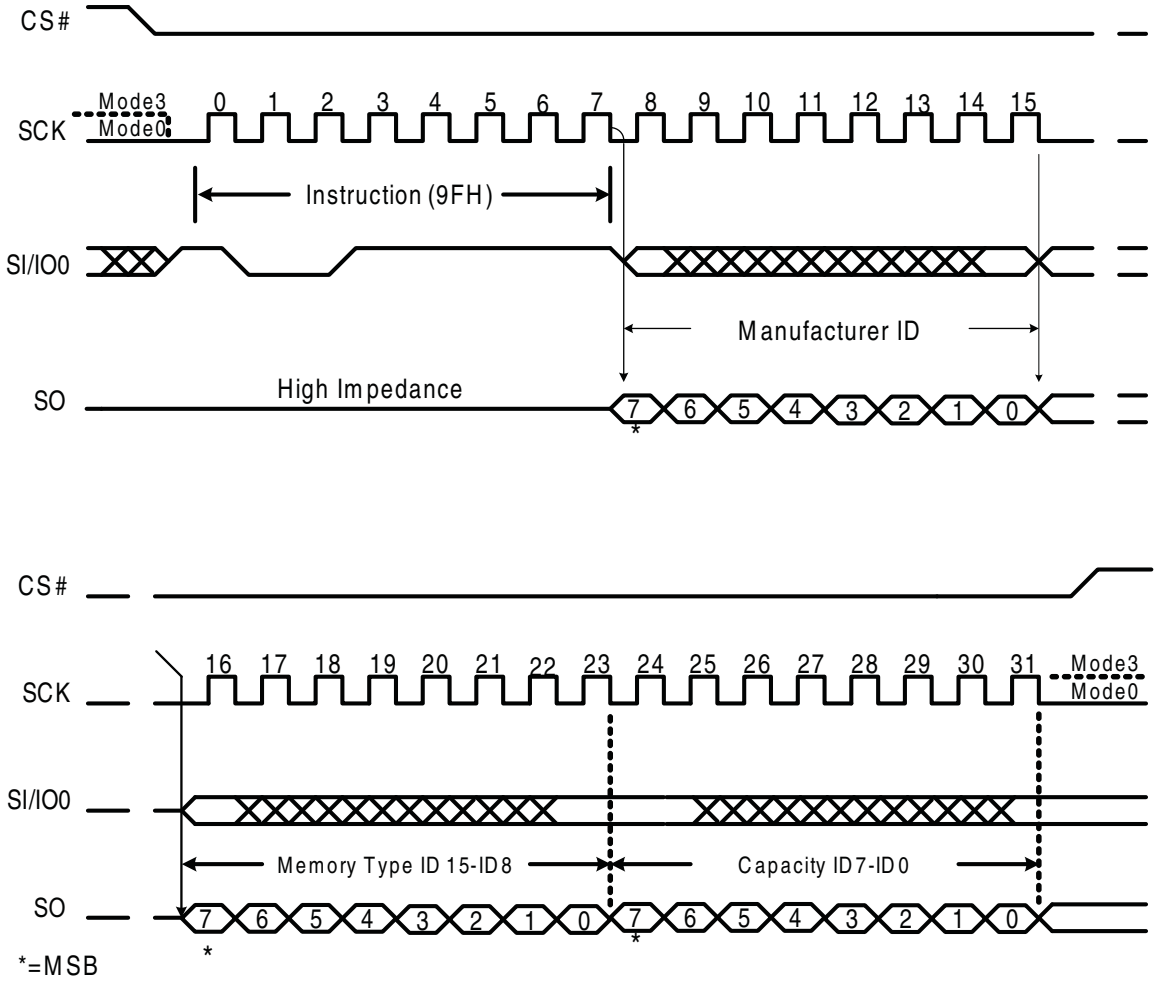

Not recommended for new designs

9. Electrical Specifications

9.1 Power-up Timing

Figure 9.1 Power-up Timing

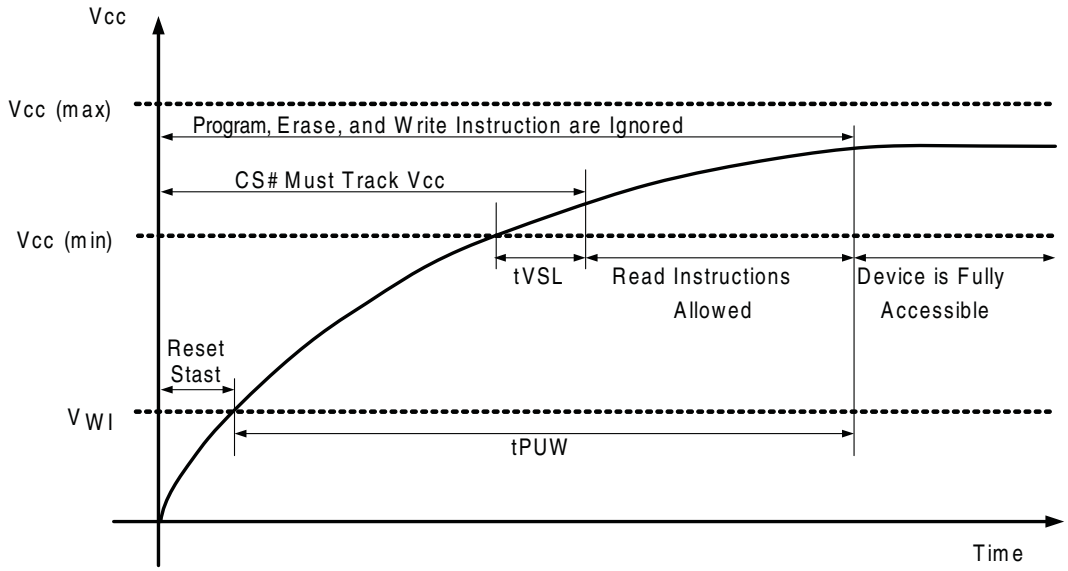

Table 9.1 Power-up Voltage and Timing

Parameter	Symbol	Type		Unit
		Min	Max	
V_{CC} (min) to CS# Low	t_{VSL} (1)	10		µs
Time Delay Before Write Instruction	t_{PUW} (1)	1	10	ms
Write Inhibit Threshold Voltage	V_{WI} (1)	1	2	V

Notes:

1. *The parameters are characterized only.*
2. *V_{CC} (max.) is 3.6V and V_{CC} (min.) is 2.7V.*

Not recommended for new designs

9.2 Absolute Maximum Ratings

Stresses above the values so mentioned above may cause permanent damage to the device. These values are for a stress rating only and do not imply that the device should be operated at conditions up to or above these values.

Table 9.2 Absolute Maximum Ratings

Parameters	Symbol	Conditions	Range	Unit
Supply Voltage	V_{CC}		-0.6 to +4.0	V
Voltage applied on any pin	V_{IO}	Relative to Ground	-0.6 to V_{CC}+0.4	V
Transient Voltage on any Pin	V_{IOT}	<20 ns Transient Relative to Ground	-2.0 to V_{CC}+2.0	V
Storage Temperature	T_{STG}		-65 to +150	°C
Lead Temperature	T_{LEAD}		(Note 3)	°C

Notes:

1. *Specification for S25FL208K is Advance Information. See Advance Information designation at the beginning of this document.*
2. *This device has been designed and tested for the specified operation ranges. Proper operation outside of these levels is not guaranteed. Exposure to absolute maximum ratings may affect device reliability. Exposure beyond absolute maximum ratings may cause permanent damage.*
3. *Compliant with JEDEC Standard J-STD-20C for small body Sn-Pb or Pb-free (Green) assembly and the European directive on restrictions on hazardous substances (RoHS) 2002/95/EU.*

9.3 Recommended Operating Ranges

Table 9.3 Recommended Operating Ranges

Parameter	Symbol	Conditions	Spec		Unit
			Min	Max	
Supply Voltage	V_{CC}	F_R = 76 MHz, f_R = 44 MHz	2.7	3.6	V
Ambient Temperature, Operating	T_A	Industrial	-40	+85	°C

Note:

1. *Recommended Operating Ranges define those limits between which the functionality of the device is guaranteed.*

Not recommended for new designs

9.4 DC Characteristics

This section summarizes the DC Characteristics of the device. Designers should check that the operating conditions in their circuit match the measurement conditions specified in the AC Measurement Conditions in Table 9.6 on page 27, when relying on the quoted parameters.

Table 9.4 DC Characteristics

Symbol (Notes)	Parameter (Notes)	Conditions (Notes)	Spec			Unit
			Min	Typ	Max	
C_{IN} (1)	Input Capacitance	V_{IN} = 0V (2)			6	pF
C_{OUT} (1)	Output Capacitance	V_{OUT} = 0V (2)			8	pF
I_{LI}	Input Leakage				±2	µA
I_{LO}	I/O Leakage				±2	µA
I_{CC1}	Standby Current	CS# = V_{CC}, V_{IN} = GND or V_{CC}		15	35	µA
I_{CC2}	Power-down Current	CS# = V_{CC}, V_{IN} = GND or V_{CC}		15	32	µA
I_{CC3}	Current Read Data / Dual Output Read 33 MHz (2)	C = 0.1 V_{CC} / 0.9 V_{CC} SO = Open		10/12	15/18	mA
I_{CC3}	Current Read Data / Dual Output Read 100 MHz (2)	C = 0.1 V_{CC} / 0.9 V_{CC} SO = Open			25	mA
I_{CC4}	Current Page Program	CS# = V_{CC}		15	20	mA
I_{CC5}	Current Write Status Register	CS# = V_{CC}		10	18	mA
I_{CC6}	Current Sector/Block Erase	CS# = V_{CC}		20	25	mA
I_{CC7}	Current Chip Erase	CS# = V_{CC}		20	25	mA
V_{IL}	Input Low Voltage		-0.5		V_{CC} x 0.3	V
V_{IH}	Input High Voltage		V_{CC} x0.7		V_{CC} +0.4	V
V_{OL}	Output Low Voltage	I_{OL} = 1.6 mA			0.4	V
V_{OH}	Output High Voltage	I_{OH} = -100 µA	V_{CC} -0.2			V

Notes:

1. *Tested on sample basis and specified through design and characterization data. T_A=25°C, V_{CC} 3V.*
2. *Checker Board Pattern.*

9.5 AC Measurement Conditions

Table 9.5 AC Measurement Conditions

Symbol	Parameter	Min	Max	Unit
C_L	Load Capacitance		30	pF
T_R, T_F	Input Rise and Fall Times		5	ns
V_{IN}	Input Pulse Voltages	0.2 V_{CC} to 0.8 V_{CC}		V
VtIN	Input Timing Reference Voltages	0.3 V_{CC} to 0.7 V_{CC}		V
VtON	Output Timing Reference Voltages	0.5 V_{CC} to 0.5 V_{CC}		V

Not recommended for new designs

Figure 9.2 AC Measurement I/O Waveform

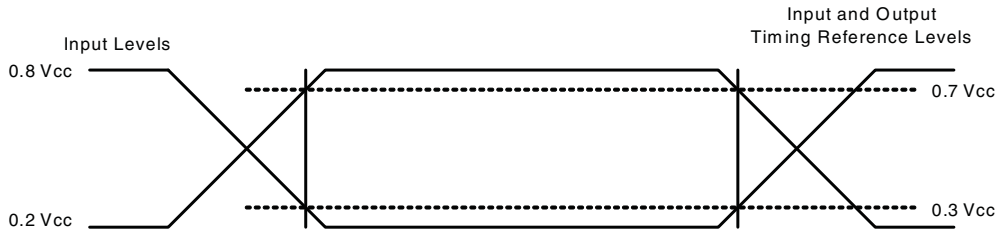

9.6 AC Characteristics

Table 9.6 AC Characteristics (Sheet 1 of 2)

Symbol (Notes)	Alt	Parameter (Notes)	Spec			Unit
			Min	Typ	Max	
F_R	f_C	Clock frequency For all instructions, except Read Data (03h) and Dual output (3Bh)	D.C.		76	MHz
		Clock frequency For dual output (3Bh)			76	MHz
f_R		Clock freq. Read Data instruction (03h)	D.C.		44	MHz
t_{CLH}, t_{CLL} (1)		Clock High, Low Time for all instructions except Read Data (03h)	4			ns
t_{CRLH}, t_{CRLL} (1)		Clock High, Low Time for Read Data (03h) instruction	4			ns
t_{CLCH} (2)		Clock Rise Time peak to peak	0.1			V/ns
t_{CHCL} (2)		Clock Fall Time peak to peak	0.1			V/ns
t_{SLCH}	t_{CSS}	CS# Active Setup Time relative to SCK	7			ns
t_{CHSL}		CS# Not Active Hold Time relative to SCK	5			ns
t_{DVCH}	t_{DSU}	Data In Setup Time	2			ns
t_{CHDX}	t_{DH}	Data In Hold Time	5			ns
t_{CHSH}		CS# Active Hold Time relative to SCK	3			ns
t_{SHCH}		CS# Not Active Setup Time relative to SCK	5			ns
t_{SHSL}	t_{CSH}	CS# Deselect Time (for Array Read 'Array Read / Erase or Program ' Read Status Register)	50/100			ns
t_{SHQZ} (2)	t_{DIS}	Output Disable Time			6	ns
t_{CLQV}	t_V	Clock Low to Output Valid			10	ns
t_{CLQX}	t_{HO}	Output Hold Time	0			ns
t_{HLCH}		HOLD# Active Setup Time relative to SCK	5			ns
t_{CHHH}		HOLD# Active Hold Time relative to SCK	5			ns
t_{HHCH}		HOLD# Not Active Setup Time relative to SCK	5			ns
t_{CHHL}		HOLD# Not Active Hold Time relative to SCK	5			ns
t_{HHQX} (2)	t_{LZ}	HOLD# to Output Low-Z			7	ns
t_{HLQZ} (2)	t_{HZ}	HOLD# to Output High-Z			12	ns
t_{WHSL} (3)		Write Protect Setup Time Before CS# Low	20			ns
t_{SHWL} (3)		Write Protect Hold Time After CS# High	100			ns
t_{DP} (2)		CS# High to Power-down Mode			3	µs
t_{RES1} (2)		CS# High to Standby Mode without Electronic Signature Read			3	µs
t_{RES2} (2)		CS# High to Standby Mode with Electronic Signature Read			1.8	µs

Not recommended for new designs

Table 9.6 AC Characteristics (Sheet 2 of 2)

Symbol (Notes)	Alt	Parameter (Notes)	Spec			Unit
			Min	Typ	Max	
t_W		Write Status Register Time		10	15	ms
t_{BP1}		Byte Program Time (First Byte) (4)		30	50	µs
t_{BP2}		Additional Byte Program Time (After First Byte) (4)		6	12	µs
t_{PP}		Page Program Time		1.5	5	ms
t_{SE}		Sector Erase Time (4 kB)		50	300	ms
t_{BE} (5)		Block Erase Time (64 kB)		0.5	2	s
t_{CE} (6)		Chip Erase Time		7	15	s

Notes:

1. *Clock high + Clock low must be less than or equal to $1/f_C$.*
2. *Value guaranteed by design and/or characterization, not 100% tested in production.*
3. *Only applicable as a constraint for a Write Status Register instruction when Sector Protect Bit is set to 1.*
4. *For multiple bytes after first byte within a page, $t_{BPN} = t_{BP1} + t_{BP2} * N$ (typical) and $t_{BPN} = t_{BP1} + t_{BP2} * N$ (max), where N = number of bytes programmed.*
5. *Max value shown is for less than 10k cycles. For greater than 10k cycles, max value is 5.3s.*
6. *Max value shown is for less than 10k cycles. For greater than 10k cycles, max value is 18s.*

Figure 9.3 Serial Output Timing

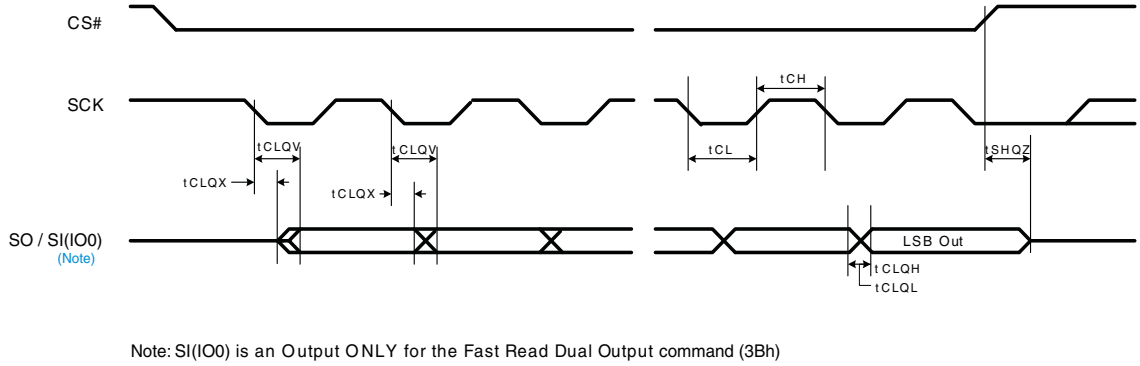

Figure 9.4 Input Timing

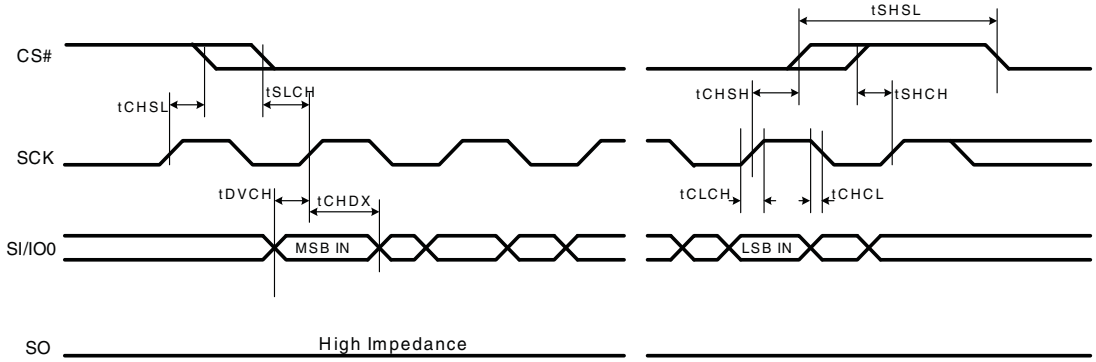

Not recommended for new designs

Figure 9.5 Hold Timing

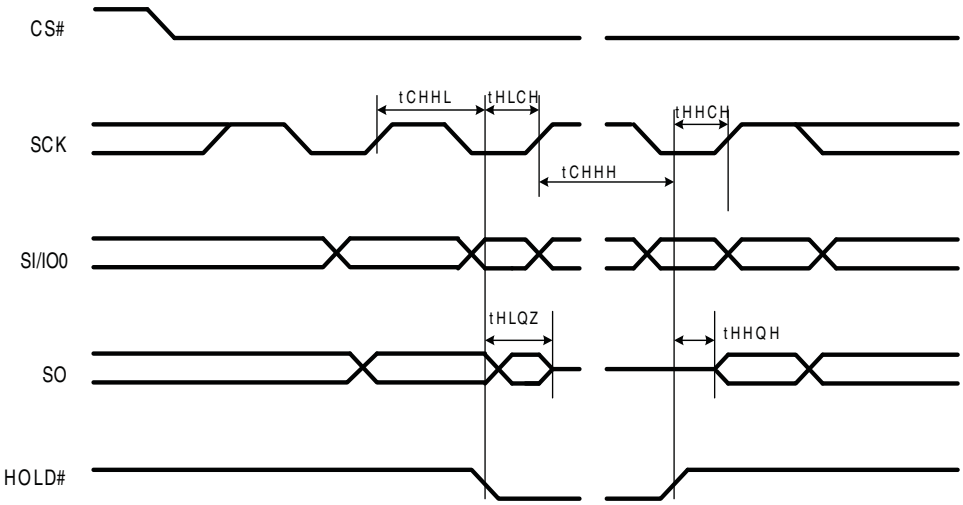

Not recommended for new designs

10. Package Material

10.1 8-Pin SOIC 150-mil Package (SOA 008)

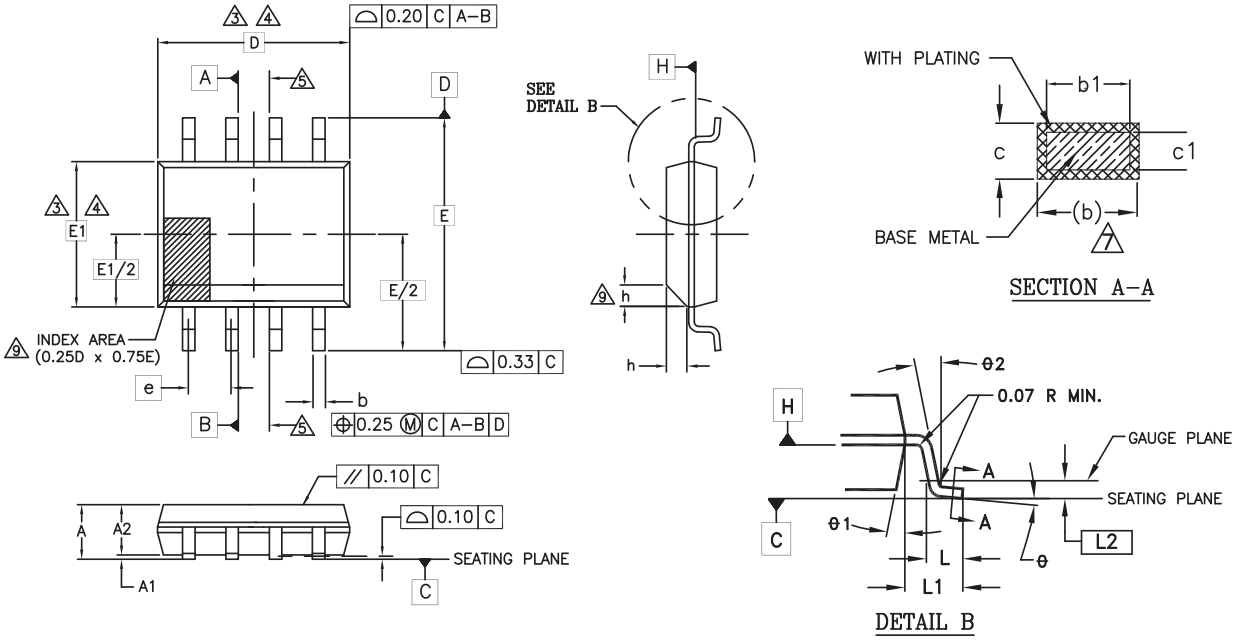

PACKAGE	SOA 008(INCHES)		SOA 008(MM)	
JEDEC	MS-012(D)AA		MS-012(D)AA	
SYMBOL	MIN	MAX	MIN	MAX
A	0.0531	0.0688	1.35	1.75
A1	0.0039	0.0098	0.10	0.25
A2	0.052	0.061	1.32	1.55
b	0.012	0.020	0.31	0.51
b1	0.011	0.019	0.27	0.48
c	0.0067	0.0098	0.17	0.25
c1	0.0067	0.009	0.17	0.23
D	0.193 BSC		4.90 BSC	
E	0.236 BSC		6.00 BSC	
E1	0.1535 BSC		3.90 BSC	
e	0.050 BSC		1.27 BSC	
L	0.0161	0.035	0.41	0.89
L1	0.041 REF		1.04 REF	
L2	0.010 BSC		0.25 BSC	
N	8		8	
h	0.10	0.196	0.25	0.50
θ	0°	8°	0°	8°
θ1	5°	15°	5°	15°
θ2	0° REF		0° REF	

NOTES:

1. ALL DIMENSIONS ARE IN BOTH INCHES AND MILLMETERS.
2. DIMENSIONING AND TOLERANCING PER ASME Y14.5M - 1994.
3. DIMENSION D DOES NOT INCLUDE MOLD FLASH, PROTRUSIONS OR GATE BURRS. MOLD FLASH, PROTRUSIONS OR GATE BURRS SHALL NOT EXCEED 0.15 mm PER END. DIMENSION E1 DOES NOT INCLUDE INTERLEAD FLASH OR PROTRUSION. INTERLEAD FLASH OR PROTRUSION SHALL NOT EXCEED 0.25 mm PER SIDE. D AND E1 DIMENSIONS ARE DETERMINED AT DATUM H.
4. THE PACKAGE TOP MAY BE SMALLER THAN THE PACKAGE BOTTOM. DIMENSIONS D AND E1 ARE DETERMINED AT THE OUTMOST EXTREMES OF THE PLASTIC BODY EXCLUSIVE OF MOLD FLASH, TIE BAR BURRS, GATE BURRS AND INTERLEAD FLASH. BUT INCLUDING ANY MISMATCH BETWEEN THE TOP AND BOTTOM OF THE PLASTIC BODY.
5. DATUMS A AND B TO BE DETERMINED AT DATUM H.
6. "N" IS THE MAXIMUM NUMBER OF TERMINAL POSITIONS FOR THE SPECIFIED PACKAGE LENGTH.
7. THE DIMENSIONS APPLY TO THE FLAT SECTION OF THE LEAD BETWEEN 0.10 TO 0.25 mm FROM THE LEAD TIP.
8. DIMENSION "b" DOES NOT INCLUDE DAMBAR PROTRUSION. ALLOWABLE DAMBAR PROTRUSION SHALL BE 0.10 mm TOTAL IN EXCESS OF THE "b" DIMENSION AT MAXIMUM MATERIAL CONDITION. THE DAMBAR CANNOT BE LOCATED ON THE LOWER RADIUS OF THE LEAD FOOT.
9. THIS CHAMFER FEATURE IS OPTIONAL. IF IT IS NOT PRESENT, THEN A PIN 1 IDENTIFIER MUST BE LOCATED WITHIN THE INDEX AREA INDICATED.
10. LEAD COPLANARITY SHALL BE WITHIN 0.10 mm AS MEASURED FROM THE SEATING PLANE.

g1019 \ 16-038.3f \ 10.06.11

Not recommended for new designs

10.2 8-Pin SOIC 208-mil Package (SOC 008)

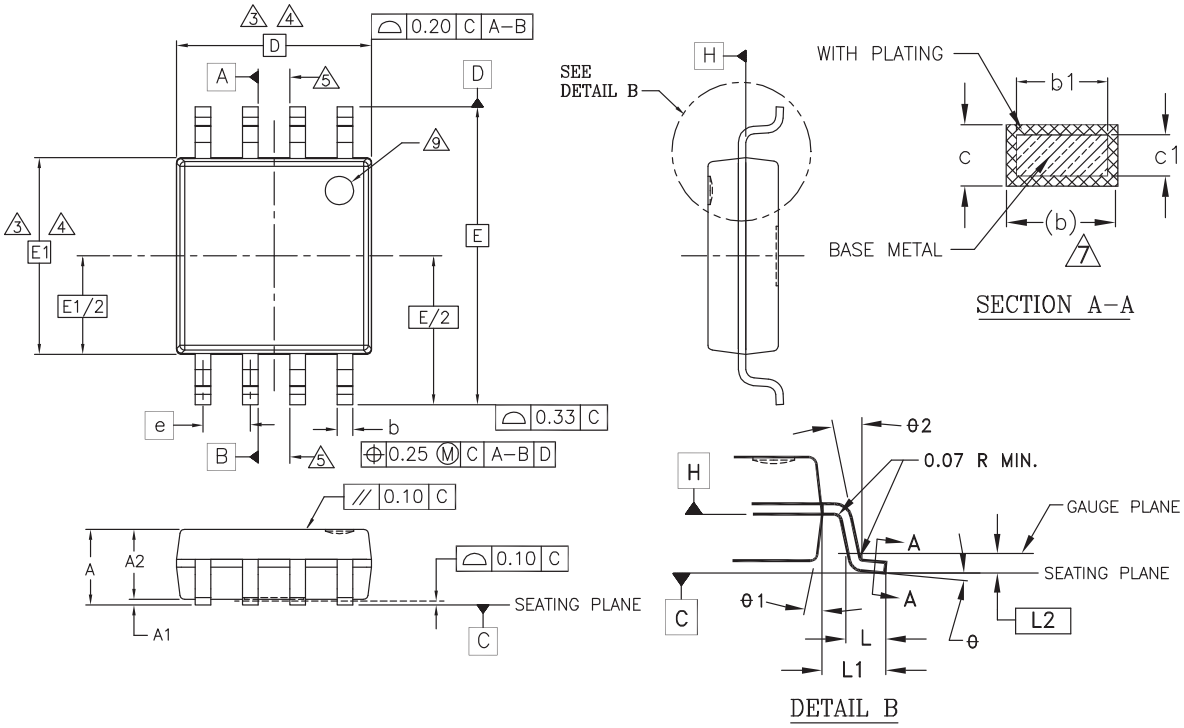

PACKAGE	SOC 008 (inches)		SOC 008 (mm)	
JEDEC				
SYMBOL	MIN	MAX	MIN	MAX
A	0.069	0.085	1.753	2.159
A1	0.002	0.0098	0.051	0.249
A2	0.067	0.075	1.70	1.91
b	0.014	0.019	0.356	0.483
b1	0.013	0.018	0.330	0.457
c	0.0075	0.0095	0.191	0.241
c1	0.006	0.008	0.152	0.203
D	0.208 BSC		5.283 BSC	
E	0.315 BSC		8.001 BSC	
E1	0.208 BSC		5.283 BSC	
e	.050 BSC		1.27 BSC	
L	0.020	0.030	0.508	0.762
L1	.049 REF		1.25 REF	
L2	.010 BSC		0.25 BSC	
N	8		8	
θ	0°	8°	0°	8°
θ1	5°	15°	5°	15°
θ2	0°		0°	

NOTES:

1. ALL DIMENSIONS ARE IN BOTH INCHES AND MILLMETERS.
2. DIMENSIONING AND TOLERANCING PER ASME Y14.5M - 1994.
3. DIMENSION D DOES NOT INCLUDE MOLD FLASH, PROTRUSIONS OR GATE BURRS. MOLD FLASH, PROTRUSIONS OR GATE BURRS SHALL NOT EXCEED 0.15 mm PER END. DIMENSION E1 DOES NOT INCLUDE INTERLEAD FLASH OR PROTRUSION INTERLEAD FLASH OR PROTRUSION SHALL NOT EXCEED 0.25 mm PER SIDE. D AND E1 DIMENSIONS ARE DETERMINED AT DATUM H.
4. THE PACKAGE TOP MAY BE SMALLER THAN THE PACKAGE BOTTOM. DIMENSIONS D AND E1 ARE DETERMINED AT THE OUTMOST EXTREMES OF THE PLASTIC BODY EXCLUSIVE OF MOLD FLASH, TIE BAR BURRS, GATE BURRS AND INTERLEAD FLASH. BUT INCLUDING ANY MISMATCH BETWEEN THE TOP AND BOTTOM OF THE PLASTIC BODY.
5. DATUMS A AND B TO BE DETERMINED AT DATUM H.
6. "N" IS THE MAXIMUM NUMBER OF TERMINAL POSITIONS FOR THE SPECIFIED PACKAGE LENGTH.
7. THE DIMENSIONS APPLY TO THE FLAT SECTION OF THE LEAD BETWEEN 0.10 TO 0.25 mm FROM THE LEAD TIP.
8. DIMENSION "b" DOES NOT INCLUDE DAMBAR PROTRUSION. ALLOWABLE DAMBAR PROTRUSION SHALL BE 0.10 mm TOTAL IN EXCESS OF THE "b" DIMENSION AT MAXIMUM MATERIAL CONDITION. THE DAMBAR CANNOT BE LOCATED ON THE LOWER RADIUS OF THE LEAD FOOT.
9. THIS CHAMFER FEATURE IS OPTIONAL. IF IT IS NOT PRESENT, THEN A PIN 1 IDENTIFIER MUST BE LOCATED WITHIN THE INDEX AREA INDICATED.
10. LEAD COPLANARITY SHALL BE WITHIN 0.10 mm AS MEASURED FROM THE SEATING PLANE.

3602 \ 16-038.03 \ 9.1.6

Not recommended for new designs

11. Revision History

Spansion Publication Number: S25FL208K_00

Document History Page

Document Title: S25FL208K, 8-Mbit 3.0V Serial Flash Memory with Uniform 4 kB Sectors Document Number: 002-00721				
Rev.	**ECN No.**	**Orig. of Change**	**Submission Date**	**Description of Change**
**	–	–	October 31, 2011	Initial release
*A			December 21, 2011	DC Characteristics: Updated ICC2 values
*B	–	–	January 6, 2012	Distinctive Features: Updated Standby Current value
*C	–	–	May 24, 2012	Global: Data Sheet designation went from Advance Information to Preliminary Recommended Operating Ranges: Updated Supply Voltage Conditions DC Characteristics: Updated ICC1 and ICC2 Max values AC Characteristics: Updated table
*D	–	–	August 14, 2012	Status Register: Changed status register bit R0 from ‘BUSY’ to ‘WIP’ Global: Changed ‘BUSY’ to ‘WIP’ Ordering Information: Changed Speed from 0X to 0R AC Characteristics: Changed F_R Max values from 104 to 76 and from 85 to 76. Changed t_{CSS} Min value from 5 to 7. Changed t_V Max value from 8 to 10. Added Note 5 and Note 6
*E	–	–	January 17, 2013	Cover Sheet: Added Nantronics logo to cover sheet
*F	–	–	September 16, 2013	Global: Changed data sheet designation to “Full Production”
*G	4925992	BWHA	September 18, 2015	Updated to Cypress template
*H	5746090	AESATP12	May 30, 2017	Updated logo and copyright. Added watermark “Not recommended for new designs” across the document.

Not recommended for new designs

Sales, Solutions, and Legal Information

Worldwide Sales and Design Support

Cypress maintains a worldwide network of offices, solution centers, manufacturer's representatives, and distributors. To find the office closest to you, visit us at Cypress Locations.

Products

ARM® Cortex® Microcontrollers	cypress.com/arm
Automotive	cypress.com/automotive
Clocks & Buffers	cypress.com/clocks
Interface	cypress.com/interface
Internet of Things	cypress.com/iot
Memory	cypress.com/memory
Microcontrollers	cypress.com/mcu
PSoC	cypress.com/psoc
Power Management ICs	cypress.com/pmic
Touch Sensing	cypress.com/touch
USB Controllers	cypress.com/usb
Wireless Connectivity	cypress.com/wireless

PSoC® Solutions

PSoC 1 | PSoC 3 | PSoC 4 | PSoC 5LP| PSoC 6

Cypress Developer Community

Forums | WICED IOT Forums | Projects | Video | Blogs | Training | Components

Technical Support

cypress.com/support

Not recommended for new designs

© Cypress Semiconductor Corporation, 2011-2017. This document is the property of Cypress Semiconductor Corporation and its subsidiaries, including Spansion LLC ("Cypress"). This document, including any software or firmware included or referenced in this document ("Software"), is owned by Cypress under the intellectual property laws and treaties of the United States and other countries worldwide. Cypress reserves all rights under such laws and treaties and does not, except as specifically stated in this paragraph, grant any license under its patents, copyrights, trademarks, or other intellectual property rights. If the Software is not accompanied by a license agreement and you do not otherwise have a written agreement with Cypress governing the use of the Software, then Cypress hereby grants you a personal, non-exclusive, nontransferable license (without the right to sublicense) (1) under its copyright rights in the Software (a) for Software provided in source code form, to modify and reproduce the Software solely for use with Cypress hardware products, only internally within your organization, and (b) to distribute the Software in binary code form externally to end users (either directly or indirectly through resellers and distributors), solely for use on Cypress hardware product units, and (2) under those claims of Cypress's patents that are infringed by the Software (as provided by Cypress, unmodified) to make, use, distribute, and import the Software solely for use with Cypress hardware products. Any other use, reproduction, modification, translation, or compilation of the Software is prohibited.

TO THE EXTENT PERMITTED BY APPLICABLE LAW, CYPRESS MAKES NO WARRANTY OF ANY KIND, EXPRESS OR IMPLIED, WITH REGARD TO THIS DOCUMENT OR ANY SOFTWARE OR ACCOMPANYING HARDWARE, INCLUDING, BUT NOT LIMITED TO, THE IMPLIED WARRANTIES OF MERCHANTABILITY AND FITNESS FOR A PARTICULAR PURPOSE. To the extent permitted by applicable law, Cypress reserves the right to make changes to this document without further notice. Cypress does not assume any liability arising out of the application or use of any product or circuit described in this document. Any information provided in this document, including any sample design information or programming code, is provided only for reference purposes. It is the responsibility of the user of this document to properly design, program, and test the functionality and safety of any application made of this information and any resulting product. Cypress products are not designed, intended, or authorized for use as critical components in systems designed or intended for the operation of weapons, weapons systems, nuclear installations, life-support devices or systems, other medical devices or systems (including resuscitation equipment and surgical implants), pollution control or hazardous substances management, or other uses where the failure of the device or system could cause personal injury, death, or property damage ("Unintended Uses"). A critical component is any component of a device or system whose failure to perform can be reasonably expected to cause the failure of the device or system, or to affect its safety or effectiveness. Cypress is not liable, in whole or in part, and you shall and hereby do release Cypress from any claim, damage, or other liability arising from or related to all Unintended Uses of Cypress products. You shall indemnify and hold Cypress harmless from and against all claims, costs, damages, and other liabilities, including claims for personal injury or death, arising from or related to any Unintended Uses of Cypress products.

Cypress, the Cypress logo, Spansion, the Spansion logo, and combinations thereof, WICED, PSoC, CapSense, EZ-USB, F-RAM, and Traveo are trademarks or registered trademarks of Cypress in the United States and other countries. For a more complete list of Cypress trademarks, visit cypress.com. Other names and brands may be claimed as property of their respective owners.

Looking for pricing, stock, or lifecycle information?

Click below to explore more details on WIN SOURCE:

- View S25FL208K0RMFI013 on WIN SOURCE
- Cypress Semiconductor Corp Information

Optimize Your Supply Chain with WIN SOURCE Solutions

- Global Sourcing Solution
- Obsolete Management
- Cost Control Management
- Shortage Management
- Alternative Solution
- Excess Inventory Management