THE DATASHEET OF

AT24C512N-10SI-1.8

www.win-source.net 0086-755-83957316

2-wire Serial EEPROM

512K (65,536 x 8)

AT24C512

Features

- **Low-voltage and Standard-voltage Operation**
  - **2.7 (V_{CC} = 2.7V to 5.5V)**
  - **1.8 (V_{CC} = 1.8V to 3.6V)**
- **Internally Organized 65,536 x 8**
- **2-wire Serial Interface**
- **Schmitt Triggers, Filtered Inputs for Noise Suppression**
- **Bidirectional Data Transfer Protocol**
- **1 MHz (5V), 400 kHz (2.7V) and 100 kHz (1.8V) Compatibility**
- **Write Protect Pin for Hardware and Software Data Protection**
- **128-byte Page Write Mode (Partial Page Writes Allowed)**
- **Self-timed Write Cycle (5 ms Max)**
- **High Reliability**
  - **Endurance: 100,000 Write Cycles**
  - **Data Retention: 40 Years**
- **Automotive Grade, Extended Temperature and Lead-free/Halogen-free Devices Available**
- **8-lead PDIP, 8-lead EIAJ SOIC, 8-lead JEDEC SOIC, 8-lead TSSOP, 8-lead LAP and 8-ball dBGA™ Packages**

Description

The AT24C512 provides 524,288 bits of serial electrically erasable and programmable read only memory (EEPROM) organized as 65,536 words of 8 bits each. The device's cascadable feature allows up to 4 devices to share a common 2-wire bus. The device is optimized for use in many industrial and commercial applications where low-power and low-voltage operation are essential. The devices are available in space-saving 8-pin PDIP, 8-lead EIAJ SOIC, 8-lead JEDEC SOIC, 8-lead TSSOP, 8-lead Leadless Array (LAP) and 8-ball dBGA packages. In addition, the entire family is available in 2.7V (2.7V to 5.5V) and 1.8V (1.8V to 3.6V) versions.

Pin Configurations

Pin Name	Function
A0 - A1	Address Inputs
SDA	Serial Data
SCL	Serial Clock Input
WP	Write Protect
NC	No Connect

8-lead TSSOP

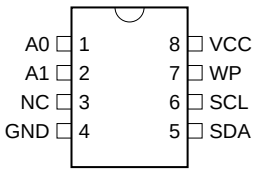

8-lead SOIC

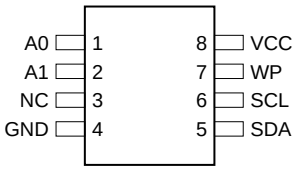

8-lead PDIP

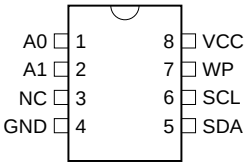

8-lead Leadless Array

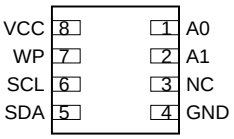

Bottom View

8-ball dBGA

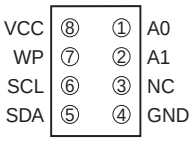

Bottom View

Rev. 1116K–SEEPR–1/04

Absolute Maximum Ratings*

Operating Temperature	-55° C to +125° C
Storage Temperature	-65° C to +150° C
Voltage on Any Pin with Respect to Ground	-1.0V to +7.0V
Maximum Operating Voltage	6.25V
DC Output Current	5.0 mA

*NOTICE: Stresses beyond those listed under “Absolute Maximum Ratings” may cause permanent damage to the device. This is a stress rating only and functional operation of the device at these or any other conditions beyond those indicated in the operational sections of this specification is not implied. Exposure to absolute maximum rating conditions for extended periods may affect device reliability.

Block Diagram

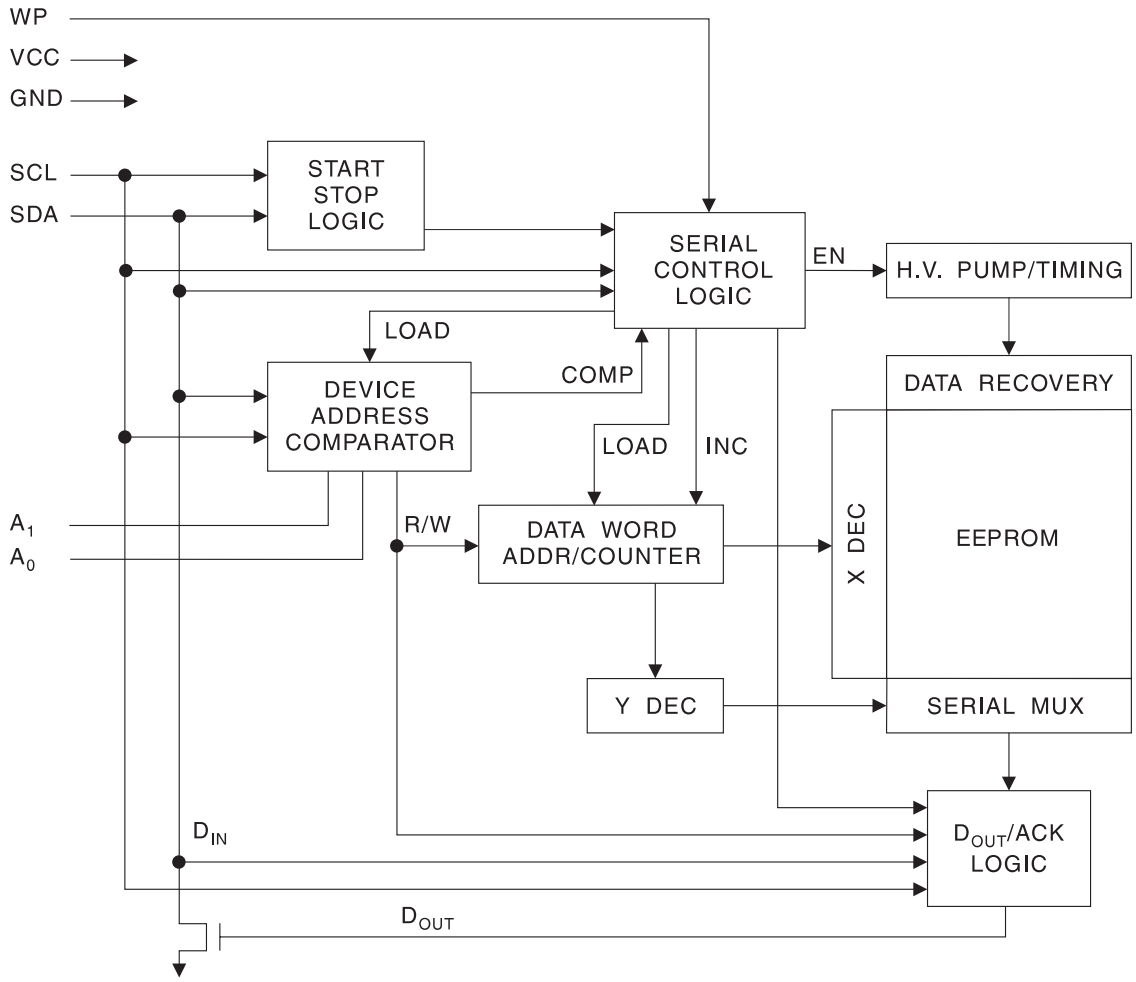

Pin Description

SERIAL CLOCK (SCL): The SCL input is used to positive edge clock data into each EEPROM device and negative edge clock data out of each device.

SERIAL DATA (SDA): The SDA pin is bidirectional for serial data transfer. This pin is open-drain driven and may be wire-ORed with any number of other open-drain or open collector devices.

DEVICE/ADDRESSES (A1, A0): The A1 and A0 pins are device address inputs that are hardwired or left not connected for hardware compatibility with other AT24Cxx devices. When the pins are hardwired, as many as four 512K devices may be addressed on a single bus system (device addressing is discussed in detail under the Device Addressing section). If the pins are left floating, the A1 and A0 pins will be internally pulled down to GND if the capacitive coupling to the circuit board V_{CC} plane is <3 pF. If coupling is >3 pF, Atmel recommends connecting the address pins to GND.

WRITE PROTECT (WP): The write protect input, when connected to GND, allows normal write operations. When WP is connected high to V_{CC}, all write operations to the memory are inhibited. If the pin is left floating, the WP pin will be internally pulled down to GND if the capacitive coupling to the circuit board V_{CC} plane is <3 pF. If coupling is >3 pF, Atmel recommends connecting the pin to GND. Switching WP to V_{CC} prior to a write operation creates a software write protect function.

Memory Organization

AT24C512, 512K SERIAL EEPROM: The 512K is internally organized as 512 pages of 128-bytes each. Random word addressing requires a 16-bit data word address.

Pin Capacitance[1]

Applicable over recommended operating range from T_A = 25° C, f = 1.0 MHz, V_{CC} = +1.8V.

Symbol	Test Condition	Max	Units	Conditions
$C_{I/O}$	Input/Output Capacitance (SDA)	8	pF	$V_{I/O}$ = 0V
C_{IN}	Input Capacitance (A_0, A_1, SCL)	6	pF	V_{IN} = 0V

Note: 1. This parameter is characterized and is not 100% tested.

DC Characteristics

Applicable over recommended operating range from: T_{AI} = -40° C to +85° C, V_{CC} = +1.8V to +5.5V, T_{AC} = 0° C to +70° C, V_{CC} = +1.8V to +5.5V (unless otherwise noted).

Symbol	Parameter	Test Condition		Min	Typ	Max	Units
V_{CC1}	Supply Voltage			1.8		3.6	V
V_{CC2}	Supply Voltage			2.7		5.5	V
V_{CC3}	Supply Voltage			4.5		5.5	V
I_{CC1}	Supply Current	V_{CC} = 5.0V	READ at 400 kHz		1.0	2.0	mA
I_{CC2}	Supply Current	V_{CC} = 5.0V	WRITE at 400 kHz		2.0	3.0	mA
I_{SB1}	Standby Current (1.8V option)	V_{CC} = 1.8V	V_{IN} = V_{CC} or V_{SS}			1.0	µA
		V_{CC} = 3.6V				3.0	
I_{SB2}	Standby Current (2.7V option)	V_{CC} = 2.7V	V_{IN} = V_{CC} or V_{SS}			2.0	µA
		V_{CC} = 5.5V				6.0	
I_{SB3}	Standby Current (5.0V option)	V_{CC} = 4.5 - 5.5V	V_{IN} = V_{CC} or V_{SS}			6.0	µA
I_{LI}	Input Leakage Current	V_{IN} = V_{CC} or V_{SS}			0.10	3.0	µA
I_{LO}	Output Leakage Current	V_{OUT} = V_{CC} or V_{SS}			0.05	3.0	µA
V_{IL}	Input Low Level[1]			-0.6		V_{CC} x 0.3	V
V_{IH}	Input High Level[1]			V_{CC} x 0.7		V_{CC} + 0.5	V
V_{OL2}	Output Low Level	V_{CC} = 3.0V	I_{OL} = 2.1 mA			0.4	V
V_{OL1}	Output Low Level	V_{CC} = 1.8V	I_{OL} = 0.15 mA			0.2	V

Note: 1. V_{IL} min and V_{IH} max are reference only and are not tested.

AC Characteristics

Applicable over recommended operating range from T_A = -40° C to +85° C, V_{CC} = +1.8V to +5.5V, C_L = 100 pF (unless otherwise noted). Test conditions are listed in Note 2.

Symbol	Parameter	1.8-volt		2.7-volt		5.0-volt		Units
		Min	Max	Min	Max	Min	Max	
f_{SCL}	Clock Frequency, SCL		100		400		1000	kHz
t_{LOW}	Clock Pulse Width Low	4.7		1.3		0.4		µs
t_{HIGH}	Clock Pulse Width High	4.0		1.0		0.4		µs
t_{AA}	Clock Low to Data Out Valid	0.1	4.5	0.05	0.9	0.05	0.55	µs
t_{BUF}	Time the bus must be free before a new transmission can start(1)	4.7		1.3		0.5		µs
$t_{HD.STA}$	Start Hold Time	4.0		0.6		0.25		µs
$t_{SU.STA}$	Start Set-up Time	4.7		0.6		0.25		µs
$t_{HD.DAT}$	Data In Hold Time	0		0		0		µs
$t_{SU.DAT}$	Data In Set-up Time	200		100		100		ns
t_R	Inputs Rise Time(1)		1.0		0.3		0.3	µs
t_F	Inputs Fall Time(1)		300		300		100	ns
$t_{SU.STO}$	Stop Set-up Time	4.7		0.6		0.25		µs
t_{DH}	Data Out Hold Time	100		50		50		ns
t_{WR}	Write Cycle Time		20 or 5(3)		10 or 5(3)		10 or 5(3)	ms
Endurance(1)	5.0V, 25° C, Page Mode	100K		100K		100K		Write Cycles

Notes:
1. This parameter is characterized and is not 100% tested.
2. AC measurement conditions:
   R_L (connects to V_{CC}): 1.3 kΩ (2.7V, 5V), 10 kΩ (1.8V)
   Input pulse voltages: $0.3V_{CC}$ to $0.7V_{CC}$
   Input rise and fall times: ≤50 ns
   Input and output timing reference voltages: $0.5V_{CC}$
3. The Write Cycle Time of 5 ms only applies to the AT24C512 devices bearing the process letter “A” on the package (the mark is located in the lower right corner on the top side of the package).

Device Operation

CLOCK and DATA TRANSITIONS: The SDA pin is normally pulled high with an external device. Data on the SDA pin may change only during SCL low time periods (refer to Data Validity timing diagram). Data changes during SCL high periods will indicate a start or stop condition as defined below.

START CONDITION: A high-to-low transition of SDA with SCL high is a start condition which must precede any other command (refer to Start and Stop Definition timing diagram).

STOP CONDITION: A low-to-high transition of SDA with SCL high is a stop condition. After a read sequence, the stop command will place the EEPROM in a standby power mode (refer to Start and Stop Definition timing diagram).

ACKNOWLEDGE: All addresses and data words are serially transmitted to and from the EEPROM in 8-bit words. The EEPROM sends a zero during the ninth clock cycle to acknowledge that it has received each word.

STANDBY MODE: The AT24C512 features a low power standby mode which is enabled: a) upon power-up and b) after the receipt of the STOP bit and the completion of any internal operations.

MEMORY RESET: After an interruption in protocol, power loss or system reset, any 2-wire part can be reset by following these steps:

(a) Clock up to 9 cycles, (b) look for SDA high in each cycle while SCL is high and then (c) create a start condition as SDA is high.

Bus Timing (SCL: Serial Clock, SDA: Serial Data I/O)

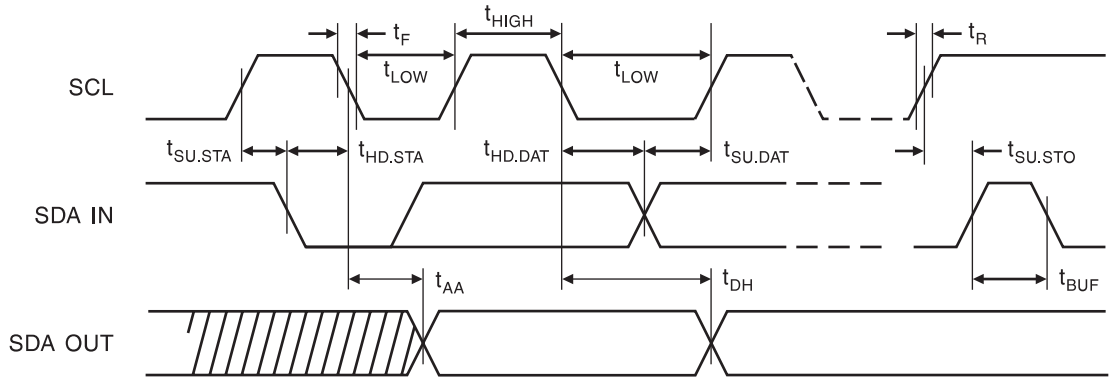

Write Cycle Timing (SCL: Serial Clock, SDA: Serial Data I/O)

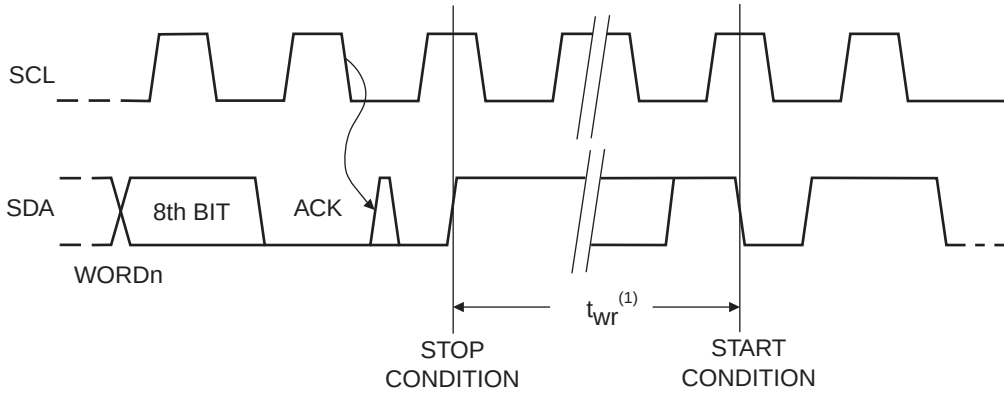

Note: 1. The write cycle time t_{WR} is the time from a valid stop condition of a write sequence to the end of the internal clear/write cycle.

Data Validity

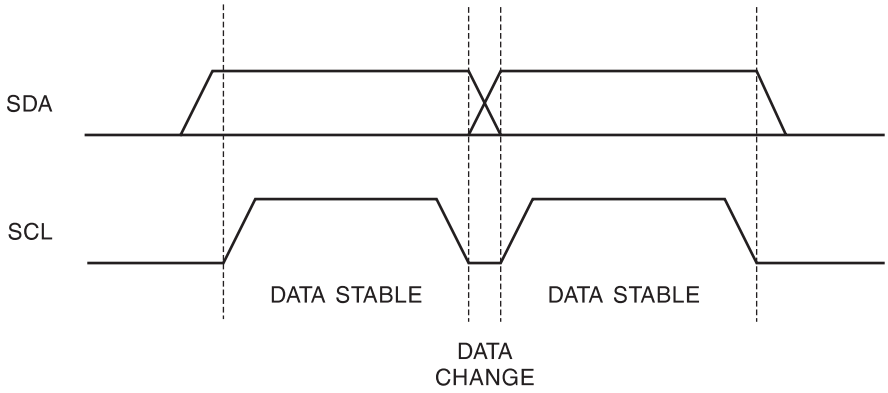

Start and Stop Definition

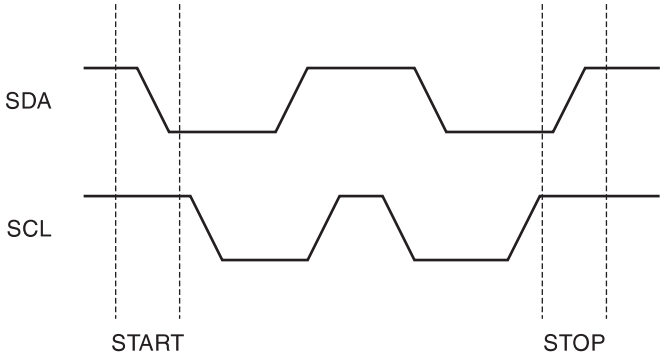

Output Acknowledge

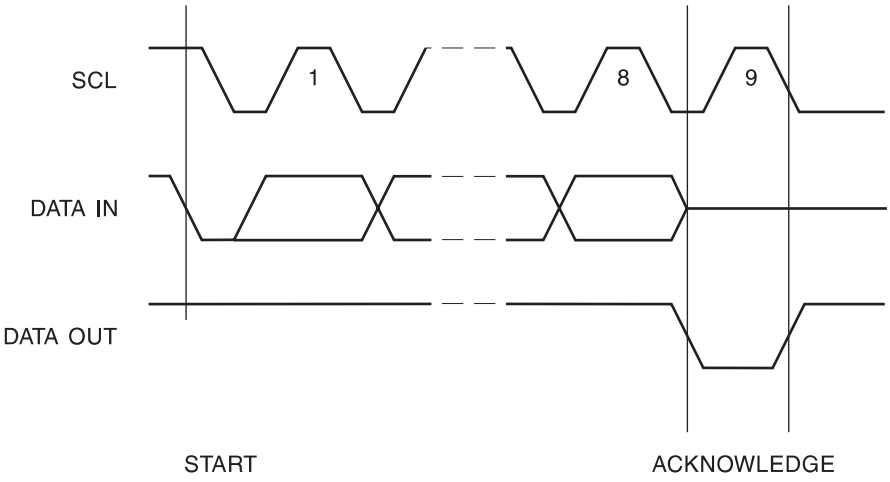

Device Addressing

The 512K EEPROM requires an 8-bit device address word following a start condition to enable the chip for a read or write operation (refer to Figure 1). The device address word consists of a mandatory one, zero sequence for the first five most significant bits as shown. This is common to all 2-wire EEPROM devices.

The 512K uses the two device address bits A1, A0 to allow as many as four devices on the same bus. These bits must compare to their corresponding hardwired input pins. The A1 and A0 pins use an internal proprietary circuit that biases them to a logic low condition if the pins are allowed to float.

The eighth bit of the device address is the read/write operation select bit. A read operation is initiated if this bit is high and a write operation is initiated if this bit is low.

Upon a compare of the device address, the EEPROM will output a zero. If a compare is not made, the device will return to a standby state.

DATA SECURITY: The AT24C512 has a hardware data protection scheme that allows the user to write protect the whole memory when the WP pin is at V_{CC}.

Write Operations

BYTE WRITE: A write operation requires two 8-bit data word addresses following the device address word and acknowledgment. Upon receipt of this address, the EEPROM will again respond with a zero and then clock in the first 8-bit data word. Following receipt of the 8-bit data word, the EEPROM will output a zero. The addressing device, such as a microcontroller, then must terminate the write sequence with a stop condition. At this time the EEPROM enters an internally-timed write cycle, t_{WR}, to the nonvolatile memory. All inputs are disabled during this write cycle and the EEPROM will not respond until the write is complete (refer to Figure 2).

PAGE WRITE: The 512K EEPROM is capable of 128-byte page writes.

A page write is initiated the same way as a byte write, but the microcontroller does not send a stop condition after the first data word is clocked in. Instead, after the EEPROM acknowledges receipt of the first data word, the microcontroller can transmit up to 127 more data words. The EEPROM will respond with a zero after each data word received. The microcontroller must terminate the page write sequence with a stop condition (refer to Figure 3).

The data word address lower 7 bits are internally incremented following the receipt of each data word. The higher data word address bits are not incremented, retaining the memory page row location. When the word address, internally generated, reaches the page boundary, the following byte is placed at the beginning of the same page. If more than 128 data words are transmitted to the EEPROM, the data word address will “roll over” and previous data will be overwritten. The address “roll over” during write is from the last byte of the current page to the first byte of the same page.

ACKNOWLEDGE POLLING: Once the internally-timed write cycle has started and the EEPROM inputs are disabled, acknowledge polling can be initiated. This involves sending a start condition followed by the device address word. The read/write bit is representative of the operation desired. Only if the internal write cycle has completed will the EEPROM respond with a zero, allowing the read or write sequence to continue.

Read Operations

Read operations are initiated the same way as write operations with the exception that the read/write select bit in the device address word is set to one. There are three read operations: current address read, random address read and sequential read.

CURRENT ADDRESS READ: The internal data word address counter maintains the last address accessed during the last read or write operation, incremented by one. This address stays valid between operations as long as the chip power is maintained. The address "roll over" during read is from the last byte of the last memory page, to the first byte of the first page.

Once the device address with the read/write select bit set to one is clocked in and acknowledged by the EEPROM, the current address data word is serially clocked out. The microcontroller does not respond with an input zero but does generate a following stop condition (refer to Figure 4).

RANDOM READ: A random read requires a "dummy" byte write sequence to load in the data word address. Once the device address word and data word address are clocked in and acknowledged by the EEPROM, the microcontroller must generate another start condition. The microcontroller now initiates a current address read by sending a device address with the read/write select bit high. The EEPROM acknowledges the device address and serially clocks out the data word. The microcontroller does not respond with a zero but does generate a following stop condition (refer to Figure 5).

SEQUENTIAL READ: Sequential reads are initiated by either a current address read or a random address read. After the microcontroller receives a data word, it responds with an acknowledge. As long as the EEPROM receives an acknowledge, it will continue to increment the data word address and serially clock out sequential data words. When the memory address limit is reached, the data word address will "roll over" and the sequential read will continue. The sequential read operation is terminated when the microcontroller does not respond with a zero but does generate a following stop condition (refer to Figure 6).

Figure 1. Device Address

1	0	1	0	0	A_1	A_0	R/W

MSB LSB

Figure 2. Byte Write

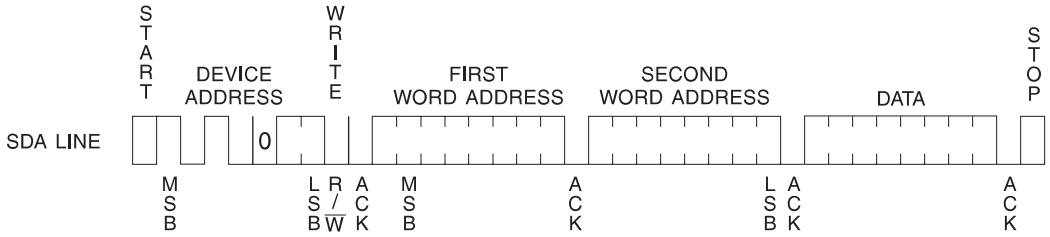

Figure 3. Page Write

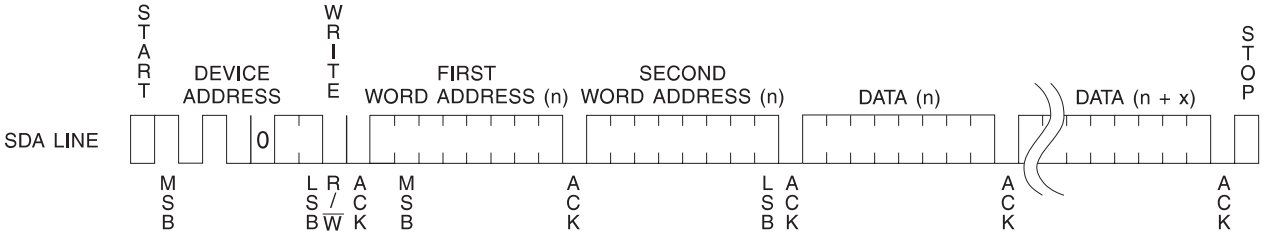

Figure 4. Current Address Read

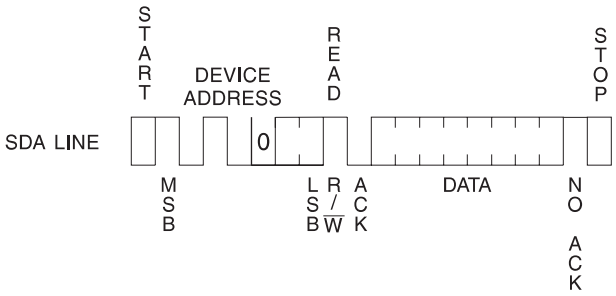

Figure 5. Random Read

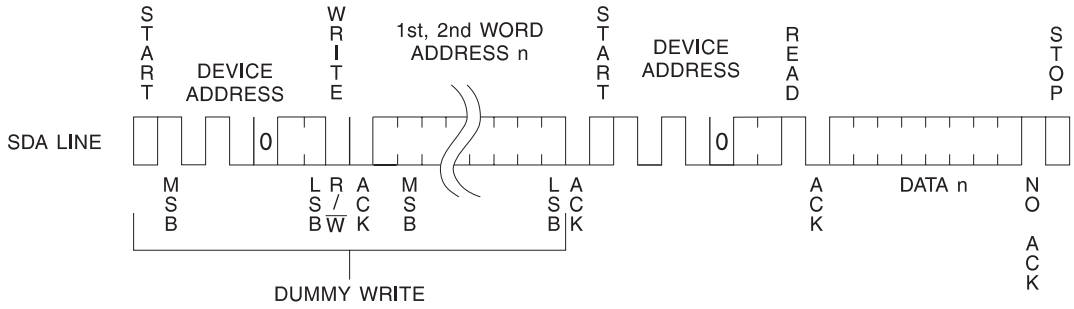

Figure 6. Sequential Read

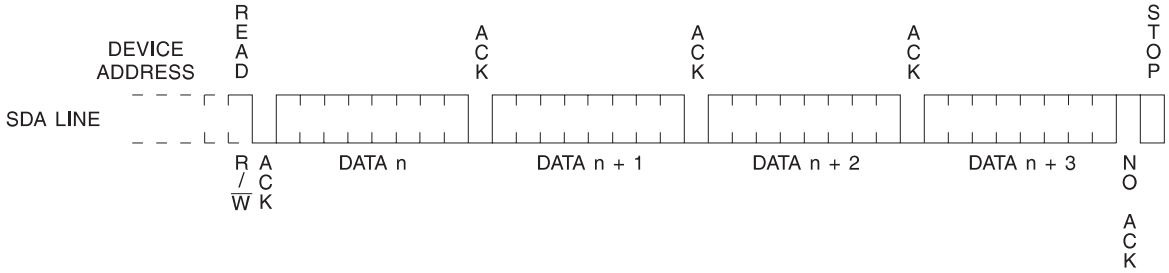

Ordering Information

Ordering Code	Package	Operation Range
AT24C512C1-10CI-2.7	8CN1	Industrial Temperature (-40° C to 85° C)
AT24C512-10PI-2.7	8P3	
AT24C512W-10SI-2.7	8S2	
AT24C512N-10SI-2.7	8S1	
AT24C512-10TI-2.7	8A2	
AT24C512-10UI-2.7	8U2	
AT24C512C1-10CI-1.8	8CN1	Industrial Temperature (-40° C to 85° C)
AT24C512-10PI-1.8	8P3	
AT24C512W-10SI-1.8	8S2	
AT24C512N-10SI-1.8	8S1	
AT24C512-10TI-1.8	8A2	
AT24C512-10UI-1.8	8U2	
AT24C512N-10SU-2.7	8S1	Lead-free/Halogen-free/ Industrial Temperature (-40° C to 85° C)
AT24C512N-10SU-1.8	8S1	
AT24C512-10TU-2.7	8A2	
AT24C512-10TU-1.8	8A2	

Note: For 2.7V devices used in the 4.5V to 5.5V range, please refer to performance values in the AC and DC characteristics tables.

Package Type	
8CN1	8-lead, 0.300" Wide, Leadless Array Package (LAP)
8P3	8-lead, 0.300" Wide, Plastic Dual In-line Package (PDIP)
8S2	8-lead, 0.200” Wide, Plastic Gull Wing Small Outline Package (EIAJ SOIC)
8S1	8-lead, 0.150” Wide, Plastic Gull Wing Small Outline Package (JEDEC SOIC)
8A2	8-lead, 4.4 mm Body, Plastic Thin Shrink Small Outline Package (TSSOP)
8U2	8-ball, die Ball Grid Array Package (dBGA)
Options	
-2.7	Low-voltage (2.7V to 5.5V)
-1.8	Low-voltage (1.8V to 3.6V)

Packaging Information

8CN1 – LAP

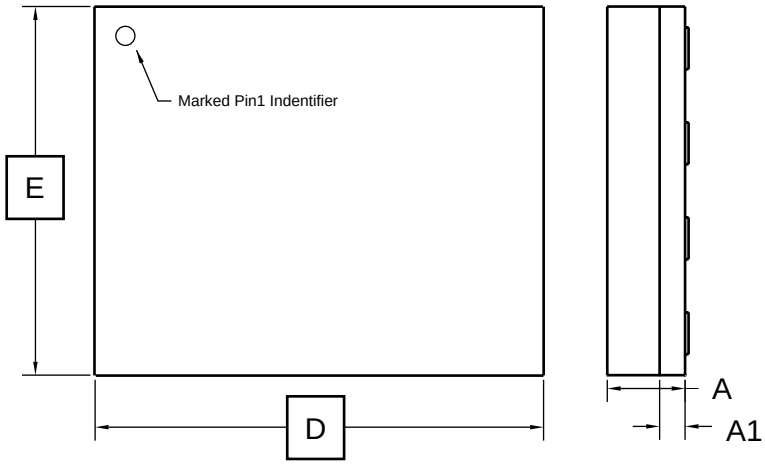

Top View

Side View

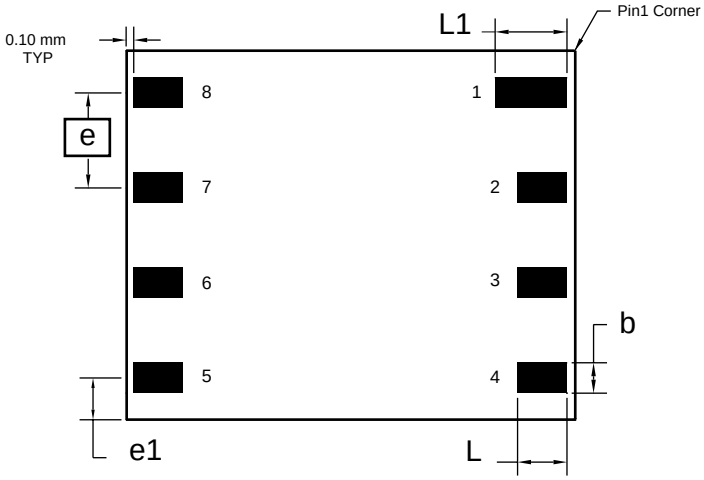

Bottom View

COMMON DIMENSIONS
(Unit of Measure = mm)

SYMBOL	MIN	NOM	MAX	NOTE
A	0.94	1.04	1.14	
A1	0.30	0.34	0.38	
b	0.36	0.41	0.46	1
D	7.90	8.00	8.10	
E	4.90	5.00	5.10	
e	1.27 BSC			
e1	0.60 REF			
L	0.62	0.67	0.72	1
L1	0.92	0.97	1.02	1

Note: 1. Metal Pad Dimensions.

11/13/01

2325 Orchard Parkway San Jose, CA 95131	**TITLE** **8CN1**, 8-lead (8 x 5 x 1.04 mm Body), Lead Pitch 1.27 mm, Leadless Array Package (LAP)	**DRAWING NO.** 8CN1	**REV.** A

8P3 – PDIP

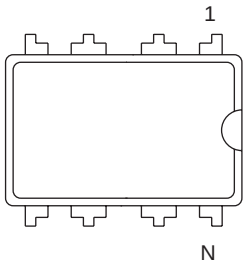

Top View

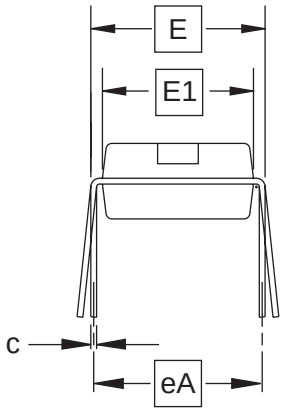

End View

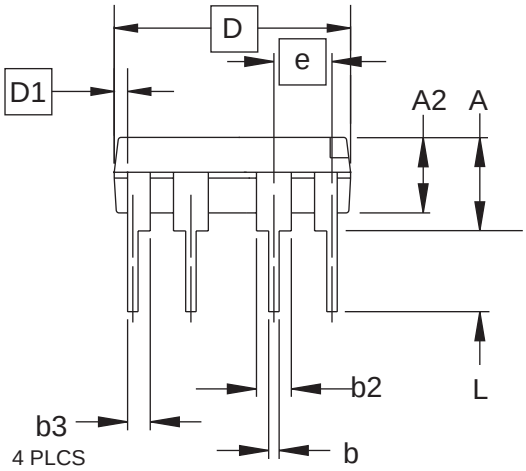

Side View

COMMON DIMENSIONS
(Unit of Measure = inches)

SYMBOL	MIN	NOM	MAX	NOTE
A			0.210	2
A2	0.115	0.130	0.195	
b	0.014	0.018	0.022	5
b2	0.045	0.060	0.070	6
b3	0.030	0.039	0.045	6
c	0.008	0.010	0.014	
D	0.355	0.365	0.400	3
D1	0.005			3
E	0.300	0.310	0.325	4
E1	0.240	0.250	0.280	3
e	0.100 BSC			
eA	0.300 BSC			4
L	0.115	0.130	0.150	2

Notes:
1. This drawing is for general information only; refer to JEDEC Drawing MS-001, Variation BA for additional information.
2. Dimensions A and L are measured with the package seated in JEDEC seating plane Gauge GS-3.
3. D, D1 and E1 dimensions do not include mold Flash or protrusions. Mold Flash or protrusions shall not exceed 0.010 inch.
4. E and eA measured with the leads constrained to be perpendicular to datum.
5. Pointed or rounded lead tips are preferred to ease insertion.
6. b2 and b3 maximum dimensions do not include Dambar protrusions. Dambar protrusions shall not exceed 0.010 (0.25 mm).

01/09/02

	TITLE	DRAWING NO.	REV.
2325 Orchard Parkway San Jose, CA 95131	**8P3**, 8-lead, 0.300" Wide Body, Plastic Dual In-line Package (PDIP)	8P3	B

8S2 – EIAJ SOIC

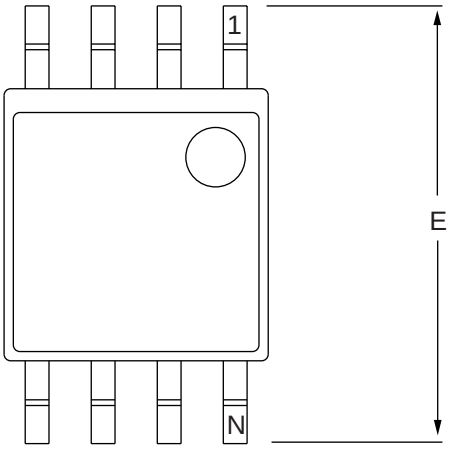

Top View

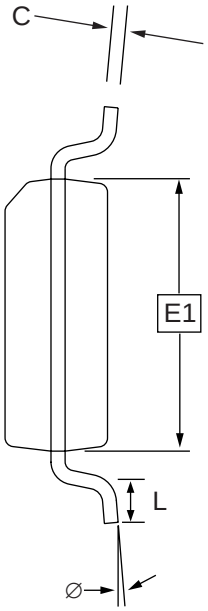

End View

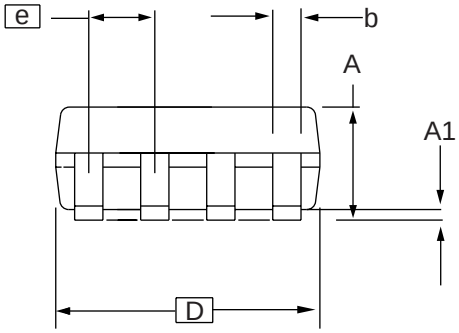

Side View

COMMON DIMENSIONS
(Unit of Measure = mm)

SYMBOL	MIN	NOM	MAX	NOTE
A	1.70		2.16	
A1	0.05		0.25	
b	0.35		0.48	5
C	0.15		0.35	5
D	5.13		5.35	
E1	5.18		5.40	2, 3
E	7.70		8.26	
L	0.51		0.85	
∅	0°		8°	
e	1.27 BSC			4

Notes:
1. This drawing is for general information only; refer to EIAJ Drawing EDR-7320 for additional information.
2. Mismatch of the upper and lower dies and resin burrs are not included.
3. It is recommended that upper and lower cavities be equal. If they are different, the larger dimension shall be regarded.
4. Determines the true geometric position.
5. Values b and C apply to pb/Sn solder plated terminal. The standard thickness of the solder layer shall be 0.010 +0.010/–0.005 mm.

10/7/03

ATMEL 2325 Orchard Parkway San Jose, CA 95131	**TITLE** **8S2**, 8-lead, 0.209" Body, Plastic Small Outline Package (EIAJ)	**DRAWING NO.** 8S2	**REV.** C

8S1 – JEDEC SOIC

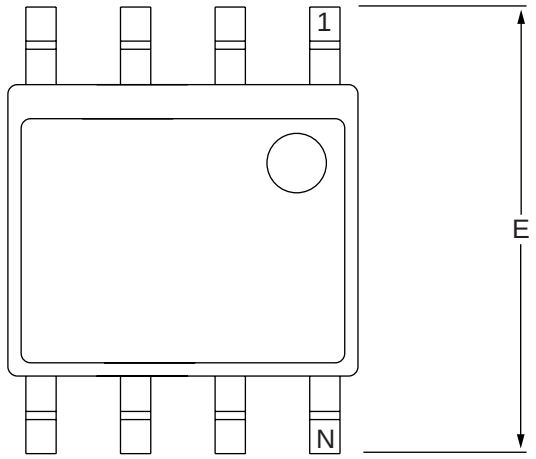

Top View

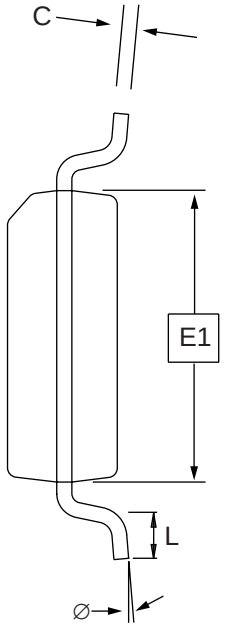

End View

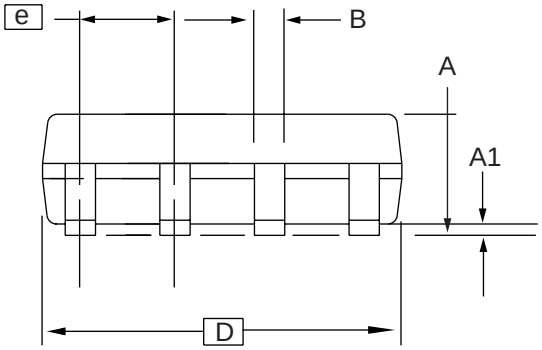

Side View

COMMON DIMENSIONS
(Unit of Measure = mm)

SYMBOL	MIN	NOM	MAX	NOTE
A	1.35	–	1.75	
A1	0.10	–	0.25	
b	0.31	–	0.51	
C	0.17	–	0.25	
D	4.80	–	5.00	
E1	3.81	–	3.99	
E	5.79	–	6.20	
e	1.27 BSC			
L	0.40	–	1.27	
∅	0°	–	8°	

Note: These drawings are for general information only. Refer to JEDEC Drawing MS-012, Variation AA for proper dimensions, tolerances, datums, etc.

10/7/03

1150 E. Cheyenne Mtn. Blvd. Colorado Springs, CO 80906	**TITLE** **8S1**, 8-lead (0.150" Wide Body), Plastic Gull Wing Small Outline (JEDEC SOIC)	**DRAWING NO.** 8S1	**REV.** B

8A2 – TSSOP

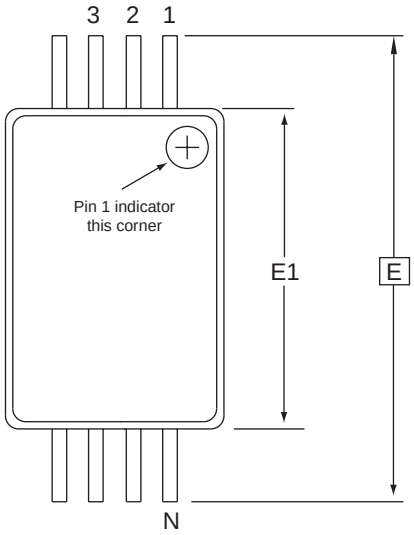

Top View

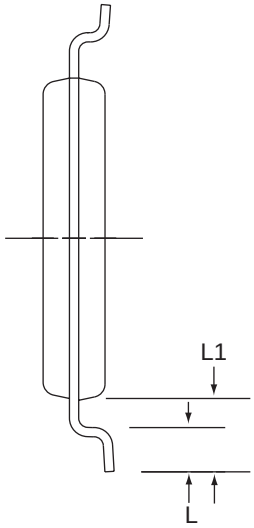

End View

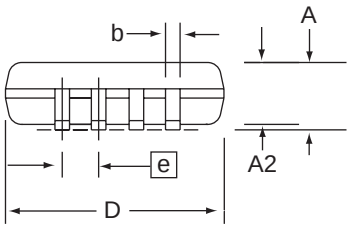

Side View

COMMON DIMENSIONS
(Unit of Measure = mm)

SYMBOL	MIN	NOM	MAX	NOTE
D	2.90	3.00	3.10	2, 5
E		6.40 BSC		
E1	4.30	4.40	4.50	3, 5
A	–	–	1.20	
A2	0.80	1.00	1.05	
b	0.19	–	0.30	4
e		0.65 BSC		
L	0.45	0.60	0.75	
L1		1.00 REF		

Notes:
1. This drawing is for general information only. Refer to JEDEC Drawing MO-153, Variation AA, for proper dimensions, tolerances, datums, etc.
2. Dimension D does not include mold Flash, protrusions or gate burrs. Mold Flash, protrusions and gate burrs shall not exceed 0.15 mm (0.006 in) per side.
3. Dimension E1 does not include inter-lead Flash or protrusions. Inter-lead Flash and protrusions shall not exceed 0.25 mm (0.010 in) per side.
4. Dimension b does not include Dambar protrusion. Allowable Dambar protrusion shall be 0.08 mm total in excess of the b dimension at maximum material condition. Dambar cannot be located on the lower radius of the foot. Minimum space between protrusion and adjacent lead is 0.07 mm.
5. Dimension D and E1 to be determined at Datum Plane H.

5/30/02

ATMEL 2325 Orchard Parkway San Jose, CA 95131	**TITLE** **8A2**, 8-lead, 4.4 mm Body, Plastic Thin Shrink Small Outline Package (TSSOP)	**DRAWING NO.** 8A2	**REV.** B

8U2 – dBGA

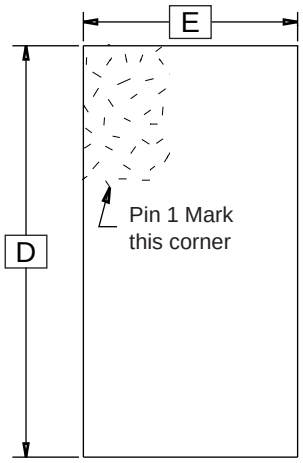

Top View

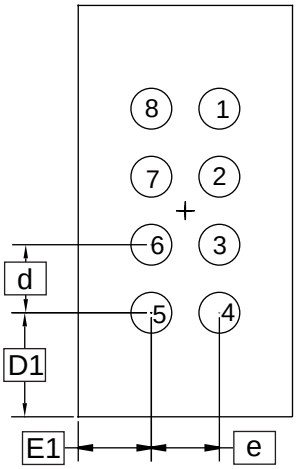

Bottom View

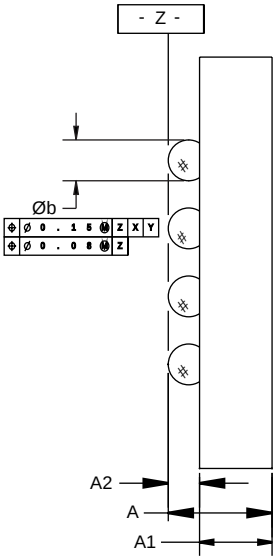

Side View

COMMON DIMENSIONS
(Unit of Measure = mm)

SYMBOL	MIN	NOM	MAX	NOTE
D			5.10	
D1		1.43 TYP		
E			3.25	
E1		1.25 TYP		
e		0.75 TYP		
d		0.75 TYP		
A		0.90 REF		
A1	0.49	0.52	0.55	
A2	0.35	0.38	0.41	
øb	0.47	0.50	0.53	

Notes: 1. These drawings are for general information only. No JEDEC Drawing to refer to for additional information.
2. Dimension is measured at the maximum solder ball diameter, parallel to primary datum Z.

02/04/02

1150 E. Cheyenne Mtn. Blvd. Colorado Springs, CO 80906	**TITLE** **8U2**, 8-ball 0.75 pitch, Die Ball Grid Array Package (dBGA) AT24C512 (AT19870)	**DRAWING NO.** 8U2	**REV.** A

Atmel Corporation

2325 Orchard Parkway
San Jose, CA 95131, USA
Tel: 1(408) 441-0311
Fax: 1(408) 487-2600

Regional Headquarters

Europe
Atmel Sarl
Route des Arsenaux 41
Case Postale 80
CH-1705 Fribourg
Switzerland
Tel: (41) 26-426-5555
Fax: (41) 26-426-5500

Asia
Room 1219
Chinachem Golden Plaza
77 Mody Road Tsimshatsui
East Kowloon
Hong Kong
Tel: (852) 2721-9778
Fax: (852) 2722-1369

Japan
9F, Tonetsu Shinkawa Bldg.
1-24-8 Shinkawa
Chuo-ku, Tokyo 104-0033
Japan
Tel: (81) 3-3523-3551
Fax: (81) 3-3523-7581

Atmel Operations

Memory
2325 Orchard Parkway
San Jose, CA 95131, USA
Tel: 1(408) 441-0311
Fax: 1(408) 436-4314

Microcontrollers
2325 Orchard Parkway
San Jose, CA 95131, USA
Tel: 1(408) 441-0311
Fax: 1(408) 436-4314

La Chantrerie
BP 70602
44306 Nantes Cedex 3, France
Tel: (33) 2-40-18-18-18
Fax: (33) 2-40-18-19-60

ASIC/ASSP/Smart Cards
Zone Industrielle
13106 Rousset Cedex, France
Tel: (33) 4-42-53-60-00
Fax: (33) 4-42-53-60-01

1150 East Cheyenne Mtn. Blvd.
Colorado Springs, CO 80906, USA
Tel: 1(719) 576-3300
Fax: 1(719) 540-1759

Scottish Enterprise Technology Park
Maxwell Building
East Kilbride G75 0QR, Scotland
Tel: (44) 1355-803-000
Fax: (44) 1355-242-743

RF/Automotive
Theresienstrasse 2
Postfach 3535
74025 Heilbronn, Germany
Tel: (49) 71-31-67-0
Fax: (49) 71-31-67-2340

1150 East Cheyenne Mtn. Blvd.
Colorado Springs, CO 80906, USA
Tel: 1(719) 576-3300
Fax: 1(719) 540-1759

Biometrics/Imaging/Hi-Rel MPU/
High Speed Converters/RF Datacom
Avenue de Rochepleine
BP 123
38521 Saint-Egreve Cedex, France
Tel: (33) 4-76-58-30-00
Fax: (33) 4-76-58-34-80

Literature Requests
www.atmel.com/literature

Disclaimer: Atmel Corporation makes no warranty for the use of its products, other than those expressly contained in the Company's standard warranty which is detailed in Atmel's Terms and Conditions located on the Company's web site. The Company assumes no responsibility for any errors which may appear in this document, reserves the right to change devices or specifications detailed herein at any time without notice, and does not make any commitment to update the information contained herein. No licenses to patents or other intellectual property of Atmel are granted by the Company in connection with the sale of Atmel products, expressly or by implication. Atmel's products are not authorized for use as critical components in life support devices or systems.

© Atmel Corporation 2004. **All rights reserved.** Atmel® and combinations thereof, are the registered trademarks, and dBGA™ is the trademark of Atmel Corporation or its subsidiaries. Other terms and product names may be the trademarks of others.

Printed on recycled paper.

1116K–SEEPR–1/04 xM

Looking for pricing, stock, or lifecycle information?

Click below to explore more details on WIN SOURCE:

- View AT24C512N-10SI-1.8 on WIN SOURCE
- Atmel Information

Optimize Your Supply Chain with WIN SOURCE Solutions

- Global Sourcing Solution
- Obsolete Management
- Cost Control Management
- Shortage Management
- Alternative Solution
- Excess Inventory Management