THE DATASHEET OF

MAX19708ETM+

www.win-source.net 0086-755-83957316

19-3764; Rev 0; 8/05

EVALUATION KIT AVAILABLE

10-Bit, 11Msps, Ultra-Low-Power Analog Front-End

MAX19708

General Description

The MAX19708 is an ultra-low-power, mixed-signal analog front-end (AFE) designed for TD-SCDMA handsets and data cards. Optimized for high dynamic performance at ultra-low power, the device integrates a dual 10-bit, 11Msps receive (Rx) ADC; dual 10-bit, 11Msps transmit (Tx) DAC with TD-SCDMA baseband filters; three fast-settling 12-bit aux-DAC channels for ancillary RF front-end control; and a 10-bit, 333ksps housekeeping aux-ADC. The typical operating power in Tx-Rx FAST mode is 36.9mW at a 5.12MHz clock frequency.

The Rx ADCs feature 55dB SNR and 77.4dBc SFDR at a 1.87MHz input frequency with an 11MHz clock frequency. The analog I/Q input amplifiers are fully differential and accept 1.024V_{P-P} full-scale signals. Typical I/Q channel matching is ±0.08° phase and ±0.02dB gain.

The Tx DACs with TD-SCDMA lowpass filters feature -3dB cutoff frequency of 1.32MHz and > 55dB stopband rejection at f_{IMAGE} = 4.32MHz. The analog I-Q full-scale output voltage range is selectable at ±410mV or ±500mV differential. The output DC common-mode voltage is selectable from 0.9V to 1.4V. The I/Q channel offset is adjustable to optimize radio lineup sideband/carrier suppression. Typical I-Q channel matching is ±0.02dB gain and ±0.04° phase.

The Rx ADC and Tx DAC share a single, 10-bit parallel, high-speed digital bus allowing half-duplex operation for time-division duplex (TDD) applications. A 3-wire serial interface controls power-management modes, the aux-DAC channels, and the aux-ADC channels.

The MAX19708 operates on a single +2.7V to +3.3V analog supply and +1.8V to +3.3V digital I/O supply. The MAX19708 is specified for the extended (-40°C to +85°C) temperature range and is available in a 48-pin, thin QFN package. The *Selector Guide* at the end of the data sheet lists other pin-compatible versions in this AFE family.

Applications

TD-SCDMA Handsets

TD-SCDMA Data Cards

Portable Communication Equipment

Ordering Information

PART*	PIN-PACKAGE	PKG CODE
MAX19708ETM	48 Thin QFN-EP**	T4877-4
MAX19708ETM+	48 Thin QFN-EP**	T4877-4

*All devices are specified over the -40°C to +85°C operating range.
**EP = Exposed paddle.
+Denotes lead-free package.

Features

- **Dual 10-Bit, 11Msps Rx ADC and Dual 10-Bit, 11Msps Tx DAC**
- **Ultra-Low Power**
  36.9mW at f_{CLK} = 5.12MHz, Fast Mode
  19.8mW at f_{CLK} = 5.12MHz, Slow Mode
  Low-Current Standby and Shutdown Modes
- **Integrated TD-SCDMA Filters with > 55dB Stopband Rejection**
- **Programmable Tx DAC Common-Mode DC Level and I/Q Offset Trim**
- **Excellent Dynamic Performance**
  SNR = 55dB at f_{IN} = 1.87MHz (Rx ADC)
  SFDR = 73dBc at f_{OUT} = 620kHz (Tx DAC)
- **Three 12-Bit, 1µs Aux-DACs**
- **10-Bit, 333ksps Aux-ADC with 4:1 Input Mux and Data Averaging**
- **Excellent Gain/Phase Match**
  ±0.08° Phase, ±0.02dB Gain (Rx ADC) at f_{IN} = 1.87MHz
- **Multiplexed Parallel Digital I/O**
- **Serial-Interface Control**
- **Versatile Power-Control Circuits**
  Shutdown, Standby, Idle, Tx/Rx Disable
- **Miniature 48-Pin Thin QFN Package (7mm x 7mm x 0.8mm)**

Pin Configuration

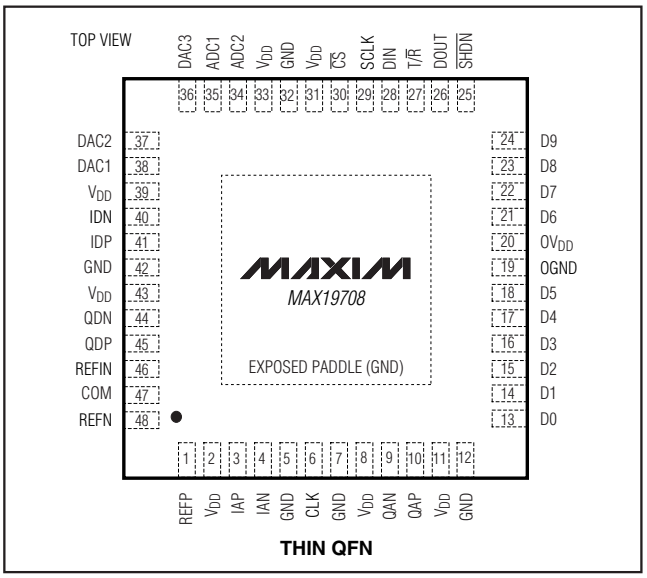

Functional Diagram and Selector Guide appear at end of data sheet.

For pricing, delivery, and ordering information, please contact Maxim/Dallas Direct! at 1-888-629-4642, or visit Maxim's website at www.maxim-ic.com.

10-Bit, 11Msps, Ultra-Low-Power Analog Front-End

ABSOLUTE MAXIMUM RATINGS

V_{DD} to GND, OV_{DD} to OGND .....-0.3V to +3.6V
GND to OGND.....-0.3V to +0.3V
IAP, IAN, QAP, QAN, IDP, IDN, QDP,
QDN, DAC1, DAC2, DAC3 to GND.....-0.3V to V_{DD}
ADC1, ADC2 to GND.....-0.3V to (V_{DD} + 0.3V)
REFP, REFN, REFIN, COM to GND .....-0.3V to (V_{DD} + 0.3V)
D0–D9, DOUT, T/$\overline{R}$, $\overline{SHDN}$, SCLK, DIN, $\overline{CS}$,
CLK to OGND .....-0.3V to (OV_{DD} + 0.3V)
Continuous Power Dissipation (T_A = +70°C)
48-Pin Thin QFN (derate 27.8mW/°C above +70°C) 2.22W
Thermal Resistance θ_{JA} .....36°C/W
Operating Temperature Range .....-40°C to +85°C
Junction Temperature.....+150°C
Storage Temperature Range .....-60°C to +150°C
Lead Temperature (soldering, 10s) .....+300°C

Stresses beyond those listed under "Absolute Maximum Ratings" may cause permanent damage to the device. These are stress ratings only, and functional operation of the device at these or any other conditions beyond those indicated in the operational sections of the specifications is not implied. Exposure to absolute maximum rating conditions for extended periods may affect device reliability.

ELECTRICAL CHARACTERISTICS

(V_{DD} = 3V, OV_{DD} = 1.8V, internal reference (1.024V), $C_L \approx$ 10pF on all digital outputs, f_{CLK} = 11MHz (50% duty cycle), Rx ADC input amplitude = -0.5dBFS, Tx DAC output amplitude = 0dBFS, differential Rx ADC input, differential Tx DAC output, C_{REFP} = C_{REFN} = C_{COM} = 0.33µF, unless otherwise noted. C_L < 5pF on all aux-DAC outputs. Typical values are at T_A = +25°C.) (Note 1)

PARAMETER	SYMBOL	CONDITIONS	MIN	TYP	MAX	UNITS
POWER REQUIREMENTS						
Analog Supply Voltage	V_{DD}		2.7	3.0	3.3	V
Output Supply Voltage	OV_{DD}		1.8		V_{DD}	V
V_{DD} Supply Current		Ext1-Tx, Ext3-Tx, and SPI2-Tx states; transmit DAC operating mode (Tx): f_{CLK} = 5.12MHz, f_{OUT} = 620kHz on both channels; aux-DACs ON and at midscale, aux-ADC ON		10.3		mA
		Ext2-Tx, Ext4-Tx, and SPI4-Tx states; transmit DAC operating mode (Tx): f_{CLK} = 5.12MHz, f_{OUT} = 620kHz on both channels; aux-DACs ON and at midscale, aux-ADC ON		12.6		
		Ext1-Rx, Ext4-Rx, and SPI3-Rx states; receive ADC operating mode (Rx): f_{CLK} = 5.12MHz, f_{IN} = 1.87MHz on both channels; aux-DACs ON and at midscale, aux-ADC ON		12.3		
		Ext2-Rx, Ext3-Rx, and SPI1-Rx states; receive ADC operating mode (Rx): f_{CLK} = 5.12MHz, f_{IN} = 1.87MHz on both channels; aux-DACs ON and at midscale, aux-ADC ON		6.6		
		Ext2-Tx, Ext4-Tx, and SPI4-Tx states; transmit DAC operating mode (Tx): f_{CLK} = 11MHz, f_{OUT} = 620kHz on both channels, aux-DACs ON and at midscale, aux-ADC ON		14.1	16	

ELECTRICAL CHARACTERISTICS (continued)

(V_{DD} = 3V, OV_{DD} = 1.8V, internal reference (1.024V), $C_L \approx$ 10pF on all digital outputs, f_{CLK} = 11MHz (50% duty cycle), Rx ADC input amplitude = -0.5dBFS, Tx DAC output amplitude = 0dBFS, differential Rx ADC input, differential Tx DAC output, C_{REFP} = C_{REFN} = C_{COM} = 0.33µF, unless otherwise noted. C_L < 5pF on all aux-DAC outputs. Typical values are at T_A = +25°C.) (Note 1)

PARAMETER	SYMBOL	CONDITIONS	MIN	TYP	MAX	UNITS
V_{DD} Supply Current		Ext1-Tx, Ext3-Tx, and SPI2-Tx states; transmit DAC operating mode (Tx): f_{CLK} = 11MHz, f_{OUT} = 620kHz on both channels, aux-DACs ON and at midscale, aux-ADC ON		11.7		mA
		Ext1-Rx, Ext4-Rx, and SPI3-Rx states; receive ADC operating mode (Rx): f_{CLK} = 11MHz, f_{IN} = 1.87MHz on both channels, aux-DACs ON and at midscale, aux-ADC ON		13.7	16	
		Ext2-Rx, Ext3-Rx, and SPI1-Rx states; receive ADC operating mode (Rx): f_{CLK} = 11MHz, f_{IN} = 1.87MHz on both channels, aux-DACs ON and at midscale, aux-ADC ON		8		
		Standby mode: CLK = 0 or OV_{DD}; aux-DACs ON and at midscale, aux-ADC ON		2.9	4	
		Idle mode: f_{CLK} = 11MHz; aux-DACs ON and at midscale, aux-ADC ON		5.5	7	
		Shutdown mode: CLK = 0 or OV_{DD}		0.52		µA
OV_{DD} Supply Current		Ext1-Rx, Ext2-Rx, Ext3-Rx, Ext4-Rx, SPI1-Rx, SPI3-Rx states; receive ADC operating mode (Rx): f_{CLK} = 11MHz, f_{IN} = 1.87MHz on both channels; aux-DACs ON and at midscale, aux-ADC ON		1.5		mA
		Ext1-Tx, Ext2-Tx, Ext3-Tx, Ext4-Tx, SPI2-Tx, SPI4-Tx states; transmit DAC operating mode (Tx): f_{CLK} = 11MHz, f_{OUT} = 620kHz on both channels; aux-DACs ON and at midscale, aux-ADC ON		110		µA
		Standby mode: CLK = 0 or OV_{DD}; aux-DACs ON and at midscale, aux-ADC ON		1		
		Idle mode: f_{CLK} = 11MHz; aux-DACs ON and at midscale, aux-ADC ON		19		
		Shutdown mode: CLK = 0 or OV_{DD}		0.1		

10-Bit, 11Msps, Ultra-Low-Power Analog Front-End

ELECTRICAL CHARACTERISTICS (continued)

(V_{DD} = 3V, OV_{DD} = 1.8V, internal reference (1.024V), $C_L \approx$ 10pF on all digital outputs, f_{CLK} = 11MHz (50% duty cycle), Rx ADC input amplitude = -0.5dBFS, Tx DAC output amplitude = 0dBFS, differential Rx ADC input, differential Tx DAC output, C_{REFP} = C_{REFN} = C_{COM} = 0.33µF, unless otherwise noted. C_L < 5pF on all aux-DAC outputs. Typical values are at T_A = +25°C.) (Note 1)

PARAMETER	SYMBOL	CONDITIONS	MIN	TYP	MAX	UNITS
Rx ADC DC ACCURACY						
Resolution	N			10		Bits
Integral Nonlinearity	INL			±0.9		LSB
Differential Nonlinearity	DNL	Guaranteed no missing code (Note 2)	-1.0	±0.4	+1.2	LSB
Offset Error		Residual DC offset error	-5	±0.1	+5	%FS
Gain Error		Include reference error	-7.0	±1.5	+10.5	%FS
DC Gain Matching			-0.25	±0.01	+0.25	dB
Offset Matching				±10		LSB
Gain Temperature Coefficient				±18.4		ppm/°C
Power-Supply Rejection	PSRR	Offset error (V_{DD} ±5%)		±2		LSB
		Gain error (V_{DD} ±5%)		±0.07		%FS
Rx ADC ANALOG INPUT						
Input Differential Range	V_{ID}	Differential or single-ended inputs		±0.512		V
Input Common-Mode Voltage Range	V_{CM}			V_{DD} / 2		V
Input Impedance	R_{IN}	Switched capacitor load		491		kΩ
	C_{IN}			5		pF
Rx ADC CONVERSION RATE						
Maximum Clock Frequency	f_{CLK}	(Note 3)			11	MHz
Data Latency (Figure 3)		Channel I		5		Clock Cycles
		Channel Q		5.5		
Rx ADC DYNAMIC CHARACTERISTICS (Note 4)						
Signal-to-Noise Ratio	SNR	f_{IN} = 1.875MHz, f_{CLK} = 11MHz	53.3	55		dB
		f_{IN} = 3.5MHz, f_{CLK} = 11MHz		55		
Signal-to-Noise and Distortion	SINAD	f_{IN} = 1.875MHz, f_{CLK} = 11MHz	53.2	54.9		dB
		f_{IN} = 3.5MHz, f_{CLK} = 11MHz		54.9		
Spurious-Free Dynamic Range	SFDR	f_{IN} = 1.875MHz, f_{CLK} = 11MHz	63.5	77.4		dBc
		f_{IN} = 3.5MHz, f_{CLK} = 11MHz		78.3		
Third-Harmonic Distortion	HD3	f_{IN} = 1.875MHz, f_{CLK} = 11MHz		-84.3		dBc
		f_{IN} = 3.5MHz, f_{CLK} = 11MHz		-85		
Intermodulation Distortion	IMD	f_1 = 1.8MHz, -7dBFS; f_2 = 1MHz, -7dBFS		-72.7		dBc
Third-Order Intermodulation Distortion	IM3	f_1 = 1.8MHz, -7dBFS; f_2 = 1MHz, -7dBFS		-74.4		dBc
Total Harmonic Distortion	THD	f_{IN} = 1.875MHz, f_{CLK} = 11MHz		-75.6	-63	dB
		f_{IN} = 3.5MHz, f_{CLK} = 11MHz		-76.3		
Aperture Delay				3.5		ns
Overdrive Recovery Time		1.5x full-scale input		2		ns

ELECTRICAL CHARACTERISTICS (continued)

(V_{DD} = 3V, OV_{DD} = 1.8V, internal reference (1.024V), $C_L \approx$ 10pF on all digital outputs, f_{CLK} = 11MHz (50% duty cycle), Rx ADC input amplitude = -0.5dBFS, Tx DAC output amplitude = 0dBFS, differential Rx ADC input, differential Tx DAC output, C_{REFP} = C_{REFN} = C_{COM} = 0.33µF, unless otherwise noted. C_L < 5pF on all aux-DAC outputs. Typical values are at T_A = +25°C.) (Note 1)

PARAMETER	SYMBOL	CONDITIONS	MIN	TYP	MAX	UNITS
Rx ADC INTERCHANNEL CHARACTERISTICS						
Crosstalk Rejection		$f_{INX,Y}$ = 1.875MHz at -0.5dBFS, $f_{INX,Y}$ = 1MHz at -0.5dBFS (Note 5)		-90		dB
Amplitude Matching		f_{IN} = 1.875MHz at -0.5dBFS (Note 6)		±0.02		dB
Phase Matching		f_{IN} = 1.875MHz at -0.5dBFS (Note 6)		±0.08		Degrees
Tx DAC DC ACCURACY						
Resolution	N			10		Bits
Integral Nonlinearity	INL			±0.45		LSB
Differential Nonlinearity	DNL	Guaranteed monotonic (Note 2)	-1	±0.4	+1	LSB
Residual DC Offset	V_{OS}	T_A > +25°C	-4	±1	+4	mV
		T_A < +25°C	-5.5	±1	+5.5	
Full-Scale Gain Error		Include reference error (peak-to-peak error)	-50		+50	mV
Tx PATH DYNAMIC PERFORMANCE						
Corner Frequency		3dB corner	1.05	1.32	1.65	MHz
Passband Ripple		DC to 640kHz (Note 2)		0.15	0.5	dB_{P-P}
Group Delay Variation in Passband		DC to 640kHz		50		ns
Error-Vector Magnitude	EVM	DC to 700kHz		2		%
Stopband Rejection		f_{IMAGE} = 4.32MHz, f_{OUT} = 800kHz, f_{CLK} = 5.12MHz	55	62.5		dBc
Baseband Attenuation		Spot relative to 100kHz, 2MHz		21.5		dB
		Spot relative to 100kHz, 4MHz		49		
		Spot relative to 100kHz, 5MHz		58		
		Spot relative to 100kHz, 10MHz		90		
		Spot relative to 100kHz, 20MHz		90		
DAC Conversion Rate	f_{CLK}	(Note 3)			11	MHz
In-Band Noise Density	N_D	f_{OUT} = 620kHz, f_{CLK} = 5.12MHz, offset = 500kHz		-120.6		dBc/Hz
Third-Order Intermodulation Distortion	IM3	f_1 = 620kHz, f_2 = 640kHz		82		dBc
Glitch Impulse				10		pV•s
Spurious-Free Dynamic Range to Nyquist	SFDR	f_{CLK} = 11MHz, f_{OUT} = 620kHz	60	73		dBc
Total Harmonic Distortion to Nyquist	THD	f_{CLK} = 11MHz, f_{OUT} = 620kHz		-71	-60	dB
Signal-to-Noise Ratio to Nyquist	SNR	f_{CLK} = 11MHz, f_{OUT} = 620kHz		56.5		dB

10-Bit, 11Msps, Ultra-Low-Power Analog Front-End

ELECTRICAL CHARACTERISTICS (continued)

(V_{DD} = 3V, OV_{DD} = 1.8V, internal reference (1.024V), $C_L \approx$ 10pF on all digital outputs, f_{CLK} = 11MHz (50% duty cycle), Rx ADC input amplitude = -0.5dBFS, Tx DAC output amplitude = 0dBFS, differential Rx ADC input, differential Tx DAC output, C_{REFP} = C_{REFN} = C_{COM} = 0.33µF, unless otherwise noted. C_L < 5pF on all aux-DAC outputs. Typical values are at T_A = +25°C.) (Note 1)

PARAMETER	SYMBOL	CONDITIONS	MIN	TYP	MAX	UNITS
Tx PATH INTERCHANNEL CHARACTERISTICS						
I-to-Q Output Isolation		$f_{OUTX,Y}$ = 500kHz, $f_{OUTX,Y}$ = 620kHz		90		dB
Gain Mismatch Between DAC Outputs		Measured at DC	-0.30	±0.02	+0.31	dB
Phase Mismatch Between DAC Outputs		f_{OUT} = 620kHz, f_{CLK} = 11MHz		±0.04		Degrees
Differential Output Impedance				800		Ω
Tx PATH ANALOG OUTPUT						
Full-Scale Output Voltage (Table 8)	V_{FS}	Bit E7 = 0 (default)		±410		mV
		Bit E7 = 1		±500		
Output Common-Mode Voltage (Table 11)	V_{COM}	Bits CM1 = 0, CM0 = 0 (default)	1.27	1.4	1.48	V
		Bits CM1 = 0, CM0 = 1		1.25		
		Bits CM1 = 1, CM0 = 0		1.1		
		Bits CM1 = 1, CM0 = 1		0.9		
Rx ADC–Tx DAC INTERCHANNEL CHARACTERISTICS						
Receive Transmit Isolation		ADC f_{INI} = f_{INQ} = 1.875MHz, DAC f_{OUTI} = f_{OUTQ} = 620kHz, f_{CLK} = 11MHz		90		dB
AUXILIARY ADC (ADC1, ADC2)						
Resolution	N			10		Bits
Full-Scale Reference	V_{REF}	AD1 = 0 (default)		2.048		V
		AD1 = 1		V_{DD}		
Analog Input Range				0 to V_{REF}		V
Analog Input Impedance		At DC		500		kΩ
Input-Leakage Current		Measured at unselected input from 0 to V_{REF}		±0.1		µA
Gain Error	GE	Includes reference error	-5		+5	%FS
Zero-Code Error	ZE			2		mV
Differential Nonlinearity	DNL			±0.53		LSB
Integral Nonlinearity	INL			±0.45		LSB
Supply Current				210		µA

ELECTRICAL CHARACTERISTICS (continued)

(V_{DD} = 3V, OV_{DD} = 1.8V, internal reference (1.024V), $C_L \approx$ 10pF on all digital outputs, f_{CLK} = 11MHz (50% duty cycle), Rx ADC input amplitude = -0.5dBFS, Tx DAC output amplitude = 0dBFS, differential Rx ADC input, differential Tx DAC output, C_{REFP} = C_{REFN} = C_{COM} = 0.33µF, unless otherwise noted. C_L < 5pF on all aux-DAC outputs. Typical values are at T_A = +25°C.) (Note 1)

PARAMETER	SYMBOL	CONDITIONS	MIN	TYP	MAX	UNITS
AUXILIARY DACs (DAC1, DAC2, DAC3)						
Resolution	N			12		Bits
Integral Nonlinearity	INL			±1.25		LSB
Differential Nonlinearity	DNL	Guaranteed monotonic over codes 100 to 4000 (Note 2)	-1.0	±0.65	+1.2	LSB
Gain Error	GE	R_L > 200kΩ		±0.7		%FS
Zero-Code Error	ZE			±0.6		%FS
Output-Voltage Low	V_{OL}	R_L > 200kΩ			0.1	V
Output-Voltage High	V_{OH}	R_L > 200kΩ	2.56			V
DC Output Impedance		DC output at midscale		4		Ω
Settling Time		From 1/4 FS to 3/4 FS, within ±10 LSB		1		µs
Glitch Impulse		From 0 to FS transition		24		nV•s
Rx ADC-Tx DAC TIMING CHARACTERISTICS						
CLK Rise to Channel-I Output Data Valid	t_{DOI}	Figure 3 (Note 2)	5.3	7.0	8.5	ns
CLK Fall to Channel-Q Output Data Valid	t_{DOQ}	Figure 3 (Note 2)	6.8	9.1	11.3	ns
I-DAC DATA to CLK Fall Setup Time	t_{DSI}	Figure 6 (Note 2)	10			ns
Q-DAC DATA to CLK Rise Setup Time	t_{DSQ}	Figure 6 (Note 2)	10			ns
CLK Fall to I-DAC Data Hold Time	t_{DHI}	Figure 6 (Note 2)	0			ns
CLK Rise to Q-DAC Data Hold Time	t_{DHQ}	Figure 6 (Note 2)	0			ns
CLK Duty Cycle				50		%
CLK Duty-Cycle Variation				±15		%
Digital Output Rise/Fall Time		20% to 80%		2.5		ns
SERIAL-INTERFACE TIMING CHARACTERISTICS (Figure 7, Note 2)						
Falling Edge of $\overline{CS}$ to Rising Edge of First SCLK Time	t_{CSS}		10			ns
DIN to SCLK Setup Time	t_{DS}		10			ns
DIN to SCLK Hold Time	t_{DH}		0			ns
SCLK Pulse-Width High	t_{CH}		25			ns
SCLK Pulse-Width Low	t_{CL}		25			ns
SCLK Period	t_{CP}		50			ns
SCLK to $\overline{CS}$ Setup Time	t_{CS}		10			ns
$\overline{CS}$ High Pulse Width	t_{CSW}		80			ns
$\overline{CS}$ High to DOUT Active High	t_{CSD}	Bit AD0 set		200		ns

10-Bit, 11Msps, Ultra-Low-Power Analog Front-End

ELECTRICAL CHARACTERISTICS (continued)

(V_{DD} = 3V, OV_{DD} = 1.8V, internal reference (1.024V), $C_L \approx$ 10pF on all digital outputs, f_{CLK} = 11MHz (50% duty cycle), Rx ADC input amplitude = -0.5dBFS, Tx DAC output amplitude = 0dBFS, differential Rx ADC input, differential Tx DAC output, C_{REFP} = C_{REFN} = C_{COM} = 0.33µF, unless otherwise noted. C_L < 5pF on all aux-DAC outputs. Typical values are at T_A = +25°C.) (Note 1)

PARAMETER	SYMBOL	CONDITIONS	MIN	TYP	MAX	UNITS
$\overline{CS}$ High to DOUT Low (Aux-ADC Conversion Time)	t_{CONV}	Bit AD0 set, no averaging (see Table 15), f_{CLK} = 11MHz, CLK divider = 4 (see Table 16)		4.36		µs
DOUT Low to $\overline{CS}$ Setup Time	t_{DCS}	Bit AD0, AD10 set		200		ns
SCLK Low to DOUT Data Out	t_{CD}	Bit AD0, AD10 set			14.5	ns
$\overline{CS}$ High to DOUT High Impedance	t_{CHZ}	Bit AD0, AD10 set		200		ns
MODE-RECOVERY TIMING CHARACTERISTICS (Figure 8)						
Shutdown Wake-Up Time	$t_{WAKE,SD}$	From shutdown to Rx mode, ADC settles to within 1dB SINAD		82.2		µs
		From shutdown to Tx mode, DAC settles to within 10 LSB error		29		
Idle Wake-Up Time (With CLK)	$t_{WAKE,ST0}$	From idle to Rx mode with CLK present during idle, ADC settles to within 1dB SINAD		9.6		µs
		From idle to Tx mode with CLK present during idle, DAC settles to 10 LSB error		7.6		
Standby Wake-Up Time	$t_{WAKE,ST1}$	From standby to Rx mode, ADC settles to within 1dB SINAD		17.5		µs
		From standby to Tx mode, DAC settles to 10 LSB error		24		
Enable Time from Tx to Rx (Ext2-Tx to Ext2-Rx, Ext4-Tx to Ext4-Rx, and SPI4-Tx to SPI3-Rx States)	$t_{ENABLE, RX}$	ADC settles to within 1dB SINAD		500		ns
Enable Time from Rx to Tx (Ext1-Rx to Ext1-Tx, Ext4-Rx to Ext4-Tx, and SPI3-Rx to SPI4-Tx States)	$t_{ENABLE, TX}$	DAC settles to within 10 LSB error		500		ns
Enable Time from Tx to Rx (Ext1-Tx to Ext1-Rx, Ext3-Tx to Ext3-Rx, and SPI1-Tx to SPI1-Rx States)	$t_{ENABLE, RX}$	ADC settles to within 1dB SINAD		8.1		µs
Enable Time from Rx to Tx (Ext2-Rx to Ext2-Tx, Ext3-Rx to Ext3-Tx, and SPI1-Rx to SPI2-Tx States)	$t_{ENABLE,TX}$	DAC settles to within 10 LSB error		7.0		µs
INTERNAL REFERENCE (V_{REFIN} = V_{DD}; V_{REFP}, V_{REFN}, V_{COM} levels are generated internally)						
Positive Reference		V_{REFP} - V_{COM}		0.256		V
Negative Reference		V_{REFN} - V_{COM}		-0.256		V
Common-Mode Output Voltage	V_{COM}		V_{DD} / 2 - 0.15	V_{DD} / 2	V_{DD} / 2 + 0.15	V
Maximum REFP/REFN/COM Source Current	I_{SOURCE}			2		mA

ELECTRICAL CHARACTERISTICS (continued)

(V_{DD} = 3V, OV_{DD} = 1.8V, internal reference (1.024V), $C_L \approx$ 10pF on all digital outputs, f_{CLK} = 11MHz (50% duty cycle), Rx ADC input amplitude = -0.5dBFS, Tx DAC output amplitude = 0dBFS, differential Rx ADC input, differential Tx DAC output, C_{REFP} = C_{REFN} = C_{COM} = 0.33µF, unless otherwise noted. C_L < 5pF on all aux-DAC outputs. Typical values are at T_A = +25°C.) (Note 1)

PARAMETER	SYMBOL	CONDITIONS	MIN	TYP	MAX	UNITS
Maximum REFP/REFN/COM Sink Current	I_{SINK}			2		mA
Differential Reference Output	V_{REF}	V_{REFP} - V_{REFN}	+0.460	+0.512	+0.548	V
Differential Reference Temperature Coefficient	REFTC			±18		ppm/°C
BUFFERED EXTERNAL REFERENCE (external V_{REFIN} = 1.024V applied; V_{REFP}, V_{REFN}, V_{COM} levels are generated internally)						
Reference Input Voltage	V_{REFIN}			1.024		V
Differential Reference Output	V_{DIFF}	V_{REFP} - V_{REFN}		0.512		V
Common-Mode Output Voltage	V_{COM}			V_{DD} / 2		V
Maximum REFP/REFN/COM Source Current	I_{SOURCE}			2		mA
Maximum REFP/REFN/COM Sink Current	I_{SINK}			2		mA
REFIN Input Current				-0.7		µA
REFIN Input Resistance				500		kΩ
DIGITAL INPUTS (CLK, SCLK, DIN, $\overline{CS}$, D0–D9, T/$\overline{R}$, $\overline{SHDN}$)						
Input High Threshold	V_{INH}		0.7 x OV_{DD}			V
Input Low Threshold	V_{INL}				0.3 x OV_{DD}	V
Input Leakage	DI_{IN}	D0–D9, CLK, SCLK, DIN, $\overline{CS}$, T/$\overline{R}$, $\overline{SHDN}$ = OGND or OV_{DD}	-1		+1	µA
Input Capacitance	DC_{IN}			5		pF
DIGITAL OUTPUTS (D0–D9, DOUT)						
Output-Voltage Low	V_{OL}	I_{SINK} = 200µA			0.2 x OV_{DD}	V
Output-Voltage High	V_{OH}	I_{SOURCE} = 200µA	0.8 x OV_{DD}			V
Tri-State Leakage Current	I_{LEAK}		-1		+1	µA
Tri-State Output Capacitance	C_{OUT}			5		pF

Note 1: Specifications from T_A = +25°C to +85°C are guaranteed by production tests. Specifications from T_A = +25°C to -40°C are guaranteed by design and characterization.

Note 2: Guaranteed by design and characterization.

Note 3: The minimum clock frequency (f_{CLK}) for the MAX19708 is 1.5MHz (typ). The minimum aux-ADC sample rate clock frequency (ACLK) is determined by f_{CLK} and the chosen aux-ADC clock-divider value. The minimum aux-ADC ACLK > 1.5MHz / 128 = 11.7kHz. The aux-ADC conversion time does not include the time to clock the serial data out of the SPI. The maximum conversion time (for no averaging, NAVG = 1) will be t_{CONV} (max) = (12 x 1 x 128) / 1.5MHz = 1024µs.

Note 4: SNR, SINAD, SFDR, HD3, and THD are based on a differential analog input voltage of -0.5dBFS referenced to the amplitude of the digital outputs. SINAD and THD are calculated using HD2 through HD6.

Note 5: Crosstalk rejection is measured by applying a high-frequency test tone to one channel and a low-frequency tone to the second channel. FFTs are performed on each channel. The parameter is specified as the power ratio of the first and second channel FFT test tone.

Note 6: Amplitude and phase matching is measured by applying the same signal to each channel, and comparing the two output signals using a sine-wave fit.

10-Bit, 11Msps, Ultra-Low-Power Analog Front-End

Typical Operating Characteristics

(V_{DD} = 3V, OV_{DD} = 1.8V, internal reference (1.024V), $C_L \approx$ 10pF on all digital outputs, f_{CLK} = 11MHz (50% duty cycle), Rx ADC input amplitude = -0.5dBFS, Tx DAC output amplitude = 0dBFS, differential Rx ADC input, differential Tx DAC output, C_{REFP} = C_{REFN} = C_{COM} = 0.33µF, T_A = +25°C, unless otherwise noted.)

Rx ADC CHANNEL-IA FFT PLOT

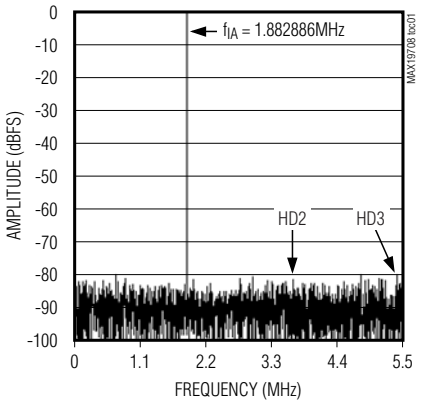

Rx ADC CHANNEL-QA FFT PLOT

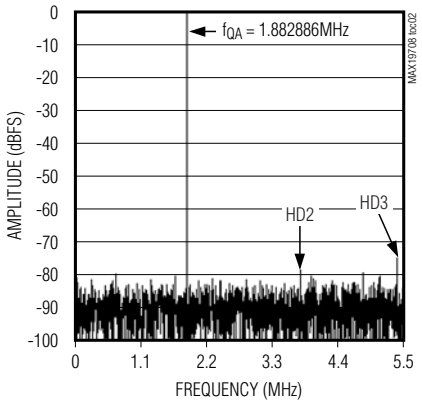

Rx ADC CHANNEL-IA TWO-TONE FFT PLOT

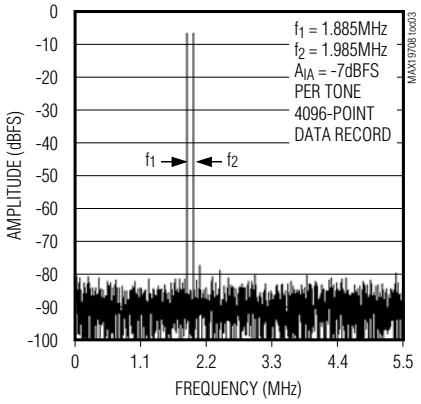

Rx ADC CHANNEL-QA TWO-TONE FFT PLOT

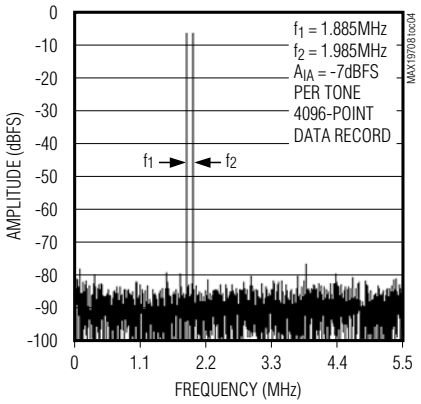

Rx ADC SIGNAL-TO-NOISE RATIO vs. ANALOG INPUT FREQUENCY

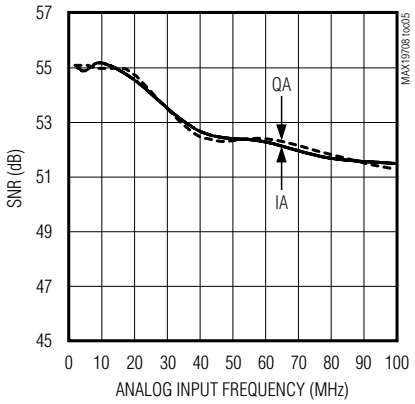

Rx ADC SIGNAL-TO-NOISE AND DISTORTION RATIO vs. ANALOG INPUT FREQUENCY

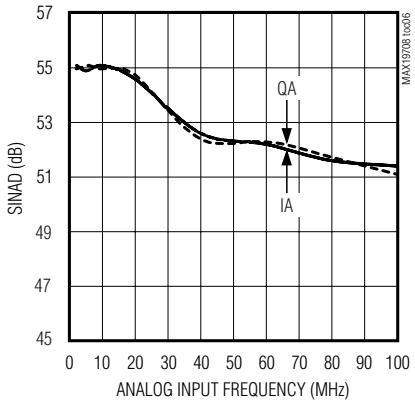

Rx ADC TOTAL HARMONIC DISTORTION vs. ANALOG INPUT FREQUENCY

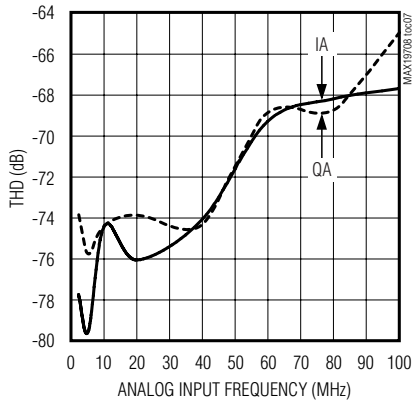

Rx ADC SPURIOUS-FREE DYNAMIC RANGE vs. ANALOG INPUT FREQUENCY

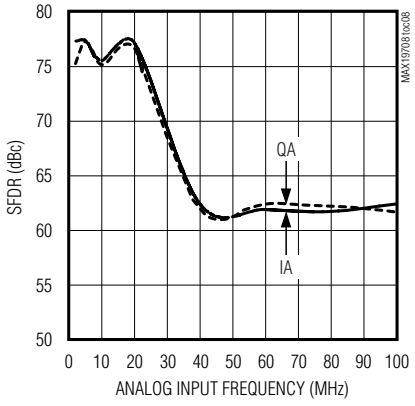

Rx ADC SIGNAL-TO-NOISE RATIO vs. ANALOG INPUT AMPLITUDE

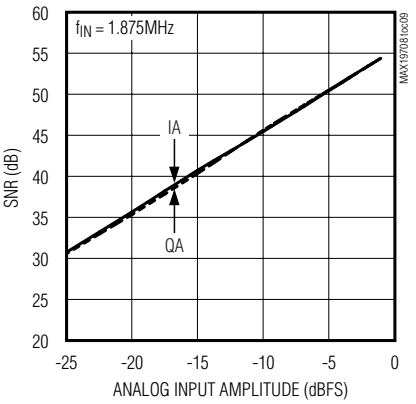

Typical Operating Characteristics (continued)

(V_{DD} = 3V, OV_{DD} = 1.8V, internal reference (1.024V), $C_L \approx$ 10pF on all digital outputs, f_{CLK} = 11MHz (50% duty cycle), Rx ADC input amplitude = -0.5dBFS, Tx DAC output amplitude = 0dBFS, differential Rx ADC input, differential Tx DAC output, C_{REFP} = C_{REFN} = C_{COM} = 0.33µF, T_A = +25°C, unless otherwise noted.)

Rx ADC SIGNAL-TO-NOISE AND DISTORTION RATIO vs. ANALOG INPUT AMPLITUDE

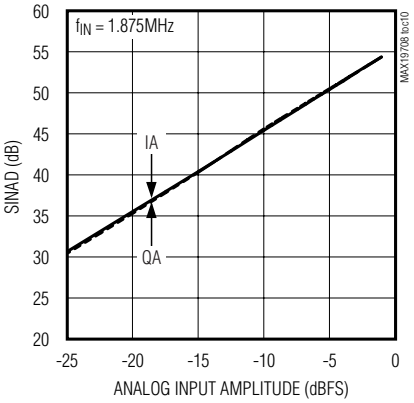

Rx ADC SPURIOUS-FREE DYNAMIC RANGE vs. ANALOG INPUT AMPLITUDE

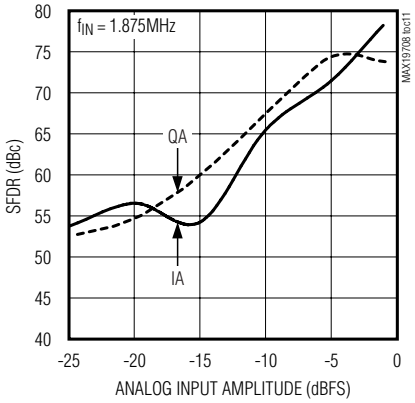

Rx ADC SIGNAL-TO-NOISE RATIO vs. SAMPLING RATE

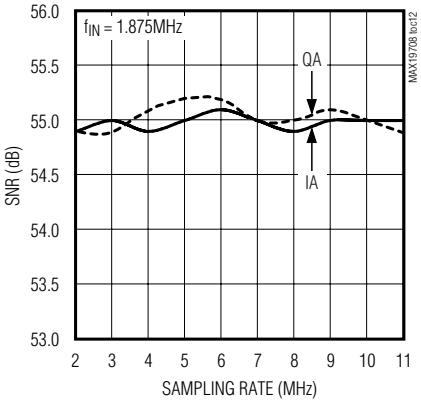

Rx ADC SIGNAL-TO-NOISE AND DISTORTION RATIO vs. SAMPLING RATE

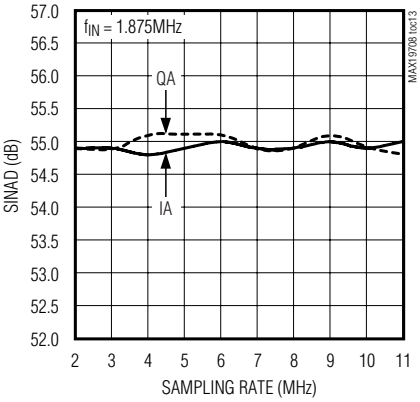

Rx ADC SPURIOUS-FREE DYNAMIC RANGE vs. SAMPLING RATE

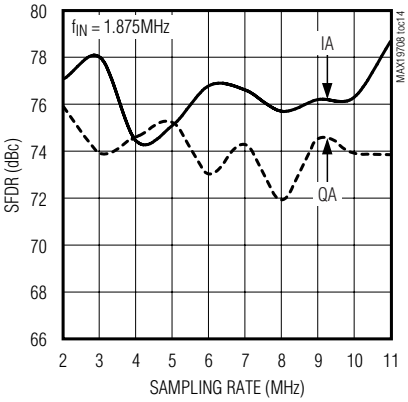

Rx ADC SIGNAL-TO-NOISE RATIO vs. CLOCK DUTY CYCLE

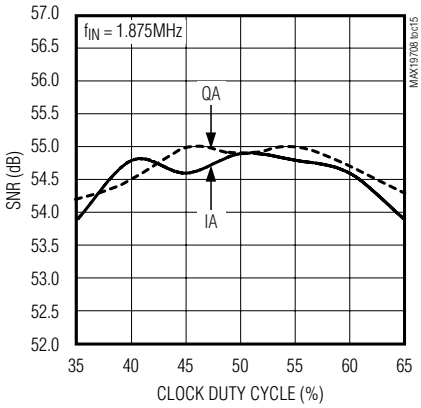

Rx ADC SIGNAL-TO-NOISE AND DISTORTION RATIO vs. CLOCK DUTY CYCLE

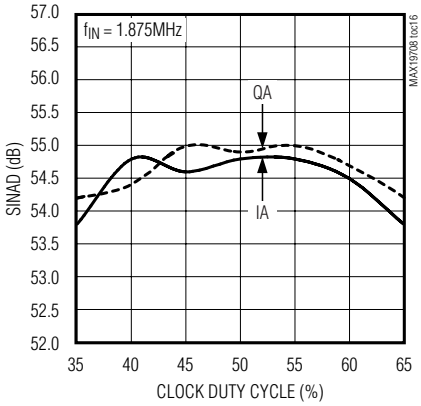

Rx ADC SPURIOUS-FREE DYNAMIC RANGE vs. CLOCK DUTY CYCLE

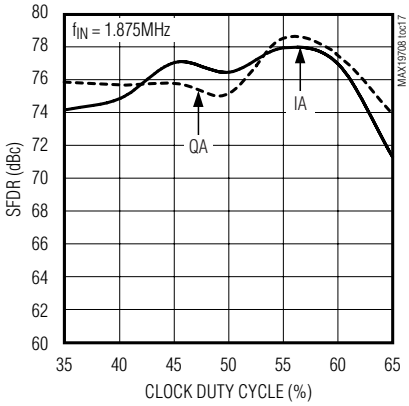

Rx ADC OFFSET ERROR vs. TEMPERATURE

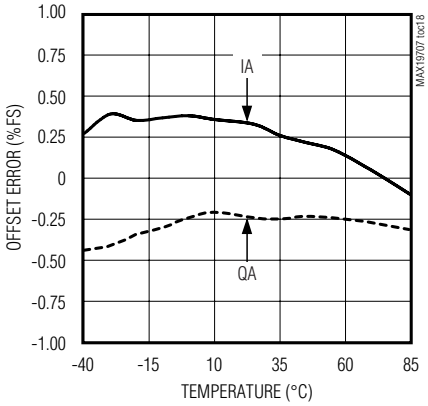

10-Bit, 11Msps, Ultra-Low-Power Analog Front-End

Typical Operating Characteristics (continued)

(V_{DD} = 3V, OV_{DD} = 1.8V, internal reference (1.024V), $C_L \approx$ 10pF on all digital outputs, f_{CLK} = 11MHz (50% duty cycle), Rx ADC input amplitude = -0.5dBFS, Tx DAC output amplitude = 0dBFS, differential Rx ADC input, differential Tx DAC output, C_{REFP} = C_{REFN} = C_{COM} = 0.33µF, T_A = +25°C, unless otherwise noted.)

Rx ADC GAIN ERROR vs. TEMPERATURE

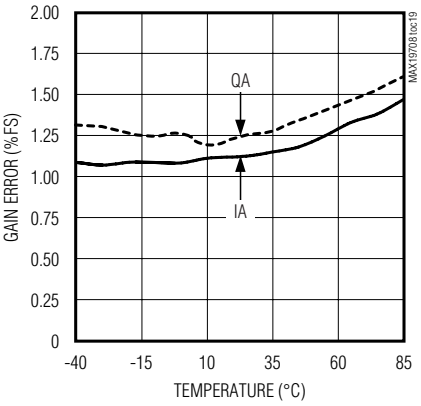

Tx PATH SPURIOUS-FREE DYNAMIC RANGE vs. SAMPLING RATE

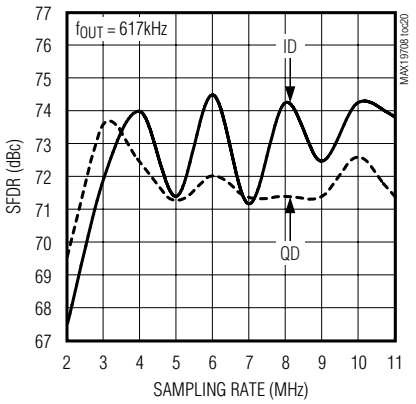

Tx PATH SPURIOUS-FREE DYNAMIC RANGE vs. OUTPUT FREQUENCY

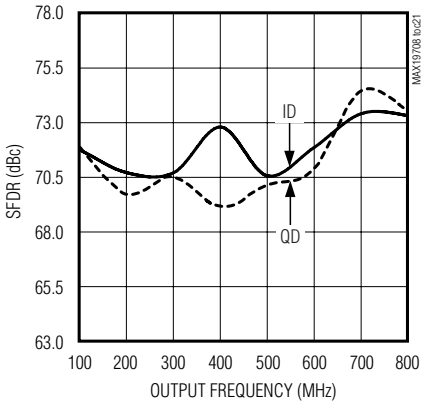

Tx PATH SPURIOUS-FREE DYNAMIC RANGE vs. OUTPUT AMPLITUDE

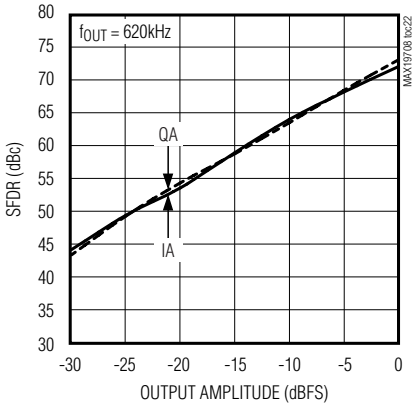

Tx PATH CHANNEL-ID SPECTRAL PLOT

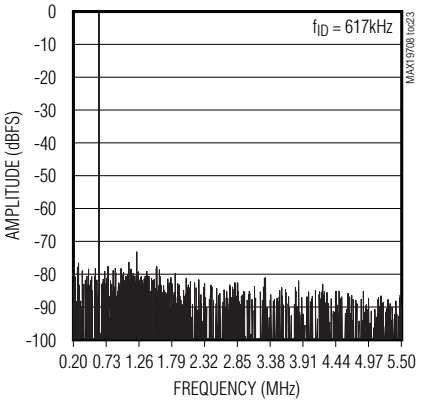

Tx PATH CHANNEL-QD SPECTRAL PLOT

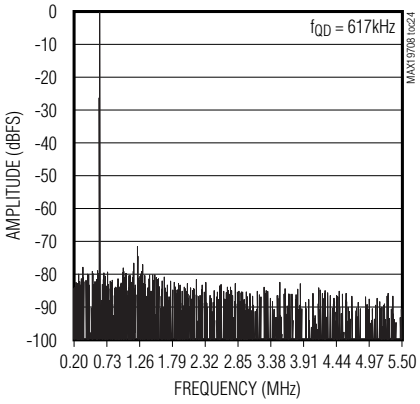

Tx PATH CHANNEL-ID SPECTRAL PLOT WITH IMAGE REJECTION

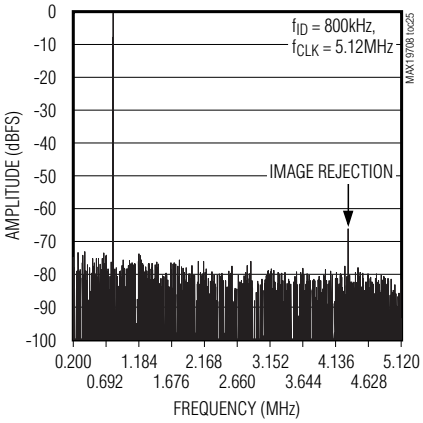

Tx PATH CHANNEL-ID TWO-TONE SPECTRAL PLOT

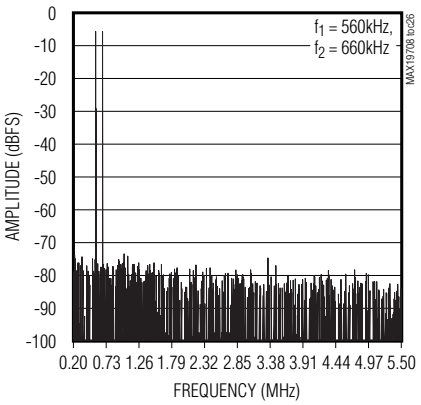

Tx PATH CHANNEL-QD TWO-TONE SPECTRAL PLOT

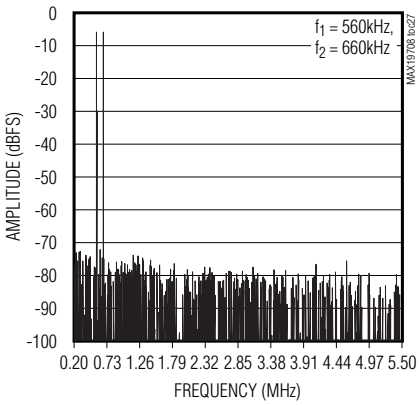

Typical Operating Characteristics (continued)

(V_{DD} = 3V, OV_{DD} = 1.8V, internal reference (1.024V), $C_L \approx$ 10pF on all digital outputs, f_{CLK} = 11MHz (50% duty cycle), Rx ADC input amplitude = -0.5dBFS, Tx DAC output amplitude = 0dBFS, differential Rx ADC input, differential Tx DAC output, C_{REFP} = C_{REFN} = C_{COM} = 0.33µF, T_A = +25°C, unless otherwise noted.)

SUPPLY CURRENT vs. SAMPLING RATE

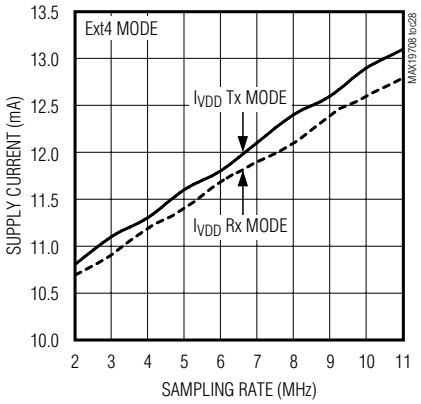

Rx ADC INTEGRAL NONLINEARITY

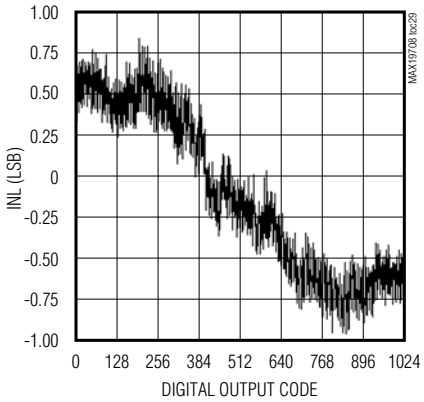

TRANSMIT FILTER FREQUENCY RESPONSE

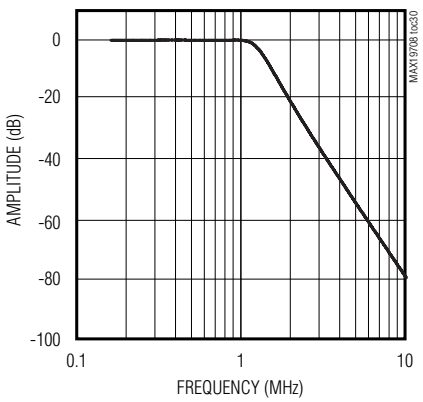

Tx PATH INTEGRAL NONLINEARITY

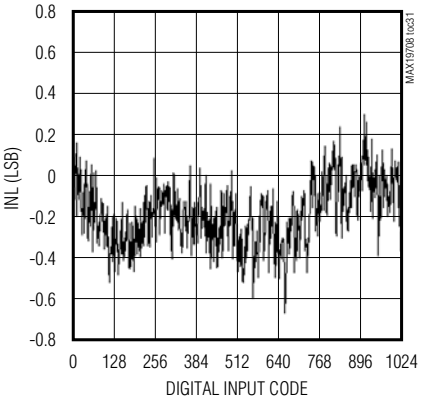

Tx PATH DIFFERENTIAL NONLINEARITY

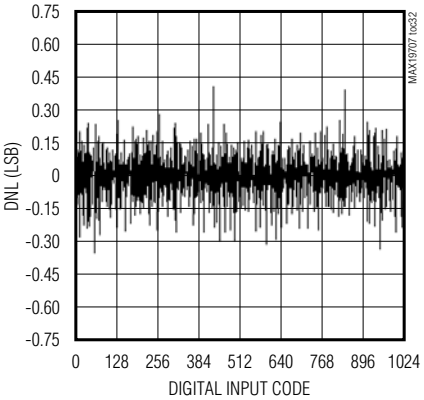

REFERENCE OUTPUT VOLTAGE vs. TEMPERATURE

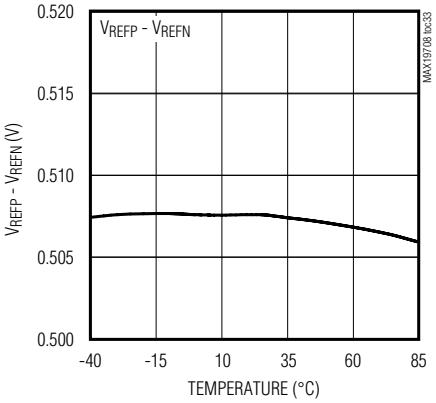

TRANSMIT FILTER PASSBAND RIPPLE

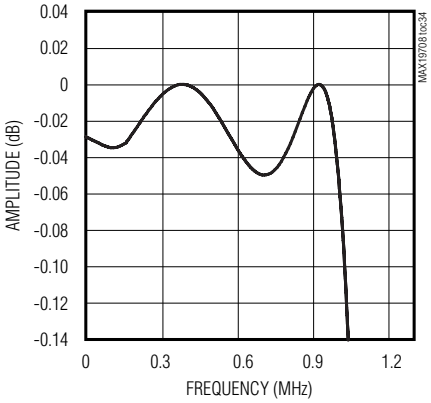

AUX-DAC INTEGRAL NONLINEARITY

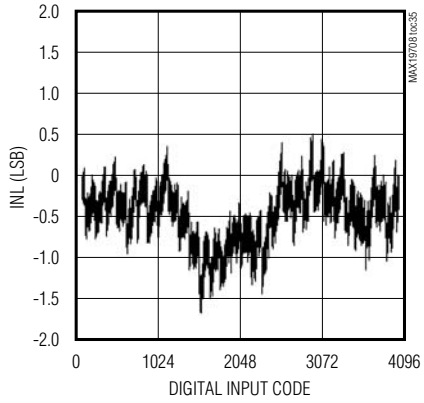

AUX-DAC DIFFERENTIAL NONLINEARITY

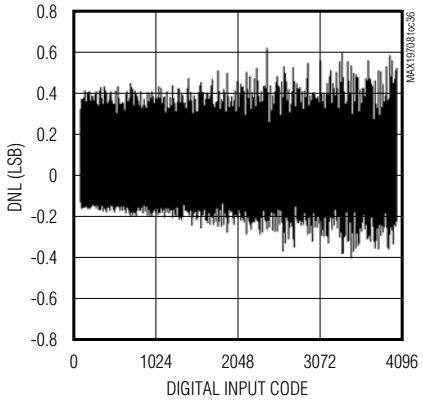

10-Bit, 11Msps, Ultra-Low-Power Analog Front-End

Typical Operating Characteristics (continued)

(V_{DD} = 3V, OV_{DD} = 1.8V, internal reference (1.024V), $C_L \approx$ 10pF on all digital outputs, f_{CLK} = 11MHz (50% duty cycle), Rx ADC input amplitude = -0.5dBFS, Tx DAC output amplitude = 0dBFS, differential Rx ADC input, differential Tx DAC output, C_{REFP} = C_{REFN} = C_{COM} = 0.33µF, T_A = +25°C, unless otherwise noted.)

AUX-ADC INTEGRAL NONLINEARITY

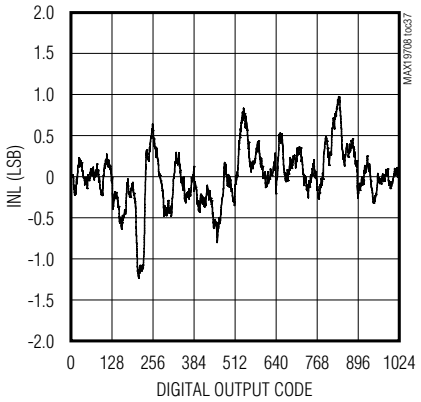

AUX-ADC DIFFERENTIAL NONLINEARITY

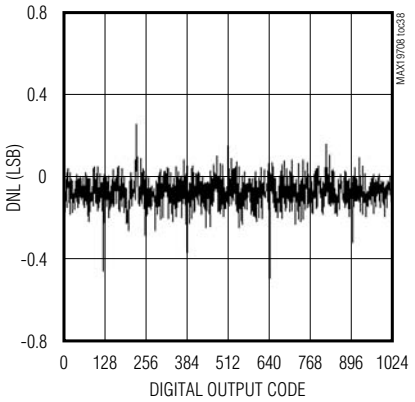

AUX-DAC OUTPUT VOLTAGE vs. OUTPUT SOURCE CURRENT

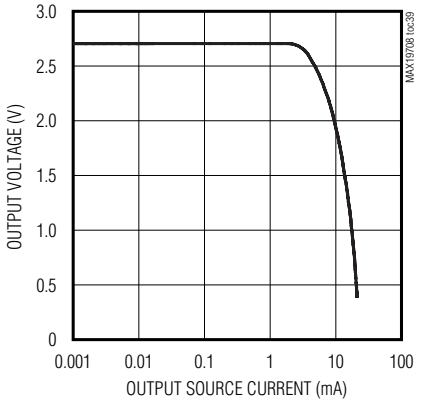

AUX-DAC OUTPUT VOLTAGE vs. OUTPUT SINK CURRENT

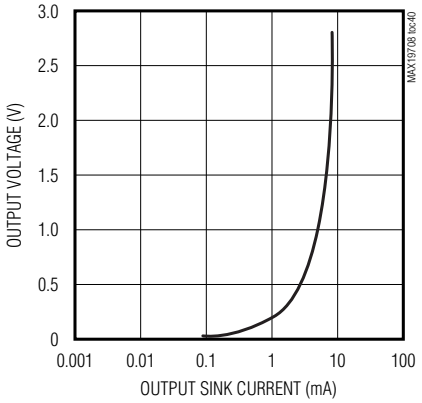

AUX-DAC SETTLING TIME

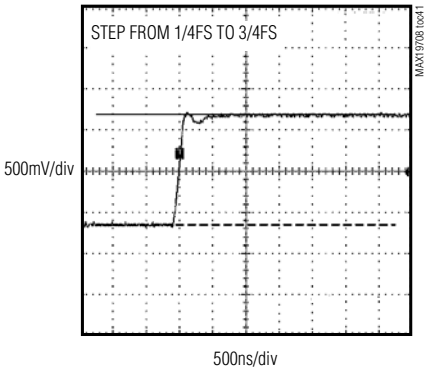

Pin Description

PIN	NAME	FUNCTION
1	REFP	Upper Reference Voltage. Bypass with a 0.33µF capacitor to GND as close to REFP as possible.
2, 8, 11, 31, 33, 39, 43	V_{DD}	Analog Supply Voltage. Bypass V_{DD} to GND with a combination of a 2.2µF capacitor in parallel with a 0.1µF capacitor.
3	IAP	Channel-IA Positive Analog Input. For single-ended operation, connect signal source to IAP.
4	IAN	Channel-IA Negative Analog Input. For single-ended operation, connect IAN to COM.
5, 7, 12, 32, 42	GND	Analog Ground. Connect all GND pins to ground plane.
6	CLK	Conversion Clock Input. Clock signal for both receive ADCs and transmit DACs.
9	QAN	Channel-QA Negative Analog Input. For single-ended operation, connect QAN to COM.

Pin Description (continued)

PIN	NAME	FUNCTION
10	QAP	Channel-QA Positive Analog Input. For single-ended operation, connect signal source to QAP.
13–18, 21–24	D0–D9	Digital I/O. Outputs for receive ADC in Rx mode. Inputs for transmit DAC in Tx mode. D9 is the most significant bit (MSB) and D0 is the least significant bit (LSB).
19	OGND	Output-Driver Ground
20	OV_{DD}	Output-Driver Power Supply. Supply range from +1.8V to V_{DD}. Bypass OV_{DD} to OGND with a combination of a 2.2µF capacitor in parallel with a 0.1µF capacitor.
25	$\overline{SHDN}$	Active-Low Shutdown Input. Apply logic-low to place the MAX19708 in shutdown.
26	DOUT	Aux-ADC Digital Output
27	$T/\overline{R}$	Transmit- or Receive-Mode Select Input. $T/\overline{R}$ logic-low input sets the device in receive mode. A logic-high input sets the device in transmit mode.
28	DIN	3-Wire Serial-Interface Data Input. Data is latched on the rising edge of the SCLK.
29	SCLK	3-Wire Serial-Interface Clock Input
30	$\overline{CS}$	3-Wire Serial-Interface Chip-Select Input. Logic-low enables the serial interface.
34	ADC2	Analog Input for Auxiliary ADC
35	ADC1	Analog Input for Auxiliary ADC
36	DAC3	Analog Output for Auxiliary DAC3
37	DAC2	Analog Output for Auxiliary DAC2
38	DAC1	Analog Output for Auxiliary DAC1 (AFC DAC, V_{OUT} = 1.1V During Power-Up)
40, 41	IDN, IDP	Tx Path Channel-ID Differential Voltage Output
44, 45	QDN, QDP	Tx Path Channel-QD Differential Voltage Output
46	REFIN	Reference Input. Connect to V_{DD} for internal reference.
47	COM	Common-Mode Voltage I/O. Bypass COM to GND with a 0.33µF capacitor.
48	REFN	Negative Reference I/O. Rx ADC conversion range is ±(V_{REFP} - V_{REFN}). Bypass REFN to GND with a 0.1µF capacitor.
—	EP	Exposed Paddle. Exposed paddle is internally connected to GND. Connect EP to the GND plane.

Detailed Description

The MAX19708 integrates a dual, 10-bit Rx ADC and a dual, 10-bit Tx DAC with TD-SCDMA baseband filters while providing ultra-low power and high dynamic performance at 11Msps conversion rate. The Rx ADC analog input amplifiers are fully differential and accept 1.024V_{P-P} full-scale signals. The Tx DAC analog outputs are fully differential with ±410mV or ±500mV full-scale output, selectable common-mode DC level, and adjustable I/Q offset trim.

The MAX19708 integrates three 12-bit auxiliary DAC (aux-DAC) channels and a 10-bit, 333ksps auxiliary ADC (aux-ADC) with 4:1 input multiplexer. The aux-DAC channels feature 1µs settling time for fast AGC, VGA, and AFC level setting. The aux-ADC features data averaging to reduce processor overhead and a selectable clock-divider to program the conversion rate.

The MAX19708 includes a 3-wire serial interface to control operating modes and power management. The serial interface is SPI™ and MICROWIRE™ compatible. The MAX19708 serial interface selects shutdown, idle, standby, transmit (Tx), and receive (Rx) modes, as well as controlling aux-DAC and aux-ADC channels.

The Rx ADC and Tx DAC share a common digital I/O to reduce the digital interface to a single 10-bit parallel multiplexed bus. The 10-bit digital bus operates on a single +1.8V to +3.3V supply.

SPI is a trademark of Motorola, Inc.
MICROWIRE is a trademark of National Semiconductor Corp.

10-Bit, 11Msps, Ultra-Low-Power Analog Front-End

Dual 10-Bit Rx ADC

The ADC uses a seven-stage, fully differential, pipelined architecture that allows for high-speed conversion while minimizing power consumption. Samples taken at the inputs move progressively through the pipeline stages every half clock cycle. Including the delay through the output latch, the total clock-cycle latency is 5 clock cycles for channel IA and 5.5 clock cycles for channel QA. The ADC full-scale analog input range is $\pm V_{REF}$ with a V_{DD} / 2 (±0.2V) common-mode input range. V_{REF} is the difference between V_{REFP} and V_{REFN}. See the *Reference Configurations* section for details.

Input Track-and-Hold (T/H) Circuits

Figure 1 displays a simplified diagram of the Rx ADC input track-and-hold (T/H) circuitry. Both ADC inputs (IAP, QAP, IAN, and QAN) can be driven either differentially or single-ended. Match the impedance of IAP and IAN, as well as QAP and QAN, and set the input signal common-mode voltage within the $V_{DD}/2$ (±200mV) Rx ADC range for optimum performance.

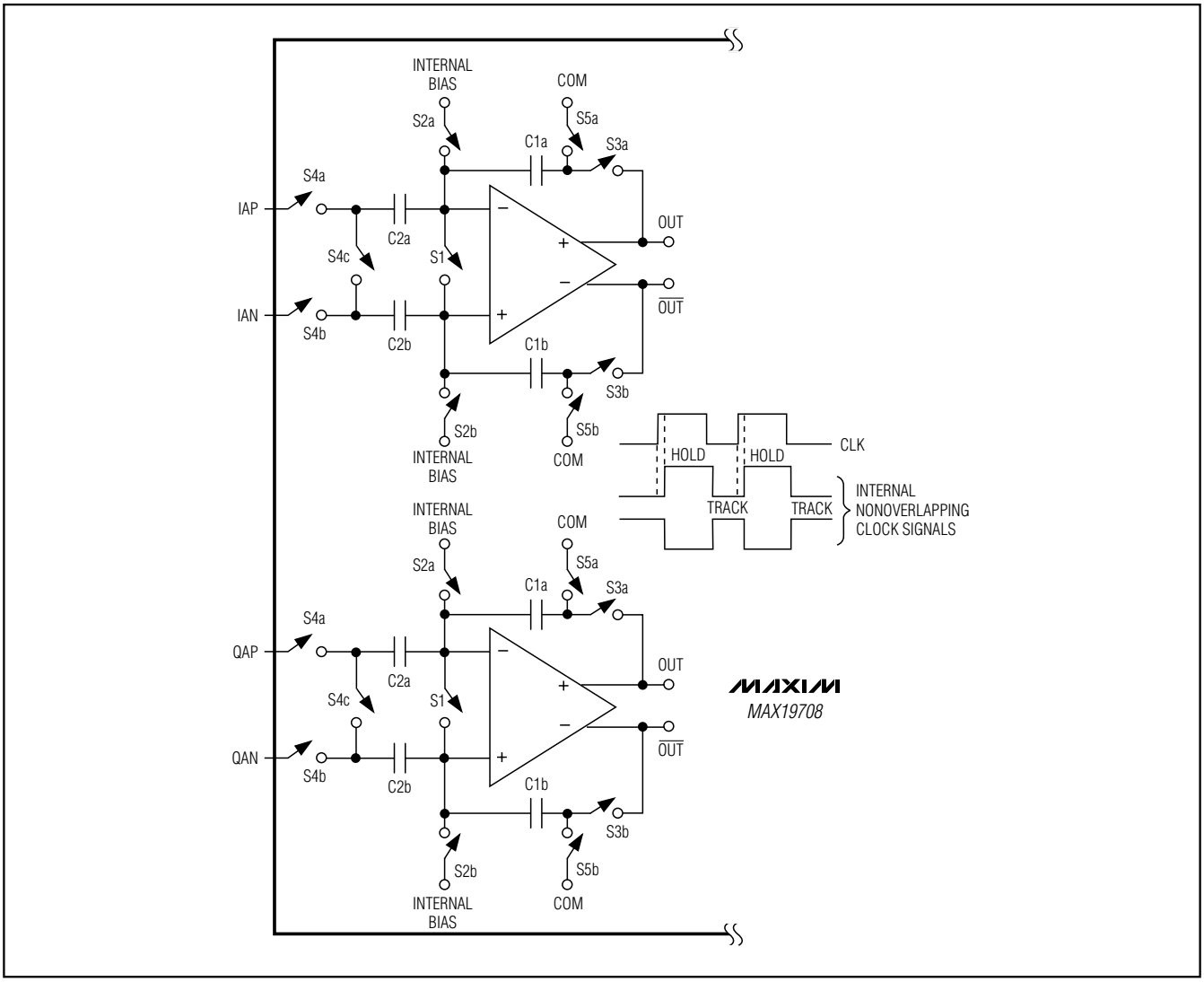

Figure 1. Rx ADC Internal T/H Circuits

Table 1. Rx ADC Output Codes vs. Input Voltage

DIFFERENTIAL INPUT VOLTAGE	DIFFERENTIAL INPUT (LSB)	OFFSET BINARY (D0–D9)	OUTPUT DECIMAL CODE
V_{REF} x 512/512	511 (+Full Scale - 1 LSB)	11 1111 1111	1023
V_{REF} x 511/512	510 (+Full Scale - 2 LSB)	11 1111 1110	1022
V_{REF} x 1/512	+1	10 0000 0001	513
V_{REF} x 0/512	0 (Bipolar Zero)	10 0000 0000	512
-V_{REF} x 1/512	-1	01 1111 1111	511
-V_{REF} x 511/512	-511 (-Full Scale +1 LSB)	00 0000 0001	1
-V_{REF} x 512/512	-512 (-Full Scale)	00 0000 0000	0

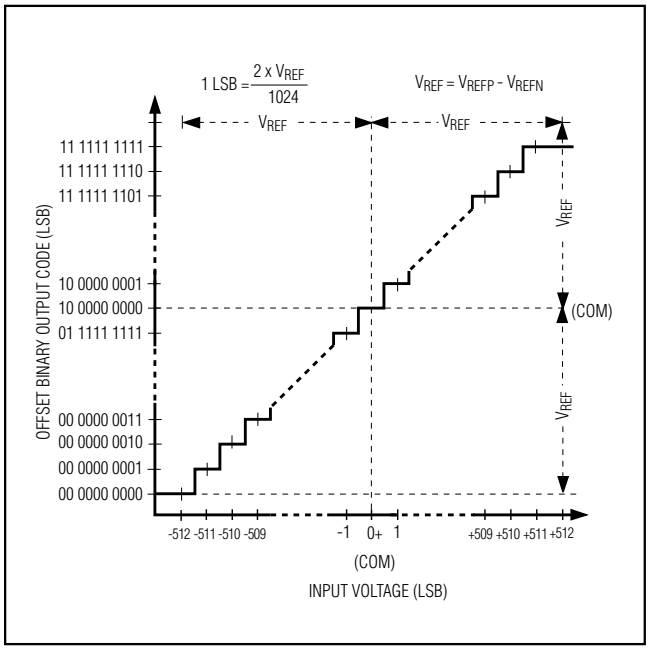

Figure 2. Rx ADC Transfer Function

Rx ADC System Timing Requirements

Figure 3 shows the relationship between the clock, analog inputs, and the resulting output data. Channel I (CHI) and channel Q (CHQ) are sampled on the rising edge of the clock signal (CLK) and the resulting data is multiplexed at the D0–D9 outputs. CHI data is updated on the rising edge and CHQ data is updated on the falling edge of the CLK. Including the delay through the output latch, the total clock-cycle latency is 5 clock cycles for CHI and 5.5 clock cycles for CHQ.

Digital Input/Output Data (D0–D9)

D0–D9 are the Rx ADC digital logic outputs when the MAX19708 is in receive mode. This bus is shared with the Tx DAC digital logic inputs and operates in half-duplex mode. D0–D9 are the Tx DAC digital logic inputs when the MAX19708 is in transmit mode. The logic level is set by OV_{DD} from 1.8V to V_{DD}. The digital output coding is offset binary (Table 1). Keep the capacitive load on the digital outputs D0–D9 as low as possible (< 15pF) to avoid large digital currents feeding back into the analog portion of the MAX19708 and degrading its dynamic performance. Buffers on the digital outputs isolate the outputs from heavy capacitive loads. Adding 100Ω resistors in series with the digital outputs close to the MAX19708 will help improve ADC performance. Refer to the MAX19708EVKIT schematic for an example of the digital outputs driving a digital buffer through 100Ω series resistors.

During SHDN, IDLE, and STBY states, D0–D9 are internally pulled up to prevent floating digital inputs. To ensure no current flows through D0–D9 I/O, the external bus needs to be either tri-stated or pulled up to OV_{DD} and should not be pulled to ground.

10-Bit, 11Msps, Ultra-Low-Power Analog Front-End

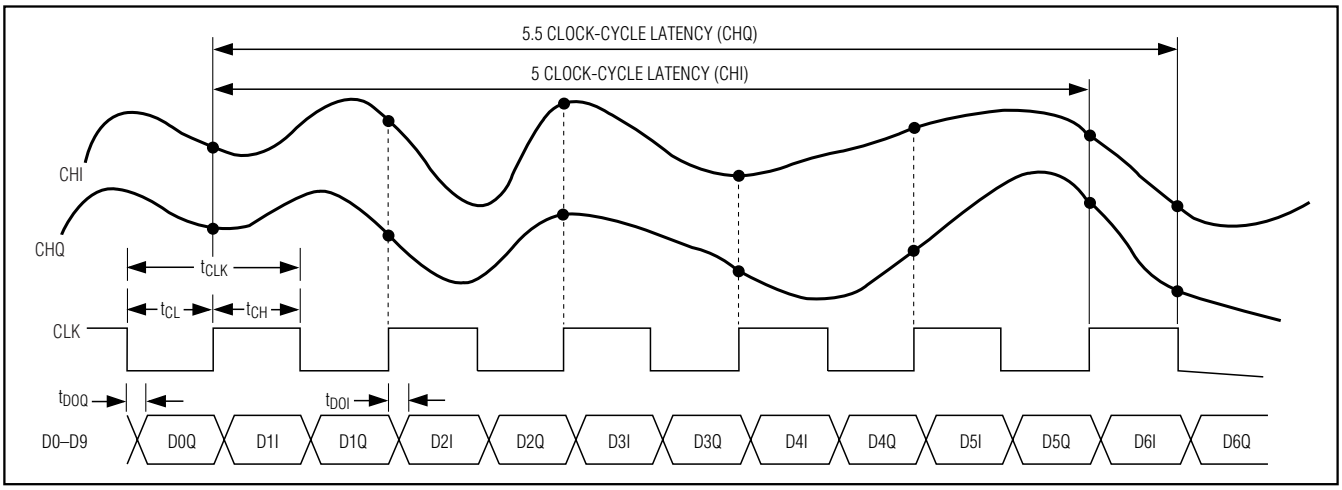

Figure 3. Rx ADC System Timing Diagram

Table 2. Tx Path Output Voltage vs. Input Codes

(Internal Reference Mode V_{REFDAC} = 1.024V, External Reference Mode V_{REFDAC} = V_{REFIN}; V_{FS} = 410 for 820mV_{P-P} Full Scale and V_{FS} = 500 for 1V_{P-P} Full Scale)

DIFFERENTIAL OUTPUT VOLTAGE (V)	OFFSET BINARY (D0–D9)	INPUT DECIMAL CODE
$(V_{FS})\frac{V_{REFDAC}}{1024} \times \frac{1023}{1023}$	11 1111 1111	1023
$(V_{FS})\frac{V_{REFDAC}}{1024} \times \frac{1021}{1023}$	11 1111 1110	1022
$(V_{FS})\frac{V_{REFDAC}}{1024} \times \frac{3}{1023}$	10 0000 0001	513
$(V_{FS})\frac{V_{REFDAC}}{1024} \times \frac{1}{1023}$	10 0000 0000	512
$(V_{FS})\frac{-V_{REFDAC}}{1024} \times \frac{1}{1023}$	01 1111 1111	511
$(V_{FS})\frac{-V_{REFDAC}}{1024} \times \frac{1021}{1023}$	00 0000 0001	1
$(V_{FS})\frac{-V_{REFDAC}}{1024} \times \frac{1023}{1023}$	00 0000 0000	0

Dual 10-Bit Tx DAC and Transmit Path

The dual 10-bit digital-to-analog converters (Tx DAC) operate with clock speeds up to 11MHz. The Tx DAC digital inputs, D0–D9, are multiplexed on a single 10-bit bus. The voltage reference determines the Tx path full-scale voltage at IDP, IDN and QDP, QDN analog outputs. See the *Reference Configurations* section for setting reference voltage. Each Tx path output channel integrates a lowpass filter tuned to meet the TD-SCDMA spectral mask requirements.

The TD-SCDMA filters are tuned for 1.32MHz cutoff frequency and > 55dB image rejection at f_{IMAGE} = 4.32MHz, f_{OUT} = 800kHz, and f_{CLK} = 5.12MHz. See Figure 4 for an illustration of the filter frequency response.

Buffer amplifiers follow the TD-SCDMA filters. The amplifier outputs (IDN, IDP, QDN, QDP) are biased at an adjustable common-mode DC level and designed to drive a differential input stage with ≥ 70kΩ input impedance. This simplifies the analog interface between RF

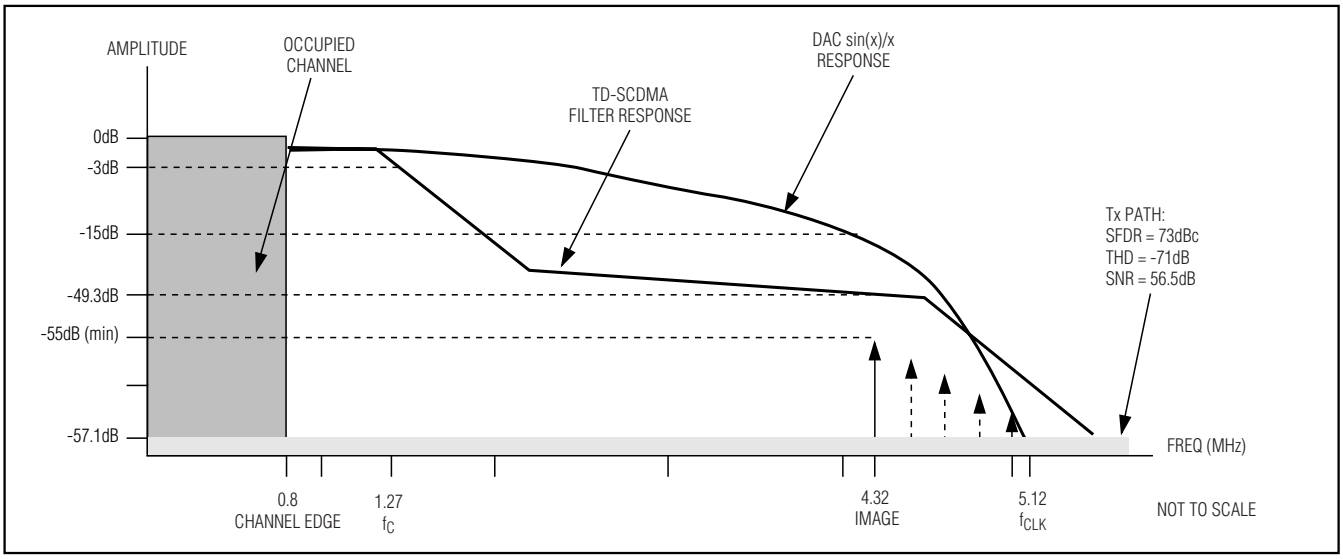

Figure 4. TD-SCDMA Filter Frequency Response

quadrature upconverters and the MAX19708. Many RF upconverters require a 0.9V to 1.4V common-mode bias. The MAX19708 common-mode DC bias eliminates discrete level-setting resistors and code-generated level shifting while preserving the full dynamic range of each Tx DAC. The Tx DAC differential analog outputs cannot be used in single-ended mode because of the internally generated common-mode DC level. Table 2 shows the Tx path output voltage vs. input codes. Table 11 shows the selection of DC common-mode levels. See Figure 5 for an illustration of the Tx DAC analog output levels.

The buffer amplifiers also feature a programmable full-scale output level of ±410mV or ±500mV and independent DC offset trim on each I/Q channel. Both features are configured through the SPI interface. The DC offset correction is used to optimize sideband and carrier suppression in the Tx signal path (see Tables 8 and 10).

Tx DAC Timing

Figure 6 shows the relationship between the clock, input data, and analog outputs. Data for the I channel (ID) is latched on the falling edge of the clock signal, and Q-channel (QD) data is latched on the rising edge of the clock signal. Both I and Q outputs are simultaneously updated on the next rising edge of the clock signal.

3-Wire Serial Interface and Operation Modes

The 3-wire serial interface controls the MAX19708 operation modes as well as the three 12-bit aux-DACs and the 10-bit aux-ADC. Upon power-up, program the MAX19708 to operate in the desired mode. Use the 3-wire serial interface to program the device for shutdown, idle, standby, Rx, Tx, aux-DAC controls, or aux-ADC conversion. A 16-bit data register sets the mode control as shown in Table 3. The 16-bit word is composed of A3–A0 control bits and D11–D0 data bits. Data is shifted in MSB first (D11) and LSB last (A0). Tables 4, 5, and 6 show the MAX19708 operating modes and SPI commands. The serial interface remains active in all modes.

SPI Register Description

Program the control bits, A3–A0, in the register as shown in Table 3 to select the operating mode. Modify A3–A0 bits to select from ENABLE-16, Aux-DAC1, Aux-DAC2, Aux-DAC3, IOFFSET, QOFFSET, Aux-ADC, ENABLE-8, and COMSEL modes. ENABLE-16 is the default operating mode. This mode allows for shutdown, idle, and standby states as well as switching between FAST, SLOW, Rx and Tx modes. Table 4 shows the MAX19708 power-management modes. Table 5 shows the T/$\overline{R}$ pin-controlled external Tx-Rx switching modes. Table 6 shows the SPI-controlled Tx-Rx switching modes.

10-Bit, 11Msps, Ultra-Low-Power Analog Front-End

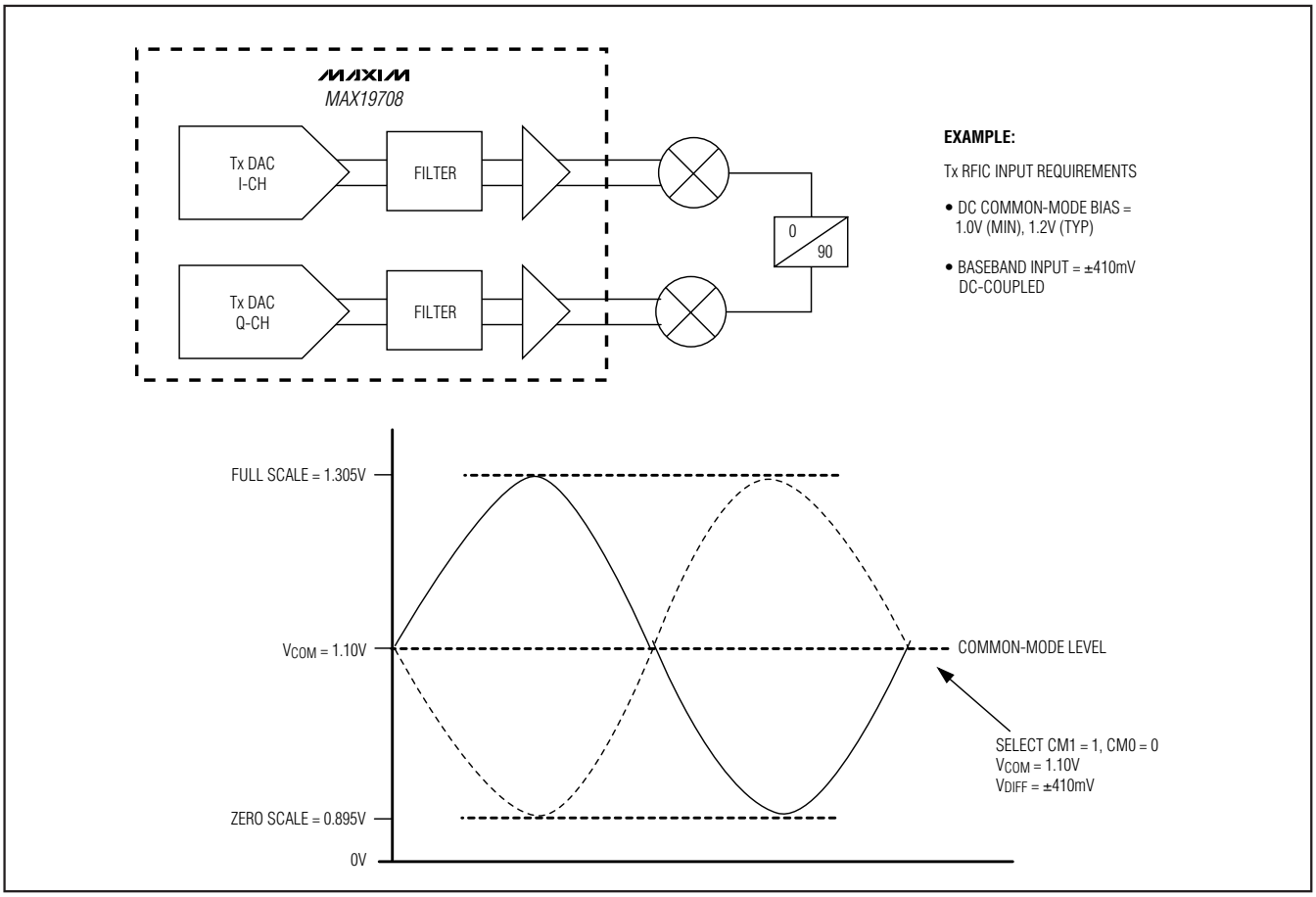

Figure 5. Tx DAC Common-Mode DC Level at IDN, IDP or QDN, QDP Differential Outputs

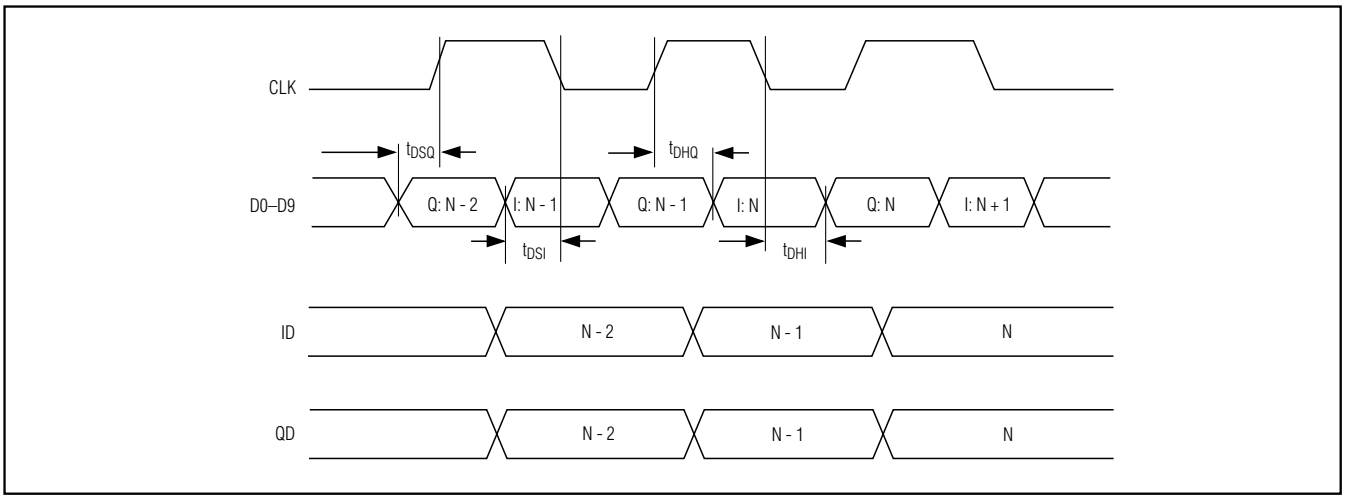

Figure 6. Tx DAC System Timing Diagram

Table 3. MAX19708 Mode Control

REGISTER NAME	D11	D10	D9	D8	D7	D6	D5	D4	D3	D2	D1	D0	A3	A2	A1	A0
	(MSB)	15	14	13	12	11	10	9	8	7	6	5	4	3	2	1 (LSB)
ENABLE-16	E11 = 0 Reserved	E10 = 0 Reserved	E9	—	E7	E6	E5	E4	E3	E2	E1	E0	0	0	0	0
Aux-DAC1	1D11	1D10	1D9	1D8	1D7	1D6	1D5	1D4	1D3	1D2	1D1	1D0	0	0	0	1
Aux-DAC2	2D11	2D10	2D9	2D8	2D7	2D6	2D5	2D4	2D3	2D2	2D1	2D0	0	0	1	0
Aux-DAC3	3D11	3D10	3D9	3D8	3D7	3D6	3D5	3D4	3D3	3D2	3D1	3D0	0	0	1	1
IOFFSET	—	—	—	—	—	—	IO5	IO4	IO3	IO2	IO1	IO0	0	1	0	0
QOFFSET	—	—	—	—	—	—	QO5	QO4	QO3	QO2	QO1	QO0	0	1	0	1
COMSEL	—	—	—	—	—	—	—	—	—	—	CM1	CM0	0	1	1	0
Aux-ADC	AD11 = 0 Reserved	AD10	AD9	AD8	AD7	AD6	AD5	AD4	AD3	AD2	AD1	AD0	0	1	1	1
ENABLE-8	—	—	—	—	—	—	—	—	E3	E2	E1	E0	1	0	0	0

— = Not used.

Table 4. Power-Management Modes

ADDRESS				DATA BITS					T/$\overline{R}$	MODE	FUNCTION (POWER MANAGEMENT)	DESCRIPTION	COMMENT
A3	A2	A1	A0	E9*	E3	E2	E1	E0	PIN 27				
0000 (16-Bit Mode) or 1000 (8-Bit Mode)				1X000					X	SHDN	SHUTDOWN	Rx ADC = OFF Tx DAC = OFF Aux-DAC = OFF Aux-ADC = OFF CLK = OFF REF = OFF	Device is in complete shutdown. Overrides T/$\overline{R}$ pin.
				XX001					X	IDLE	IDLE	Rx ADC = OFF Tx DAC = OFF Aux-DAC = Last State CLK = ON REF = ON	Fast turn-on time. Moderate idle power. Overrides T/$\overline{R}$ pin.
				1X010					X	STBY	STANDBY	Rx ADC = OFF Tx DAC = OFF Aux-DAC = Last State Aux-ADC = OFF CLK = OFF REF = ON	Slow turn-on time. Low standby power. Overrides T/$\overline{R}$ pin.

X = Don't care.
**Bit E9 is not available in 8-bit mode.*

10-Bit, 11Msps, Ultra-Low-Power Analog Front-End

Table 5. External Tx-Rx Control Using T/$\overline{R}$ Pin (T/$\overline{R}$ = 0 = Rx Mode, T/$\overline{R}$ = 1 = Tx Mode)

ADDRESS				DATA BITS				T/$\overline{R}$	STATE	FUNCTION Rx TO Tx-Tx TO Rx SWITCHING SPEED	DESCRIPTION	COMMENT
A3	A2	A1	A0	E3	E2	E1	E0	PIN 27				
0000 (16-Bit Mode) or 1000 (8-Bit Mode)				0011				0	Ext1-Rx	FAST-SLOW	Rx Mode: Rx ADC = ON Tx DAC = ON Rx Bus = Enable	Moderate Power: Fast Rx to Tx when T/$\overline{R}$ transitions 0 to 1.
								1	Ext1-Tx		Tx Mode: Rx ADC = OFF Tx DAC = ON Tx Bus = Enable	Low Power: Slow Tx to Rx when T/$\overline{R}$ transitions 1 to 0.
				0100				0	Ext2-Rx (Default)	SLOW-FAST	Rx Mode: Rx ADC = ON Tx DAC = OFF Rx Bus = Enable	Low Power: Slow Rx to Tx when T/$\overline{R}$ transitions 0 to 1.
								1	Ext2-Tx		Tx Mode: Rx ADC = ON Tx DAC = ON Tx Bus = Enable	Moderate Power: Fast Tx to Rx when T/$\overline{R}$ transitions 1 to 0.
				0101				0	Ext3-Rx	SLOW-SLOW	Rx Mode: Rx ADC = ON Tx DAC = OFF Rx Bus = Enable	Low Power: Slow Rx to Tx when T/$\overline{R}$ transitions 0 to 1.
								1	Ext3-Tx		Tx Mode: Rx ADC = OFF Tx DAC = ON Tx Bus = Enable	Low Power: Slow Tx to Rx when T/$\overline{R}$ transitions 1 to 0.
				0110				0	Ext4-Rx	FAST-FAST	Rx Mode: Rx ADC = ON Tx DAC = ON Rx Bus = Enable	Moderate Power: Fast Rx to Tx when T/$\overline{R}$ transitions 0 to 1.
								1	Ext4-Tx		Tx Mode: Rx ADC = ON Tx DAC = ON Tx Bus = Enable	Moderate Power: Fast Tx to Rx when T/$\overline{R}$ transitions 1 to 0.

In ENABLE-16 mode, the aux-DACs have independent control bits E4, E5, and E6, bit E7 sets the Tx path full-scale ouputs, and bit E9 enables the aux-ADC. Table 7 shows the auxiliary DAC enable codes. Table 8 shows the full-scale output selection. Table 9 shows the auxiliary ADC enable code. Bits E11 and E10 are reserved. Program bits E11 and E10 to logic-low.

Modes aux-DAC1, aux-DAC2, and aux-DAC3 select the aux-DAC channels named DAC1, DAC2, and DAC3 and hold the data inputs for each DAC. Bits _D11–_D0

Table 6. Tx-Rx Control Using SPI Commands

ADDRESS				DATA BITS				T/$\overline{R}$	MODE	FUNCTION (Tx-Rx SWITCHING SPEED)	DESCRIPTION	COMMENTS
A3	A2	A1	A0	E3	E2	E1	E0	PIN 27				
0000 (16-Bit Mode) or 1000 (8-Bit Mode)				1011				X	SPI1-Rx	SLOW	Rx Mode: Rx ADC = ON Tx DAC = OFF Rx Bus = Enable	Low Power: Slow Rx to Tx through SPI command.
				1100				X	SPI2-Tx	SLOW	Tx Mode: Rx ADC = OFF Tx DAC = ON Tx Bus = Enable	Low Power: Slow Tx to Rx through SPI command.
				1101				X	SPI3-Rx	FAST	Rx Mode: Rx ADC = ON Tx DAC = ON Rx Bus = Enabled	Moderate Power: Fast Rx to Tx through SPI command.
				1110				X	SPI4-Tx	FAST	Tx Mode: Rx ADC = ON Tx DAC = ON Tx Bus = Enabled	Moderate Power: Fast Tx to Rx through SPI command.

X = Don't care.

Table 7. Aux-DAC Enable Table (ENABLE-16 Mode)

E6	E5	E4	Aux-DAC3	Aux-DAC2	Aux-DAC1
0	0	0	ON	ON	ON
0	0	1	ON	ON	OFF
0	1	0	ON	OFF	ON
0	1	1	ON	OFF	OFF
1	0	0	OFF	ON	ON
1	0	1	OFF	ON	OFF
1	1	0	OFF	OFF	ON
1	1	1	OFF	OFF	OFF

Table 8. Tx Path Full-Scale Select (ENABLE-16 Mode)

E7	Tx-PATH OUTPUT FULL SCALE
0 (Default)	±410mV
1	±500mV

Table 9. Aux-ADC Enable Table (ENABLE-16 Mode)

E9	SELECTION
0 (Default)	Aux-ADC is Powered ON
1	Aux-ADC is Powered OFF

are the data inputs for each aux-DAC and can be programmed through SPI. The MAX19708 also includes two 6-bit registers that can be programmed to adjust the offsets for the Tx path I and Q channels independently (see Table 10). Use the COMSEL mode to select the output common-mode voltage with bits CM1 and CM0 (see Table 11). Use aux-ADC mode to start the auxiliary ADC conversion (see the *10-Bit, 333ksps Auxiliary ADC* section for details). Use ENABLE-8 mode for faster enable and switching between shutdown, idle, and standby states as well as switching between FAST, SLOW, Rx and Tx modes.

Shutdown mode offers the most dramatic power savings by shutting down all the analog sections of the MAX19708 and placing the Rx ADC digital outputs in

10-Bit, 11Msps, Ultra-Low-Power Analog Front-End

Table 10. Offset Control Bits for I and Q Channels (IOFFSET or QOFFSET Mode)

BITS IO5–IO0 WHEN IN IOFFSET MODE, BITS QO5–QO0 WHEN IN QOFFSET MODE						OFFSET 1 LSB = (VFS_{P-P} / 1023)
IO5/QO5	IO4/QO4	IO3/QO3	IO2/QO2	IO1/QO1	IO0/QO0	
1	1	1	1	1	1	-31 LSB
1	1	1	1	1	0	-30 LSB
1	1	1	1	0	1	-29 LSB
• • •	• • •	• • •	• • •	• • •	• • •	• • •
1	0	0	0	1	0	-2 LSB
1	0	0	0	0	1	-1 LSB
1	0	0	0	0	0	0mV
0	0	0	0	0	0	0mV (Default)
0	0	0	0	0	1	1 LSB
0	0	0	0	1	0	2 LSB
• • •	• • •	• • •	• • •	• • •	• • •	• • •
0	1	1	1	0	1	29 LSB
0	1	1	1	1	0	30 LSB
0	1	1	1	1	1	31 LSB

Note: *For transmit full-scale select of ±410mV: 1 LSB = (820mV$_{P-P}$ / 1023) = 0.8016mV. For transmit full scale select of ±500mV: 1 LSB = (1V$_{P-P}$ / 1023) = 0.9775mV.*

Table 11. Common-Mode Select (COMSEL Mode)

CM1	CM0	Tx PATH OUTPUT COMMON MODE (V)
0	0	1.40 (Default)
0	1	1.25
1	0	1.10
1	1	0.90

tri-state mode. When the Rx ADC outputs transition from tri-state to ON, the last converted word is placed on the digital outputs. The Tx DAC previously stored data is lost when coming out of shutdown mode. The wake-up time from shutdown mode is dominated by the time required to charge the capacitors at REFP, REFN, and COM. In internal reference mode and buffered external reference mode, the wake-up time is typically 82.2µs to enter Rx mode and 29µs to enter Tx mode.

In idle mode, the reference and clock distribution circuits are powered, but all other functions are off. The Rx ADC outputs are forced to tri-state. The wake-up time is 9.6µs to enter Rx mode and 7.6µs to enter Tx mode. When the Rx ADC outputs transition from tri-state to ON, the last converted word is placed on the digital outputs.

In standby mode, the reference is powered, but the rest of the device functions are off. The wake-up time from standby mode is 17.5µs to enter Rx mode and 24µs to enter Tx mode. When the Rx ADC outputs transition from tri-state to active, the last converted word is placed on the digital outputs.

FAST and SLOW Rx and Tx Modes

In addition to the external Tx-Rx control, the MAX19708 also features SLOW and FAST modes for switching between Rx and Tx operation. In FAST Tx mode, the Rx ADC core is powered on but the ADC core digital outputs are tri-stated on the D0–D9 bus; likewise, in FAST Rx mode, the transmit path (DAC core and Tx filter) is powered on but the DAC core digital inputs are tri-stated on the D0–D9 bus. The switching time between Tx to Rx or Rx to Tx is FAST because the converters are on and do not have to recover from a power-down state. In FAST mode, the switching time between Rx to Tx and Tx to Rx is 0.5µs. However, power consumption is higher

in this mode because both the Tx and Rx cores are always on. To prevent bus contention in these states, the Rx ADC output buffers are tri-stated during Tx and the Tx DAC input bus is tri-stated during Rx.

In SLOW mode, the Rx ADC core is off during Tx; likewise the Tx DAC and filters are turned off during Rx to yield lower power consumption in these modes. For example, the power in SLOW Tx mode is 35.1mW. The power consumption during Rx is 24mW compared to 41.1mW power consumption in FAST mode. However, the recovery time between states is increased. The switching time in SLOW mode between Rx to Tx is 7µs and Tx to Rx is 8.1µs.

External T/$\overline{R}$ Switching Control vs. Serial-Interface Control

Bit E3 in the ENABLE-16 or ENABLE-8 register determines whether the device Tx-Rx mode is controlled externally through the T/$\overline{R}$ input (E3 = low) or through the SPI command (E3 = high). By default, the MAX19708 is in the external Tx-Rx control mode. In the external control mode, use the T/$\overline{R}$ input (pin 27) to switch between Rx and Tx modes. Using the T/$\overline{R}$ pin provides faster switching between Rx and Tx modes. To override the external Tx-Rx control, program the MAX19708 through the serial interface. During SHDN, IDLE, or STBY modes, the T/$\overline{R}$ input is overridden. To restore external Tx-Rx control, program bit E3 low and exit the SHDN, IDLE, or STBY modes through the serial interface.

SPI Timing

The serial digital interface is a standard 3-wire connection ($\overline{CS}$, SCLK, DIN) compatible with SPI/QSPI™/MICROWIRE/DSP interfaces. Set $\overline{CS}$ low to enable the serial data loading at DIN or output at DOUT. Following a $\overline{CS}$ high-to-low transition, data is shifted synchronously, most significant bit first, on the rising edge of the serial clock (SCLK). After 16 bits are loaded into the serial input register, data is transferred to the latch when $\overline{CS}$ transitions high. $\overline{CS}$ must transition high for a minimum of 80ns before the next write sequence. The SCLK can idle either high or low between transitions. Figure 7 shows the detailed timing diagram of the 3-wire serial interface.

QSPI is a trademark of Motorola, Inc.

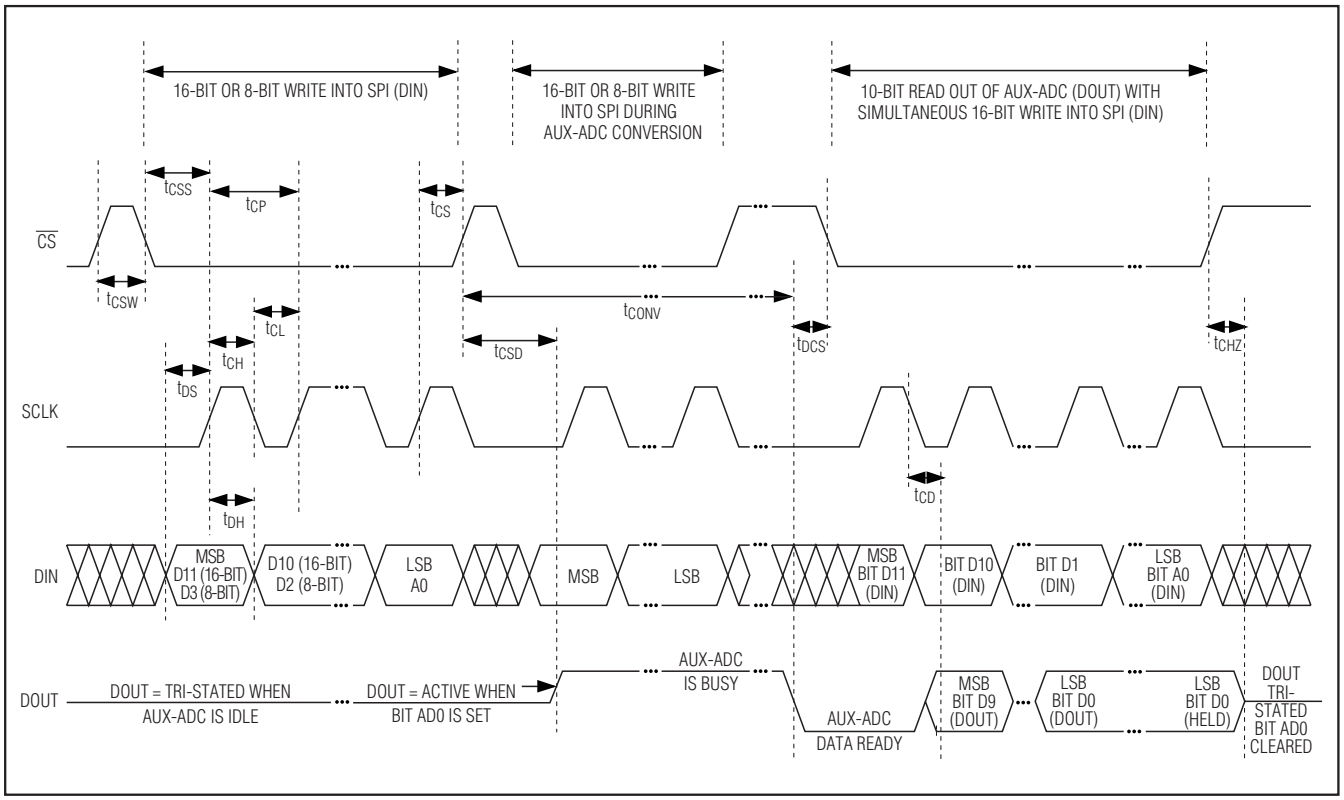

Figure 7. Serial-Interface Timing Diagram

10-Bit, 11Msps, Ultra-Low-Power Analog Front-End

Mode-Recovery Timing

Figure 8 shows the mode-recovery timing diagram. t_{WAKE} is the wakeup time when exiting shutdown, idle, or standby mode and entering Rx or Tx mode. t_{ENABLE} is the recovery time when switching between either Rx or Tx mode. t_{WAKE} or t_{ENABLE} is the time for the Rx ADC to settle within 1dB of specified SINAD performance and Tx DAC settling to 10 LSB error. t_{WAKE} and t_{ENABLE} times are measured after either the 16-bit serial command is latched into the MAX19708 by a $\overline{CS}$ transition high (SPI controlled) or a $T/\overline{R}$ logic transition (external Tx-Rx control). In FAST mode, the recovery time is 0.5µs to switch between Tx or Rx modes.

System Clock Input (CLK)

Both the Rx ADC and Tx DAC share the CLK input. The CLK input accepts a CMOS-compatible signal level set by OV_{DD} from 1.8V to V_{DD}. Since the interstage conversion of the device depends on the repeatability of the rising and falling edges of the external clock, use a clock with low jitter and fast rise and fall times (< 2ns). Specifically, sampling occurs on the rising edge of the clock signal, requiring this edge to provide the lowest possible jitter. Any significant clock jitter limits the SNR performance of the on-chip Rx ADC as follows:

$$SNR = 20 \times \log\left(\frac{1}{2 \times \pi \times f_{IN} \times t_{AJ}}\right)$$

where f_{IN} represents the analog input frequency and t_{AJ} is the time of the clock jitter.

Clock jitter is especially critical for undersampling applications. Consider the clock input as an analog input and route away from any analog input or other digital signal lines. The MAX19708 clock input operates with an OV_{DD} / 2 voltage threshold and accepts a 50% ±15% duty cycle.

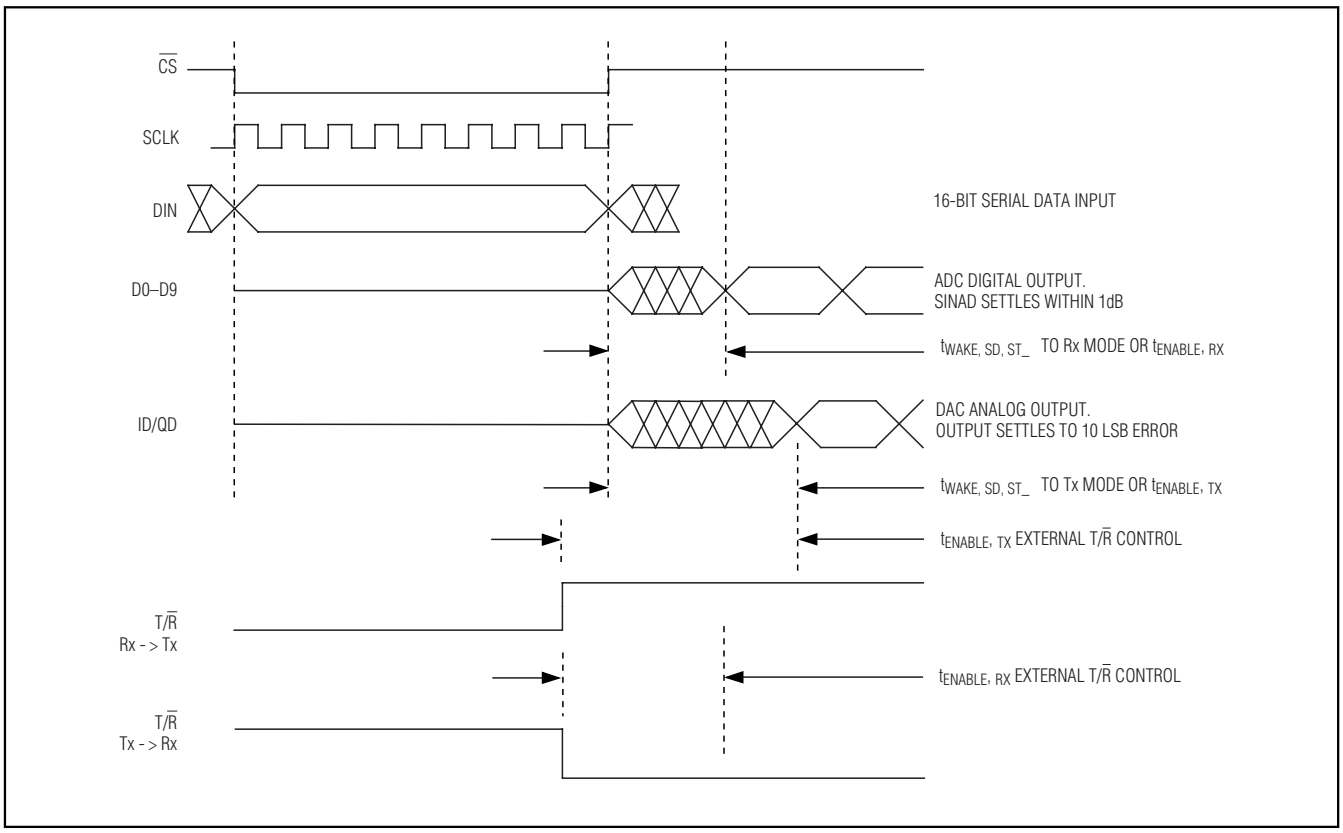

Figure 8. Mode-Recovery Timing Diagram

12-Bit, Auxiliary Control DACs

The MAX19708 includes three 12-bit aux-DACs (DAC1, DAC2, DAC3) with 1µs settling time for controlling variable-gain amplifier (VGA), automatic gain-control (AGC), and automatic frequency-control (AFC) functions. The aux-DAC output range is 0.1V to 2.56V. During power-up, the VGA and AGC outputs (DAC2 and DAC3) are at zero. The AFC DAC (DAC1) is at 1.1V during power-up. The aux-DACs can be independently controlled through the SPI bus, except during SHDN mode where the aux-DACs are turned off completely and the output voltage is set to zero. In STBY and IDLE modes the aux-DACs maintain the last value. On wakeup from SHDN, the aux-DACs resume the last values.

Loading on the aux-DAC outputs should be carefully observed to achieve specified settling time and stability. The capacitive load must be kept to a maximum of 5pF including package and trace capacitance. The resistive load must be greater than 200kΩ. If capacitive loading exceeds 5pF, then add a 10kΩ resistor in series with the output. Adding the series resistor helps drive larger load capacitance (< 15pF) at the expense of slower settling time.

10-Bit, 333ksps Auxiliary ADC

The MAX19708 integrates a 333ksps, 10-bit aux-ADC with an input 4:1 multiplexer. In the aux-ADC mode register, setting bit AD0 begins a conversion with the auxiliary ADC. Bit AD0 automatically clears when the conversion is complete. Setting or clearing AD0 during a conversion has no effect (see Table 12). Bit AD1 determines the internal reference of the auxiliary ADC (see Table 13). Bits AD2 and AD3 determine the auxiliary ADC input source (see Table 14). Bits AD4, AD5, and AD6 select the number of averages taken when a single start-convert command is given. The conversion time increases as the number of averages increases (see Table 15). The conversion clock can be divided down from the system clock by properly setting bits AD7, AD8, and AD9 (see Table 16). The aux-ADC output data can be written out of DOUT by setting bit AD10 high (see Table 17).

The aux-ADC features a 4:1 input multiplexer to allow measurements on four input sources. The input sources are selected by AD3 and AD2 (see Table 14). Two of the multiplexer inputs (ADC1 and ADC2) can be connected to external sources such as an RF power detector like the MAX2208 or temperature sensor like the MAX6613. The other two multiplexer inputs are internal connections to V_{DD} and OV_{DD} that monitor the power-supply voltages. The internal V_{DD} and OV_{DD} connections are made through integrated resistor-dividers that yield V_{DD} / 2 and OV_{DD} / 2 measurement results. The aux-ADC voltage reference can be selected between an internal 2.048V bandgap reference or V_{DD} (see Table 13). The V_{DD} reference selection is provided to allow measurement of an external voltage source with a full-scale range extending beyond the 2.048V level. The input source voltage range cannot extend above V_{DD}.

Table 12. Auxiliary ADC Convert

AD0	SELECTION
0	Aux-ADC Idle (Default)
1	Aux-ADC Start-Convert

Table 13. Auxiliary ADC Reference

AD1	SELECTION
0	Internal 2.048V Reference (Default)
1	Internal V_{DD} Reference

Table 14. Auxiliary ADC Input Source

AD3	AD2	AUX-ADC INPUT SOURCE
0	0	ADC1 (Default)
0	1	ADC2
1	0	V_{DD} / 2
1	1	OV_{DD} / 2

10-Bit, 11Msps, Ultra-Low-Power Analog Front-End

The conversion requires 12 clock edges (1 for input sampling, 1 for each of the 10 bits, and 1 at the end for loading into the serial output register) to complete one conversion cycle (when no averaging is being done). Each conversion of an average (when averaging is set greater than 1) requires 12 clock edges. The conversion clock is generated from the system clock input (CLK). An SPI-programmable divider divides the system clock by the appropriate divisor (set with bits AD7, AD8, and AD9; see Table 16) and provides the conversion clock to the auxiliary ADC. The auxiliary ADC has a maximum conversion rate of 333ksps. The maximum conversion clock frequency is 4MHz (333ksps x 12 clocks). Choose the proper divider value to keep the conversion clock frequency under 4MHz, based upon the system CLK frequency supplied to the MAX19708 (see Table 16). The total conversion time (t_{CONV}) of the auxiliary ADC can be calculated as $t_{CONV} = (12 \times N_{AVG} \times N_{DIV}) / f_{CLK}$; where N_{AVG} is the number of averages (see Table 15), N_{DIV} is the CLK divisor (see Table 16), and f_{CLK} is the system CLK frequency.

DOUT is normally in a tri-state condition. Upon setting the auxiliary ADC start conversion bit (bit AD0), DOUT becomes active and goes high, indicating that the aux-ADC is busy. When the conversion cycle is complete (including averaging), the data is placed into an output register and DOUT goes low, indicating that the output data is ready to be driven onto DOUT. When bit AD10 is set (AD10 = 1), the aux-ADC enters a data output mode where data is available on DOUT upon the next assertion low of $\overline{CS}$. The auxiliary ADC data is shifted out of DOUT (MSB first) with the data transitioning on the falling edge of the serial clock (SCLK). DOUT enters a tri-state condition when $\overline{CS}$ is deasserted high. When bit AD10 is cleared (AD10 = 0), the aux-ADC data is not available on DOUT (see Table 17).

DIN can be written independent of DOUT state. A 16-bit instruction at DIN updates the device configuration. To prevent modifying internal registers while reading data from DOUT, hold DIN at a high state. This effectively writes all ones into address 1111. Since address 1111 does not exist, no internal registers are affected.

Table 15. Auxiliary ADC Averaging

AD6	AD5	AD4	AUX-ADC AVERAGING
0	0	0	1 Conversion (No Averaging) (Default)
0	0	1	Average of 2 Conversions
0	1	0	Average of 4 Conversions
0	1	1	Average of 8 Conversions
1	0	0	Average of 16 Conversions
1	0	1	Average of 32 Conversions
1	1	X	Average of 32 Conversions

X = Don't care.

Table 16. Auxiliary ADC Clock (CLK) Divider

AD9	AD8	AD7	AUX-ADC CONVERSION CLOCK
0	0	0	CLK Divided by 1 (Default)
0	0	1	CLK Divided by 2
0	1	0	CLK Divided by 4
0	1	1	CLK Divided by 8
1	0	0	CLK Divided by 16
1	0	1	CLK Divided by 32
1	1	0	CLK Divided by 64
1	1	1	CLK Divided by 128

Table 17. Auxiliary ADC Data Output Mode

AD10	SELECTION
0	Aux-ADC Data is Not Available on DOUT (Default)
1	Aux-ADC Enters Data Output Mode Where Data is Available on DOUT

Table 18. Reference Modes

V_{REFIN}	REFERENCE MODE
> 0.8V x V_{DD}	Internal Reference Mode. V_{REF} is internally generated to be 0.512V. Bypass REFP, REFN, and COM each with a 0.33µF capacitor.
1.024V ±10%	Buffered External Reference Mode. An external 1.024V ±10% reference voltage is applied to REFIN. V_{REF} is internally generated to be V_{REFIN} / 2. Bypass REFP, REFN, and COM each with a 0.33µF capacitor. Bypass REFIN to GND with a 0.1µF capacitor.

Reference Configurations

The MAX19708 features an internal precision 1.024V bandgap reference that is stable over the entire power-supply and temperature ranges. The REFIN input provides two modes of reference operation. The voltage at REFIN (V_{REFIN}) sets the reference operation mode (Table 18).

In internal reference mode, connect REFIN to V_{DD}. V_{REF} is an internally generated 0.512V ±4%. COM, REFP, and REFN are low-impedance outputs with V_{COM} = V_{DD} / 2, V_{REFP} = V_{DD} / 2 + V_{REF} / 2, and V_{REFN} = V_{DD} / 2 - V_{REF} / 2. Bypass REFP, REFN, and COM each with a 0.33µF capacitor. Bypass REFIN to GND with a 0.1µF capacitor.

In buffered external reference mode, apply 1.024V ±10% at REFIN. In this mode, COM, REFP, and REFN are low-impedance outputs with V_{COM} = V_{DD} / 2, V_{REFP} = V_{DD} / 2 + V_{REFIN} / 4, and V_{REFN} = V_{DD} / 2 - V_{REFIN} / 4. Bypass REFP, REFN, and COM each with a 0.33µF capacitor. Bypass REFIN to GND with a 0.1µF capacitor. In this mode, the Tx path full-scale output is proportional to the external reference. For example, if the V_{REFIN} is increased by 10% (max), the Tx path full-scale output is also increased by 10% or ±451mV.

Applications Information

Using Balun Transformer AC-Coupling

An RF transformer (Figure 9) provides an excellent solution to convert a single-ended signal source to a fully differential signal for optimum ADC performance. Connecting the center tap of the transformer to COM provides a V_{DD} / 2 DC level shift to the input. A 1:1 transformer can be used, or a step-up transformer can be selected to reduce the drive requirements. In general, the MAX19708 provides better SFDR and THD with fully differential input signals than single-ended signals, especially for high input frequencies. In differential mode, even-order harmonics are lower as both inputs (IAP, IAN, QAP, QAN) are balanced, and each of the Rx ADC inputs only requires half the signal swing compared to single-ended mode. Figure 10 shows an RF transformer converting the MAX19708 Tx DAC differential analog outputs to single-ended.

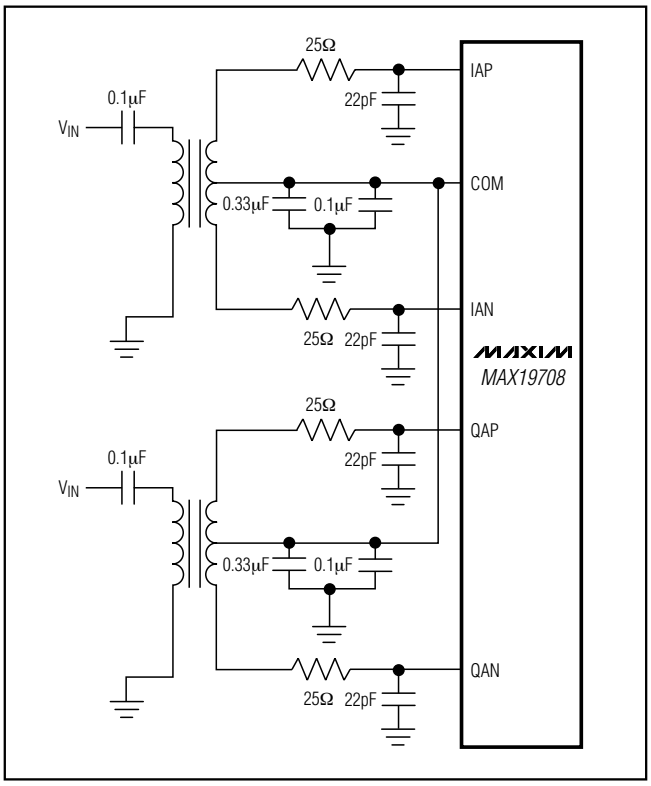

Figure 9. Balun Transformer-Coupled Single-Ended-to-Differential Input Drive for Rx ADC

Using Op-Amp Coupling

Drive the MAX19708 Rx ADC with op amps when a balun transformer is not available. Figures 11 and 12 show the Rx ADC being driven by op amps for AC-coupled single-ended and DC-coupled differential applications. Amplifiers such as the MAX4454 and MAX4354 provide high speed, high bandwidth, low noise, and

10-Bit, 11Msps, Ultra-Low-Power Analog Front-End

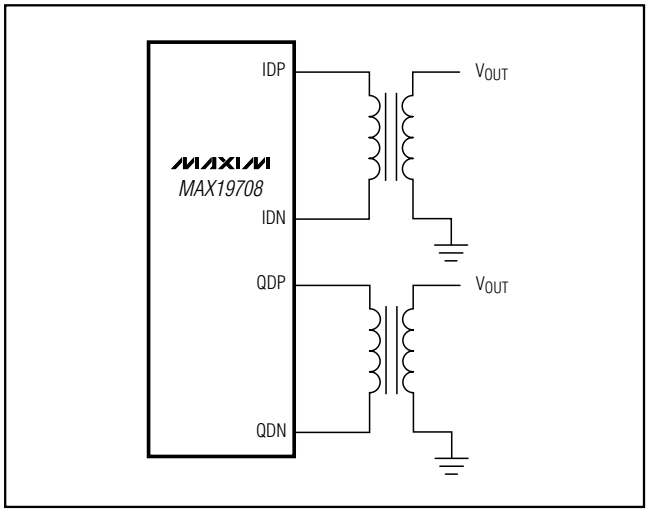

Figure 10. Balun Transformer-Coupled Differential-to-Single-Ended Output Drive for Tx DAC

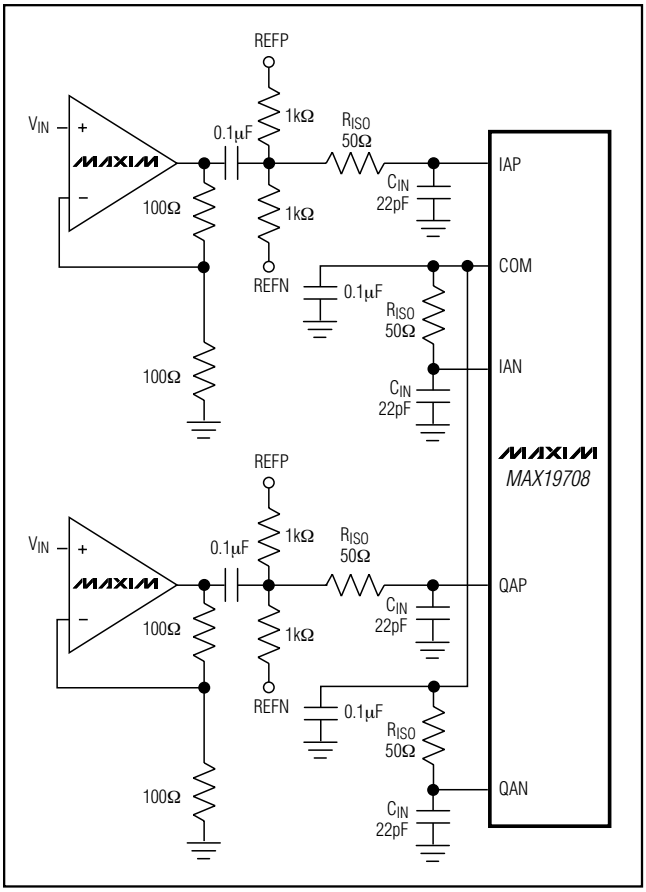

Figure 11. Single-Ended Drive for Rx ADC

low distortion to maintain the input signal integrity. The op-amp circuit shown in Figure 12 can also be used to interface with the Tx DAC differential analog outputs to provide gain or buffering. The Tx DAC differential analog outputs cannot be used in single-ended mode because of the internally generated common-mode level. Also, the Tx DAC analog outputs are designed to drive a differential input stage with input impedance ≥ 70kΩ. If single-ended outputs are desired, use an amplifier to provide differential-to-single-ended conversion and select an amplifier with proper input common-mode voltage range.

TDD Mode

The MAX19708 is optimized to operate in TD-SCDMA applications. When FAST mode is selected, the MAX19708 can switch between Tx and Rx modes through the T/$\overline{R}$ pin in typically 0.5µs. The Rx ADC and Tx DAC operate independently. The Rx ADC and Tx DAC digital bus are shared forming a single 10-bit parallel bus. Using the 3-wire serial interface or external T/$\overline{R}$ pin, select between Rx mode to enable the Rx ADC or Tx mode to enable the Tx DAC. When operating in Rx mode, the Tx DAC bus is not enabled and in Tx mode the Rx ADC bus is tri-stated, eliminating any unwanted spurious emissions and preventing bus contention. In TDD mode, the MAX19708 uses 41.1mW power in Rx mode at f_{CLK} = 11MHz and the DAC uses 42.3mW in Tx mode.

TD-SCDMA Application

Figure 13 illustrates a typical TD-SCDMA application circuit. The MAX19708 is designed to interface directly with the MAX2507 and MAX2392 radio front-ends to provide a complete “RF-to-Bits” front-end solution. The MAX19708 provides several features that allow direct interface to the MAX2392 and MAX2507:

- Integrated Tx filters reduce component count, lower cost, and meet TD-SCDMA spectral mask requirements
- Programmable DC common-mode Tx output levels eliminate discrete DC-level-shifting components while preserving Tx DAC full dynamic range
- Optimized Tx full-scale output level eliminates discrete amplifiers for I/Q gain control
- Tx-I/Q offset correction eliminates discrete trim DACs for offset trim to improve sideband/carrier suppression
- One microsecond settling time aux-DACs for VGA and AGC control allow fast, accurate Tx power and Rx gain control

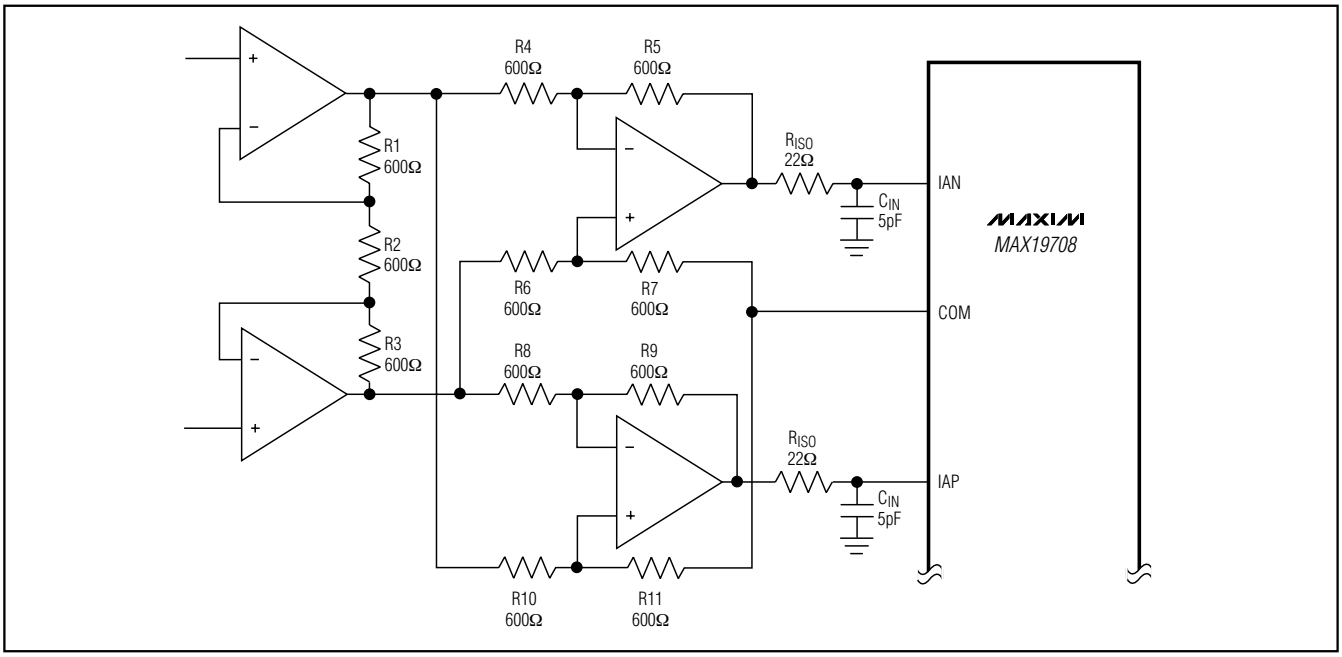

Figure 12. Rx ADC DC-Coupled Differential Drive

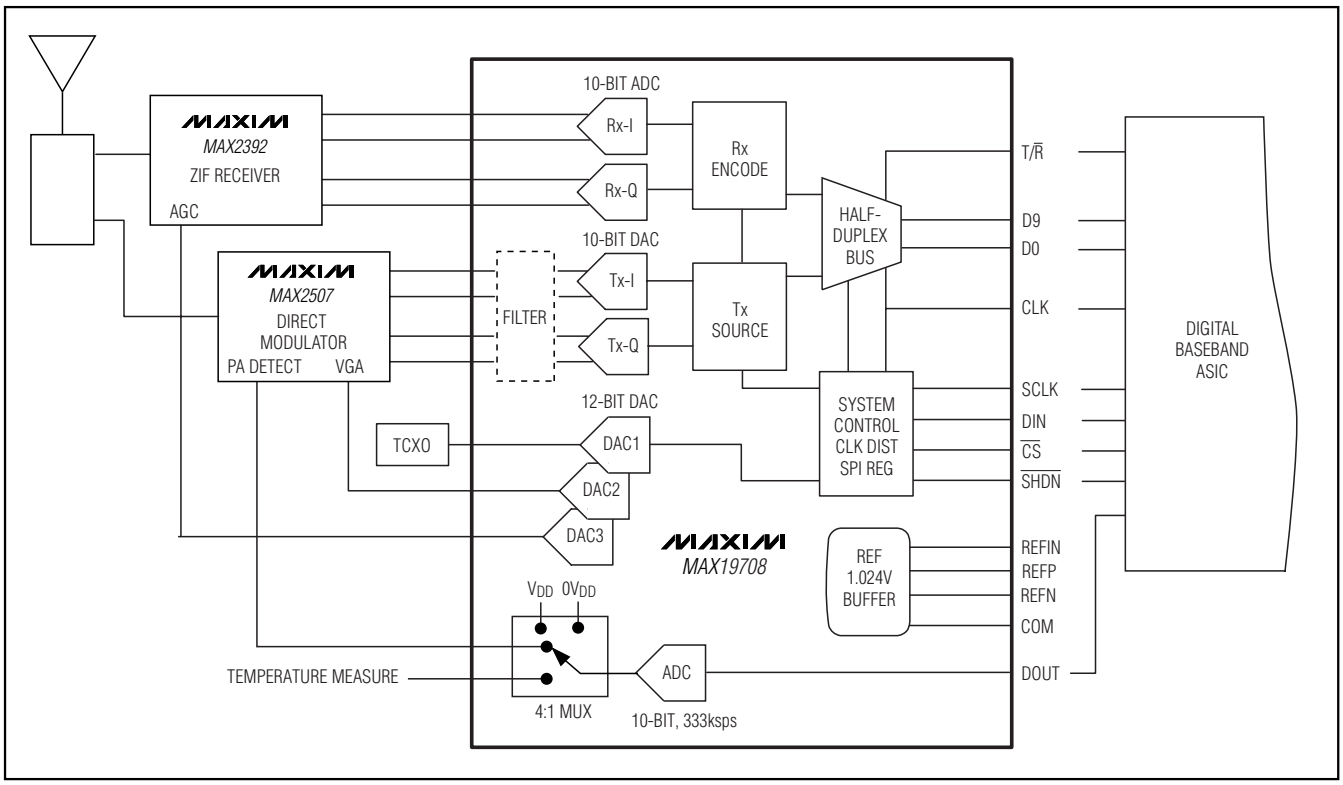

Figure 13. Typical Application Circuit for TD-SCDMA Radio

10-Bit, 11Msps, Ultra-Low-Power Analog Front-End

Grounding, Bypassing, and Board Layout

The MAX19708 requires high-speed board layout design techniques. Refer to the MAX19708 EV kit data sheet for a board layout reference. Place all bypass capacitors as close to the device as possible, preferably on the same side of the board as the device, using surface-mount devices for minimum inductance. Bypass V_{DD} to GND with a 0.1µF ceramic capacitor in parallel with a 2.2µF capacitor. Bypass OV_{DD} to OGND with a 0.1µF ceramic capacitor in parallel with a 2.2µF capacitor. Bypass REFP, REFN, and COM each to GND with a 0.33µF ceramic capacitor. Bypass REFIN to GND with a 0.1µF capacitor.

Multilayer boards with separated ground and power planes yield the highest level of signal integrity. Use a split ground plane arranged to match the physical location of the analog ground (GND) and the digital output-driver ground (OGND) on the device package. Connect the MAX19708 exposed backside paddle to GND plane. Join the two ground planes at a single point so the noisy digital ground currents do not interfere with the analog ground plane. The ideal location for this connection can be determined experimentally at a point along the gap between the two ground planes. Make this connection with a low-value, surface-mount resistor (1Ω to 5Ω), a ferrite bead, or a direct short. Alternatively, all ground pins could share the same ground plane, if the ground plane is sufficiently isolated from any noisy digital system's ground plane (e.g., downstream output buffer or DSP ground plane).

Route high-speed digital signal traces away from sensitive analog traces. Make sure to isolate the analog input lines to each respective converter to minimize channel-to-channel crosstalk. Keep all signal lines short and free of 90° turns.

Dynamic Parameter Definitions

ADC and DAC Static Parameter Definitions

Integral Nonlinearity (INL)

Integral nonlinearity is the deviation of the values on an actual transfer function from a straight line. This straight line can be either a best-straight-line fit or a line drawn between the end points of the transfer function, once offset and gain errors have been nullified. The static linearity parameters for the device are measured using the best-straight-line fit (DAC Figure 14a).

Differential Nonlinearity (DNL)

Differential nonlinearity is the difference between an actual step width and the ideal value of 1 LSB. A DNL error specification of less than 1 LSB guarantees no missing codes (ADC) and a monotonic transfer function (ADC and DAC) (DAC Figure 14b).

ADC Offset Error

Ideally, the midscale transition occurs at 0.5 LSB above midscale. The offset error is the amount of deviation between the measured transition point and the ideal transition point.

DAC Offset Error

Offset error (Figure 14a) is the difference between the ideal and actual offset point. The offset point is the output value when the digital input is midscale. This error affects all codes by the same amount and usually can be compensated by trimming.

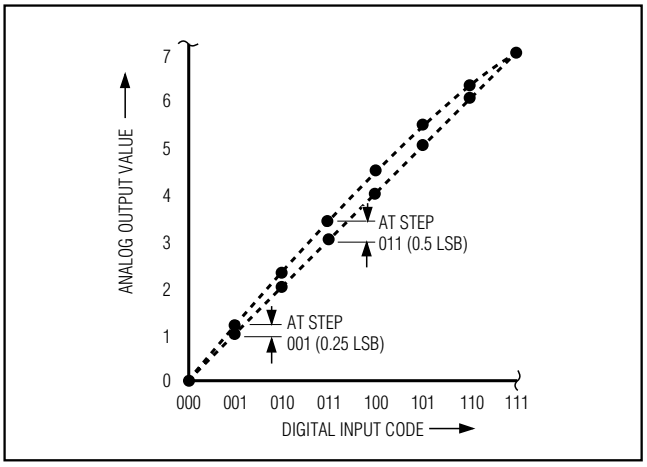

Figure 14a. Integral Nonlinearity

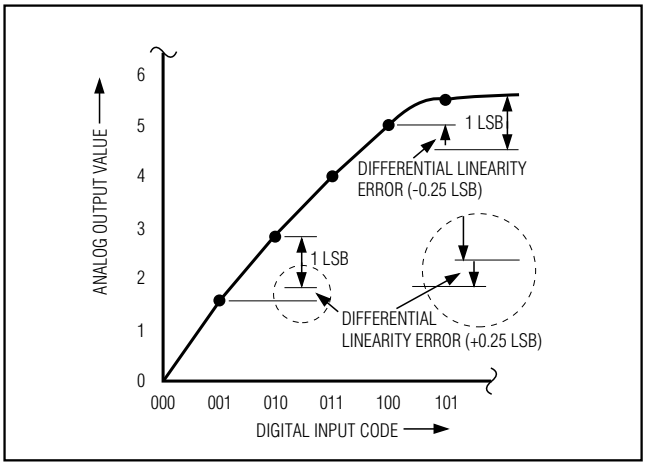

Figure 14b. Differential Nonlinearity

ADC Gain Error

Ideally, the ADC full-scale transition occurs at 1.5 LSB below full scale. The gain error is the amount of deviation between the measured transition point and the ideal transition point with the offset error removed.

ADC Dynamic Parameter Definitions

Aperture Jitter

Figure 15 shows the aperture jitter (t_{AJ}), which is the sample-to-sample variation in the aperture delay.

Aperture Delay

Aperture delay (t_{AD}) is the time defined between the rising edge of the sampling clock and the instant when an actual sample is taken (Figure 15).

Signal-to-Noise Ratio (SNR)

For a waveform perfectly reconstructed from digital samples, the theoretical maximum SNR is the ratio of the full-scale analog input (RMS value) to the RMS quantization error (residual error) and results directly from the ADC's resolution (N bits):

$$SNR(max) = 6.02dB \times N + 1.76dB \text{ (in dB)}$$

In reality, there are other noise sources besides quantization noise: thermal noise, reference noise, clock jitter, etc. SNR is computed by taking the ratio of the RMS signal to the RMS noise. RMS noise includes all spectral components to the Nyquist frequency excluding the fundamental, the first five harmonics, and the DC offset.

Signal-to-Noise and Distortion (SINAD)

SINAD is computed by taking the ratio of the RMS signal to the RMS noise. RMS noise includes all spectral components to the Nyquist frequency excluding the fundamental and the DC offset.

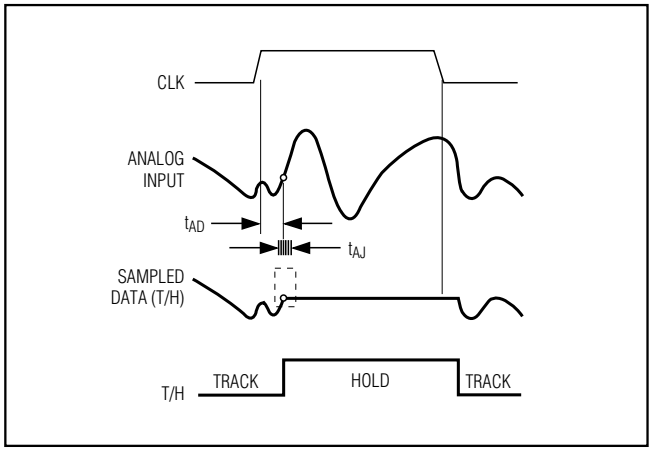

Figure 15. T/H Aperture Timing

Effective Number of Bits (ENOB)

ENOB specifies the dynamic performance of an ADC at a specific input frequency and sampling rate. An ideal ADC's error consists of quantization noise only. ENOB for a full-scale sinusoidal input waveform is computed from:

$$ENOB = (SINAD - 1.76) / 6.02$$

Total Harmonic Distortion (THD)

THD is typically the ratio of the RMS sum of the first five harmonics of the input signal to the fundamental itself. This is expressed as:

$$THD = 20 \times \log\left[\frac{\sqrt{(V_2^2 + V_3^2 + V_4^2 + V_5^2 + V_6^2)}}{V_1}\right]$$

where V_1 is the fundamental amplitude and V_2–V_6 are the amplitudes of the 2nd- through 6th-order harmonics.

Third Harmonic Distortion (HD3)

HD3 is defined as the ratio of the RMS value of the third harmonic component to the fundamental input signal.

Spurious-Free Dynamic Range (SFDR)

SFDR is the ratio expressed in decibels of the RMS amplitude of the fundamental (maximum signal component) to the RMS value of the next-largest spurious component, excluding DC offset.

Intermodulation Distortion (IMD)

IMD is the total power of the intermodulation products relative to the total input power when two tones, f_1 and f_2, are present at the inputs. The intermodulation products are ($f_1 \pm f_2$), ($2 \times f_1$), ($2 \times f_2$), ($2 \times f_1 \pm f_2$), ($2 \times f_2 \pm f_1$). The individual input tone levels are at -7dBFS.

3rd-Order Intermodulation (IM3)

IM3 is the power of the worst 3rd-order intermodulation product relative to the input power of either input tone when two tones, f_1 and f_2, are present at the inputs. The 3rd-order intermodulation products are ($2 \times f_1 \pm f_2$), ($2 \times f_2 \pm f_1$). The individual input tone levels are at -7dBFS.

Power-Supply Rejection

Power-supply rejection is defined as the shift in offset and gain error when the power supply is changed ±5%.

Small-Signal Bandwidth

A small -20dBFS analog input signal is applied to an ADC in such a way that the signal's slew rate does not

10-Bit, 11Msps, Ultra-Low-Power Analog Front-End

limit the ADC's performance. The input frequency is then swept up to the point where the amplitude of the digitized conversion result has decreased by 3dB. Note that the T/H performance is usually the limiting factor for the small-signal input bandwidth.

Full-Power Bandwidth

A large -0.5dBFS analog input signal is applied to an ADC, and the input frequency is swept up to the point where the amplitude of the digitized conversion result has decreased by 3dB. This point is defined as the full-power bandwidth frequency.

DAC Dynamic Parameter Definitions

Total Harmonic Distortion

THD is the ratio of the RMS sum of the output harmonics up to the Nyquist frequency divided by the fundamental:

$$THD = 20 \times \log \left[\frac{\sqrt{(V_2^2 + V_3^2 + \ldots + V_n^2)}}{V_1} \right]$$

where V_1 is the fundamental amplitude and V_2 through V_n are the amplitudes of the 2nd through nth harmonic up to the Nyquist frequency.

Spurious-Free Dynamic Range

Spurious-free dynamic range (SFDR) is the ratio of RMS amplitude of the fundamental (maximum signal component) to the RMS value of the next-largest distortion component up to the Nyquist frequency excluding DC.

Selector Guide

PART	DESCRIPTION	SAMPLING RATE (Msps)
MAX19700	Dual 10-Bit Rx ADC, Dual 10-Bit Tx DAC, Integrated TD-SCDMA Filters, Three 12-Bit Auxiliary DACs	7.5
MAX19708	Dual 10-Bit Rx ADC, Dual 10-Bit Tx DAC, Integrated TD-SCDMA Filters, Three 12-Bit Auxiliary DACs, 10-Bit Auxiliary ADC with 4:1 Input Mux	11
MAX19705/MAX19706†/MAX19707†	Dual 10-Bit Rx ADC, Dual 10-Bit Tx DAC, Three 12-Bit Auxiliary DACs, 10-Bit Auxiliary ADC with 4:1 Input Mux	7.5/22/45

†*Future product—contact factory for availability.*

Functional Diagram

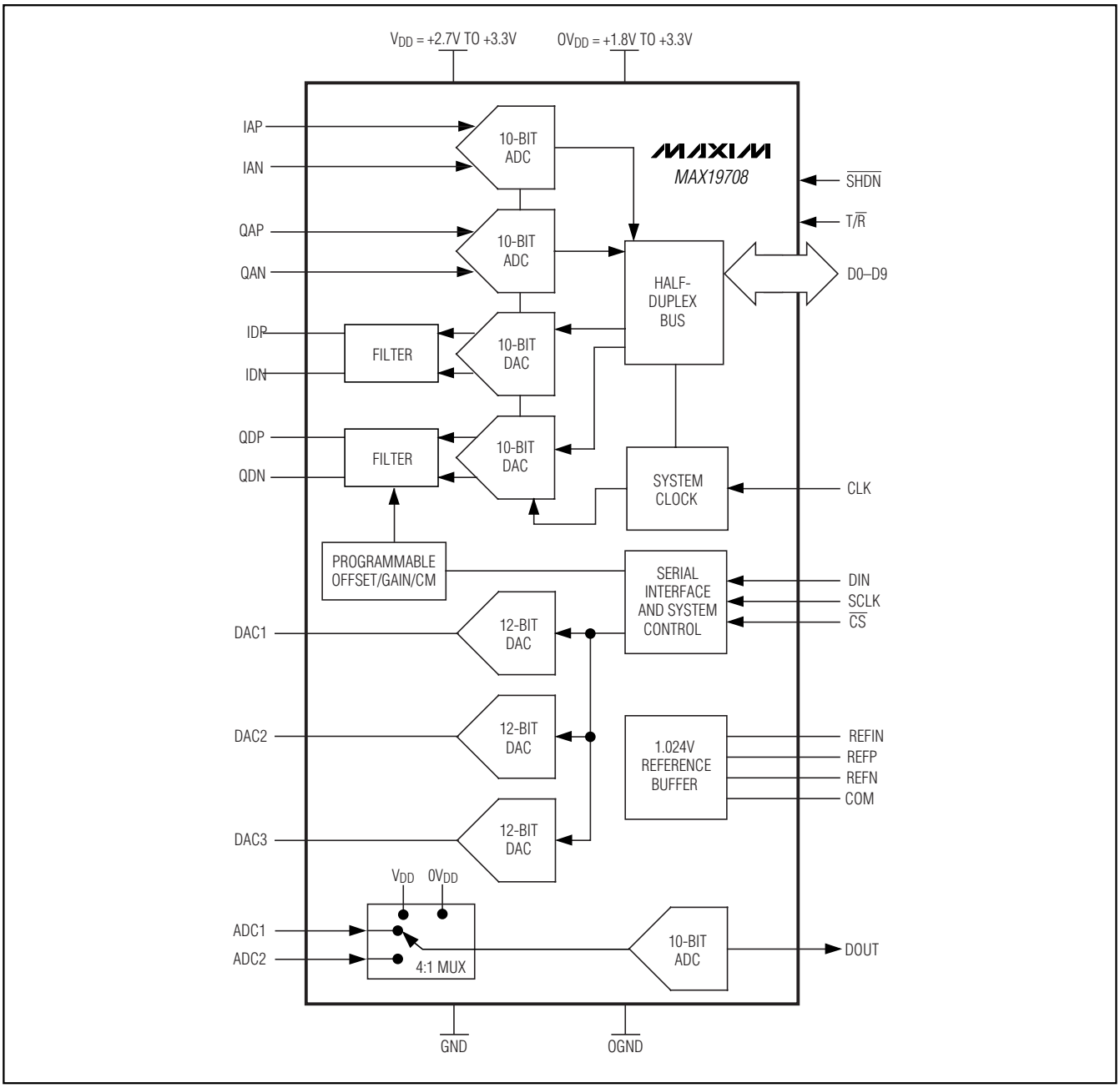

10-Bit, 11Msps, Ultra-Low-Power Analog Front-End

Package Information

(The package drawing(s) in this data sheet may not reflect the most current specifications. For the latest package outline information, go to **www.maxim-ic.com/packages**.)

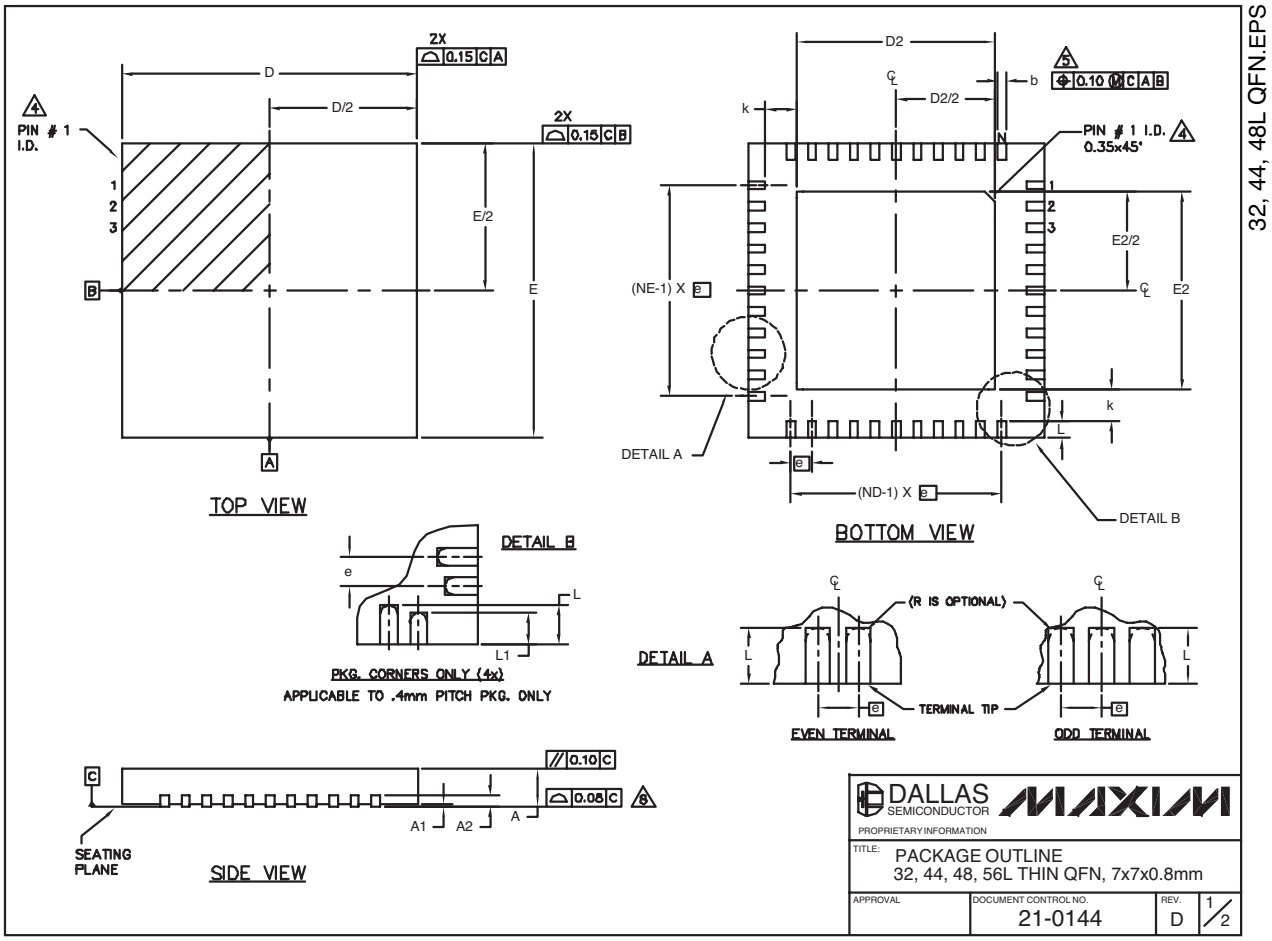

Package Information (continued)

(The package drawing(s) in this data sheet may not reflect the most current specifications. For the latest package outline information, go to **www.maxim-ic.com/packages**.)

COMMON DIMENSIONS

PKG	32L 7x7			44L 7x7			48L 7x7			CUSTOM PKG. (T4877-1) 48L 7x7			56L 7x7		
SYMBOL	MIN.	NOM.	MAX.	MIN.	NOM.	MAX.	MIN.	NOM.	MAX.	MIN.	NOM.	MAX.	MIN.	NOM.	MAX.
A	0.70	0.75	0.80	0.70	0.75	0.80	0.70	0.75	0.80	0.70	0.75	0.80	0.70	0.75	0.80
A1	0	0.02	0.05	0	0.02	0.05	0	0.02	0.05	0	0.02	0.05	0	–	0.05
A2	0.20 REF.			0.20 REF.			0.20 REF.			0.20 REF.			0.20 REF.		
b	0.25	0.30	0.35	0.20	0.25	0.30	0.20	0.25	0.30	0.20	0.25	0.30	0.15	0.20	0.25
D	6.90	7.00	7.10	6.90	7.00	7.10	6.90	7.00	7.10	6.90	7.00	7.10	6.90	7.00	7.10
E	6.90	7.00	7.10	6.90	7.00	7.10	6.90	7.00	7.10	6.90	7.00	7.10	6.90	7.00	7.10
e	0.65 BSC.			0.50 BSC.			0.50 BSC.			0.50 BSC.			0.40 BSC.		
k	0.25	–	–	0.25	–	–	0.25	–	–	0.25	–	–	0.25	0.35	0.45
L	0.45	0.55	0.65	0.45	0.55	0.65	0.30	0.40	0.50	0.45	0.55	0.65	0.40	0.50	0.60
L1	–	–	–	–	–	–	–	–	–	–	–	–	0.30	0.40	0.50
N	32			44			48			44			56		
ND	8			11			12			10			14		
NE	8			11			12			12			14		

EXPOSED PAD VARIATIONS

PKG. CODES	DEPOPULATED LEADS	D2			E2			JEDEC MO220 REV. C	DOWN BONDS ALLOWED
		MIN.	NOM.	MAX.	MIN.	NOM.	MAX.		
T3277-1	–	4.55	4.70	4.85	4.55	4.70	4.85	–	NO
T3277-2	–	4.55	4.70	4.85	4.55	4.70	4.85	–	YES
T4477-1	–	4.55	4.70	4.85	4.55	4.70	4.85	WKKD-1	NO
T4477-2	–	4.55	4.70	4.85	4.55	4.70	4.85	WKKD-1	YES
T4477-3	–	4.55	4.70	4.85	4.55	4.70	4.85	WKKD-1	YES
T4877-1**	13,24,37,48	4.20	4.30	4.40	4.20	4.30	4.40	–	NO
T4877-2	–	5.45	5.60	5.63	5.45	5.60	5.63	–	NO
T4877-3	–	4.95	5.10	5.25	4.95	5.10	5.25	–	YES
T4877-4	–	5.45	5.60	5.63	5.45	5.60	5.63	–	YES
T4877-5	–	2.40	2.50	2.60	2.40	2.50	2.60	–	NO
T4877-6	–	5.45	5.60	5.63	5.45	5.60	5.63	–	NO
T5677-1	–	5.20	5.30	5.40	5.20	5.30	5.40	–	YES

** NOTE: T4877-1 IS A CUSTOM 48L PKG. WITH 4 LEADS DEPOPULATED. TOTAL NUMBER OF LEADS ARE 44.

NOTES:

1. DIMENSIONING & TOLERANCING CONFORM TO ASME Y14.5M-1994.
2. ALL DIMENSIONS ARE IN MILLIMETERS. ANGLES ARE IN DEGREES.
3. N IS THE TOTAL NUMBER OF TERMINALS.
4. THE TERMINAL #1 IDENTIFIER AND TERMINAL NUMBERING CONVENTION SHALL CONFORM TO JESD 95-1 SPP-012. DETAILS OF TERMINAL #1 IDENTIFIER ARE OPTIONAL, BUT MUST BE LOCATED WITHIN THE ZONE INDICATED. THE TERMINAL #1 IDENTIFIER MAY BE EITHER A MOLD OR MARKED FEATURE.
5. DIMENSION b APPLIES TO METALLIZED TERMINAL AND IS MEASURED BETWEEN 0.25 mm AND 0.30 mm FROM TERMINAL TIP.
6. ND AND NE REFER TO THE NUMBER OF TERMINALS ON EACH D AND E SIDE RESPECTIVELY.
7. DEPOPULATION IS POSSIBLE IN A SYMMETRICAL FASHION.
8. COPLANARITY APPLIES TO THE EXPOSED HEAT SINK SLUG AS WELL AS THE TERMINALS.
9. DRAWING CONFORMS TO JEDEC MO220 EXCEPT THE EXPOSED PAD DIMENSIONS OF T3277-1; T4877-1/-2/-3/-4/-5/-6 & T5677-1.
10. WARPAGE SHALL NOT EXCEED 0.10 mm.

DALLAS SEMICONDUCTOR MAXIM

PROPRIETARY INFORMATION

TITLE: PACKAGE OUTLINE 32, 44, 48, 56L THIN QFN, 7x7x0.8mm

APPROVAL	DOCUMENT CONTROL NO.	REV.	
	21-0144	D	2/2

Maxim cannot assume responsibility for use of any circuitry other than circuitry entirely embodied in a Maxim product. No circuit patent licenses are implied. Maxim reserves the right to change the circuitry and specifications without notice at any time.

© 2005 Maxim Integrated Products Printed USA MAXIM is a registered trademark of Maxim Integrated Products, Inc.

Looking for pricing, stock, or lifecycle information?

Click below to explore more details on WIN SOURCE:

- View MAX19708ETM+ on WIN SOURCE
- Maxim Integrated Information

Optimize Your Supply Chain with WIN SOURCE Solutions

- Global Sourcing Solution
- Obsolete Management
- Cost Control Management
- Shortage Management
- Alternative Solution
- Excess Inventory Management