THE DATASHEET OF

ADN2830ACP32

www.win-source.net 0086-755-83957316

Continuous Wave Laser Average Power Controller

ADN2830

FEATURES

Bias Current Range 4 mA to 200 mA
Monitor Photodiode Current 50 μA to 1200 μA
Closed-Loop Control of Average Power
Laser FAIL and Laser DEGRADE Alarms
Automatic Laser Shutdown, ALS
Full Current Parameter Monitoring
5 V Operation
–40°C to +85°C Temperature Range
5 mm × 5 mm 32-Lead LFCSP Package

APPLICATIONS

Fiber Optic Communication

GENERAL DESCRIPTION

The ADN2830 provides closed-loop control of the average optical power of a continuous wave (CW) laser diode (LD) after initial factory setup. The control loop adjusts the laser IBIAS to maintain a constant back facet monitor photodiode (MPD) current and thus a constant laser optical power. The external PSET resistor is adjusted during factory setup to set the desired optical power. R_{PSET} is set at $1.23/I_{AV}$, where I_{AV} is the MPD current corresponding to the desired optical power. Programmable alarms are provided for laser fail (end of life) and laser degrade (impending fail).

To provide monitoring of the MPD current, the MPD can be connected to the IMPD pin. In this case, the MPD current is mirrored to the IMPDMON pin to provide a monitor and internally to the PSET pin to close the control loop.

By closing the feedback using IBMON rather than an MPD connected to PSET, the device is configured to control a constant current in the laser rather than a constant optical output power.

FUNCTIONAL BLOCK DIAGRAM

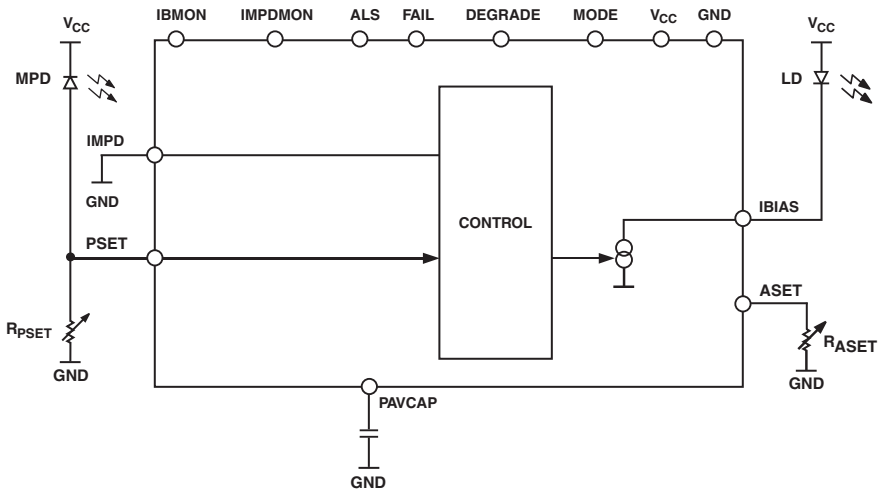

REV. B

Information furnished by Analog Devices is believed to be accurate and reliable. However, no responsibility is assumed by Analog Devices for its use, nor for any infringements of patents or other rights of third parties that may result from its use. No license is granted by implication or otherwise under any patent or patent rights of Analog Devices. Trademarks and registered trademarks are the property of their respective companies.

One Technology Way, P.O. Box 9106, Norwood, MA 02062-9106, U.S.A.
Tel: 781/329-4700 www.analog.com
Fax: 781/461-3113
© 2012 Analog Devices, Inc. All rights reserved.

ADN2830–SPECIFICATIONS (V_{CC} = 5 V ± 10%. All specifications T_{MIN} to T_{MAX}, unless otherwise noted[1]. Typical values as specified at 25°C.)

Parameter	Min	Typ	Max	Unit	Conditions/Comments
LASER BIAS (BIAS)					
Output Current IBIAS	4		200	mA	
Compliance Voltage	1.2		V_{CC}	V	
IBIAS during ALS			40	µA	
ALS Response Time		10		µs	
MONITOR PD (IMPD)					
Current	50		1200	µA	
Input Voltage			1.6	V	
POWER SET INPUT (PSET)					
Capacitance			80	pF	
Input Current	50		1200	µA	
Voltage	1.15	1.23	1.35	V	
ALARM SET (ASET)					
Allowable Resistance Range	1.2		13	kΩ	
Voltage	1.15	1.23	1.35	V	
Hysteresis		5		%	
LOGIC INPUTS (ALS, MODE)					
V_{IH}	2.4			V	
V_{IL}			0.8	V	
ALARM OUTPUTS (Internal 30 kΩ Pull-Up)					
V_{OH}	2.4			V	
V_{OL}			0.4	V	
IBMON IMPDMON					
IBMON, Division Ratio		100		A/A	
IMPDMON Division Ratio		1		A/A	
Compliance Voltage	0		V_{CC} – 1.2	V	
SUPPLY					
I_{CC}[2]		25		mA	IBIAS = 0
V_{CC}	4.5	5.0	5.5	V	

NOTES
[1]Temperature range: –40°C to +85°C.
[2]I_{CC} for power calculation is the typical I_{CC} given.

Specifications subject to change without notice.

ABSOLUTE MAXIMUM RATINGS[1]

(T_A = 25°C, unless otherwise noted.)

V_{CC} to GND . . . . . 7 V
Digital Inputs (ALS, Mode) . . . . . –0.3 V to V_{CC} + 0.3 V
Operating Temperature Range
  Industrial . . . . . –40°C to +85°C
  Storage Temperature Range . . . . . –65°C to +150°C
Junction Temperature (T_J Max) . . . . . 150°C
  θ_{JA} Thermal Impedance[2] . . . . . 32°C/W
  32-Lead LFCSP Package,
  Power Dissipation . . . . . (T_J Max – T_A)/θ_{JA} mW
Lead Temperature (Soldering 10 sec) . . . . . 300°C

NOTES

[1]Stresses above those listed under Absolute Maximum Ratings may cause permanent damage to the device. This is a stress rating only; functional operation of the device at these or any other conditions above those listed in the operational sections of this specification is not implied. Exposure to absolute maximum rating conditions for extended periods may affect device reliability.

[2]θ_{JA} is defined when the part is soldered onto a 4-layer board.

CAUTION

ESD (electrostatic discharge) sensitive device. Electrostatic charges as high as 4000 V readily accumulate on the human body and test equipment and can discharge without detection. Although the ADN2830 features proprietary ESD protection circuitry, permanent damage may occur on devices subjected to high energy electrostatic discharges. Therefore, proper ESD precautions are recommended to avoid performance degradation or loss of functionality.

PIN CONFIGURATION

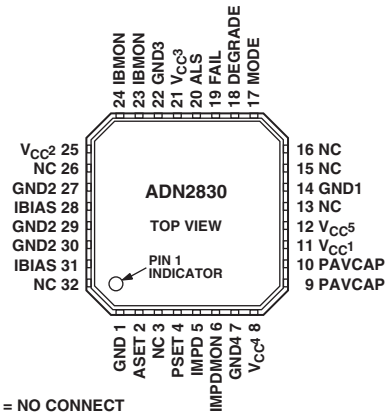

NC = NO CONNECT

THE EXPOSED PAD ON THE BOTTOM OF THE PACKAGE MUST BE CONNECTED TO V_{CC} OR THE GND PLANE.

PIN FUNCTION DESCRIPTIONS

Pin No.	Mnemonic	Function
1	GND	Supply Ground
2	ASET	Alarm Current Threshold Set Pin
3	NC	No Connect
4	PSET	Average Optical Power Set Pin
5	IMPD	Monitor Photodiode Input
6	IMPDMON	Mirrored Current from Monitor Photodiode—Current Source
7	GND4	Supply Ground
8	$V_{CC}4$	Supply Voltage
9	PAVCAP	Average Power Loop Capacitor
10	PAVCAP	Average Power Loop Capacitor
11	$V_{CC}1$	Supply Voltage
12	$V_{CC}5$	Supply Voltage
13	NC	No Connect
14	GND1	Supply Ground
15	NC	No Connect
16	NC	No Connect
17	MODE	Mode Select: Tied to ALS = Standalone, High = Parallel Current Booster
18	DEGRADE	DEGRADE Alarm Output
19	FAIL	FAIL Alarm Output
20	ALS	Automatic Laser Shutdown
21	$V_{CC}3$	Supply Voltage
22	GND3	Supply Ground
23	IBMON	Bias Current Monitor Output—Current Source
24	IBMON	Bias Current Monitor Output—Current Source
25	$V_{CC}2$	Supply Voltage
26	NC	No Connect
27	GND2	Supply Ground
28	IBIAS	Laser Diode Bias Current
29	GND2	Supply Ground
30	GND2	Supply Ground
31	IBIAS	Laser Diode Bias Current
32	NC	No Connect
EP	Exposed Pad	The exposed pad on the bottom of the package must be connected to V_{CC} or the GND plane.

GENERAL

Laser diodes have current-in to light-out transfer functions as shown in Figure 1. Two key characteristics of this transfer function are the threshold current, I_{TH}, and slope in the linear region beyond the threshold current, referred to as slope efficiency (LI).

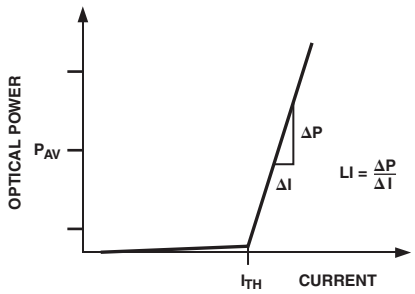

Figure 1. Laser Transfer Function

CONTROL

A monitor photodiode (MPD) is required to control the laser diode. The MPD current is fed into the ADN2830 to control the power, continuously adjusting the bias current in response to the laser's changing threshold current and light to current (LI) slope (slope efficiency).

The ADN2830 uses automatic power control (APC) to maintain a constant power over time and temperature.

The average power is controlled by the R_{PSET} resistor connected between the PSET pin and ground. The PSET pin is kept 1.23 V above GND. For an initial setup, the R_{PSET} resistor can be calculated using the following formula.

$$R_{PSET} = \frac{1.23\,V}{I_{AV}}$$

where I_{AV} is average MPD current.

Note the I_{PSET} will change from device to device. It is not required to know exact values for LI and MPD optical coupling.

LOOP BANDWIDTH SELECTION

Capacitor values greater than 22 nF are used to set the actual loop bandwidth. This capacitor is placed between the PAVCAP pin and ground. It is important that the capacitor is a low leakage multilayer ceramic with an insulation resistance greater than 100 GΩ or a time constant of 1000 sec, whichever is less.

ALARMS

The ADN2830 has two active high alarms, DEGRADE and FAIL. A resistor between ground and the ASET pin is used to set the current at which these alarms are raised. The current through the ASET resistor is a ratio of ($N \times 200$):1 to the FAIL alarm threshold (N is the number of ADN2830s in parallel). The DEGRADE alarm will be raised at 90% of this level.

Example:

$$I_{FAIL} = 50\,mA,\ N = 1 \therefore I_{DEGRADE} = 45\,mA$$

$$I_{ASET} = \frac{I_{BIASTRIP}}{N \times 200} = \frac{50\,mA}{200} = 250\,\mu A$$

$$^{*}R_{ASET} = \frac{1.23\,V}{I_{ASET}} = \frac{1.23}{250\,\mu A} = 4.92\,k\Omega$$

The laser degrade alarm, DEGRADE, gives a warning of imminent laser failure if the laser diode degrades further or environmental conditions continue to stress the laser diode, e.g., increasing temperature.

The laser fail alarm, FAIL, is activated when:

- The ASET threshold is reached.
- The ALS pin is set high. This shuts off the modulation and bias currents to the laser diode, resulting in the MPD current dropping to zero.

DEGRADE will only be raised when the bias current exceeds 90% of the ASET current.

MONITOR CURRENTS

IBMON and IMPDMON are current controlled current sources from V_{CC}. They mirror the bias and MPD current for increased monitoring functionality. An external resistor to GND gives a voltage proportional to the current monitored. If the IMPDMON function is not used, the IMPD pin must be grounded and the monitor photodiode must be tied directly to the PSET pin.

AUTOMATIC LASER SHUTDOWN

When ALS is logic high, the bias current is turned off. Correct operation of ALS can be confirmed by the fail alarm being raised when ALS is asserted. Note that this is the only time DEGRADE will be low while FAIL is high.

MODE

The MODE feature on the ADN2830 allows the user to operate more than one ADN2830 in parallel current boosting mode to achieve up to $N \times 200$ mA of bias current (N is the number of ADN2830s in parallel). When using parallel boosting mode, one device is run as the master, the other as the slave. The MODE pin on the master is tied to ALS and the MODE pin on the slave is tied high (see Figure 3 for reference circuit).

ALARM INTERFACES

The FAIL and DEGRADE outputs have an internal 30 kΩ pull-up resistor that is used to pull the digital high value to $V_{CC.}$ However, the alarm output may be overdriven with an external resistor allowing the alarm interfacing to non-V_{CC} levels. Non-V_{CC} alarm output levels must be below the V_{CC} used for the ADN2830.

*The smallest value for R_{ASET} is 1.2 kΩ, as this corresponds to the IBIAS maximum of N × 200 mA.

POWER CONSUMPTION

The ADN2830 die temperature must be kept below 125°C. The exposed paddle should be connected in such a manner that it is at the same potential as the ADN2830 ground pins. Power consumption can be calculated using the following formulas.

$$T_{DIE} = T_{AMBIENT} + \theta_{JA} \times P$$

$$I_{CC} = I_{CCMIN}$$

$$P = V_{CC} \times I_{CC} + \left(IBIAS \times V_{BIAS_PIN}\right)$$

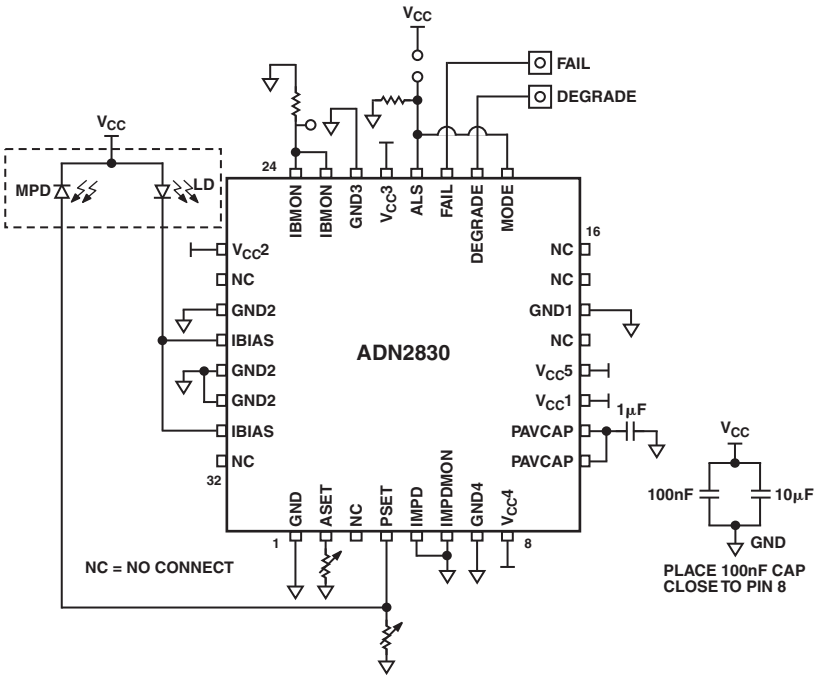

Figure 2. Test Circuit, Standalone Mode, IMPD Input Not Used

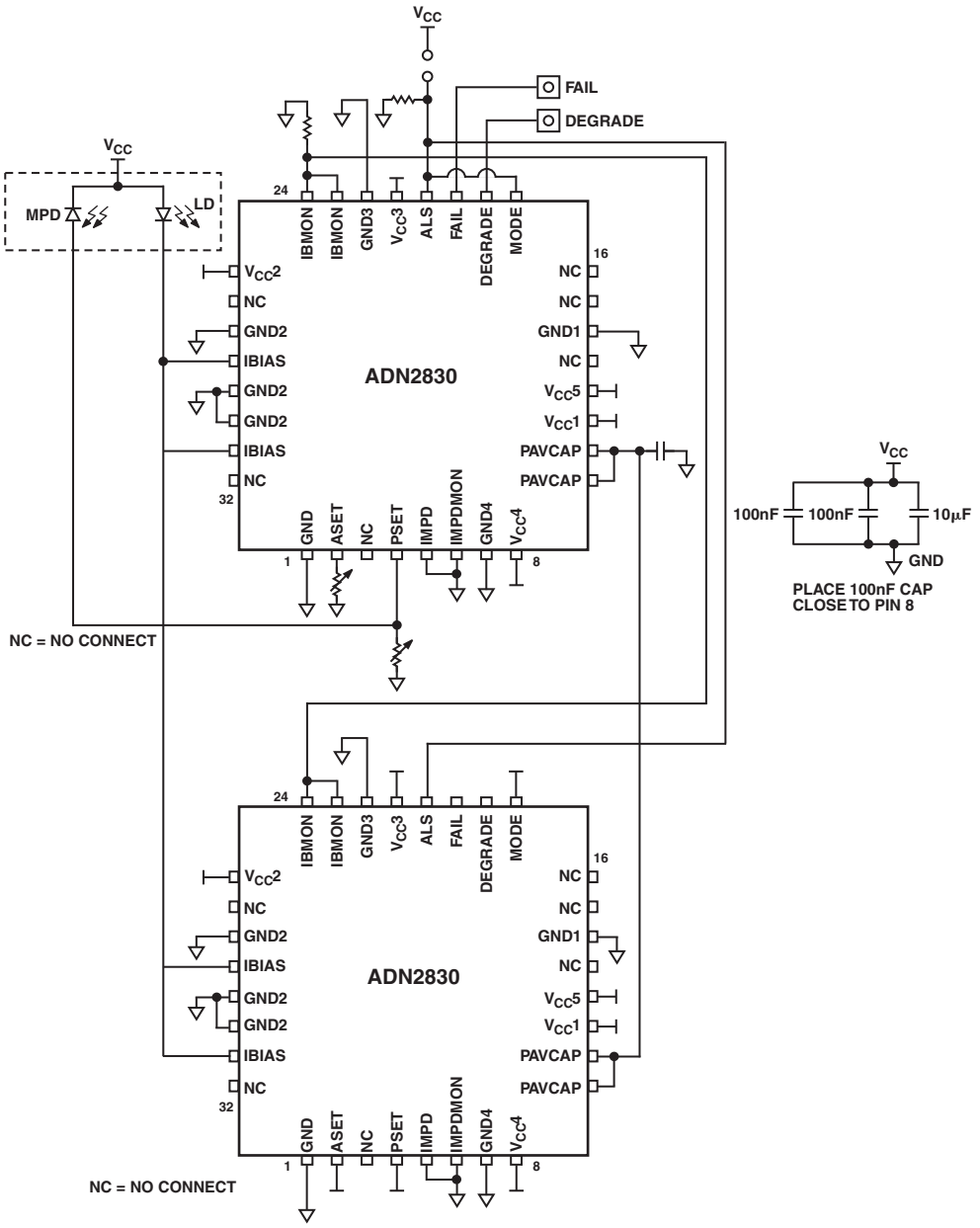

Figure 3. Test Circuit, Second ADN2830 Used in Parallel Current Boosting Mode to Achieve 400 mA Max IBIAS

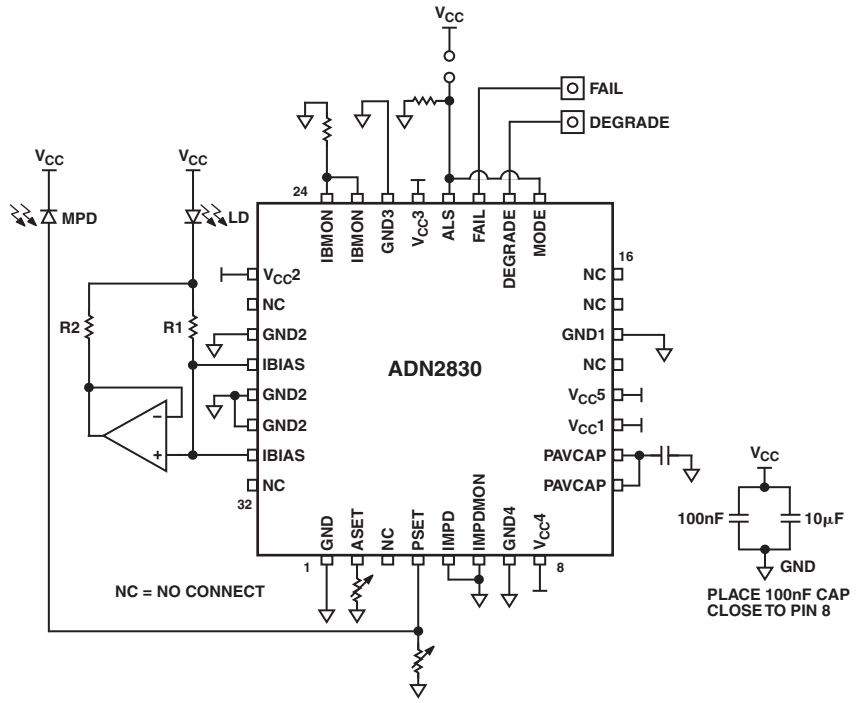

NOTES
1. FOR DIGITAL CONTROL, REPLACE R_{PSET} WITH A DIGITAL POTENTIOMETER FROM ANALOG DEVICES: ADN2850 10-BIT RESOLUTION, 35 ppm/°C TC, EEPROM; AD5242 8-BIT RESOLUTION, 30 ppm/°C TC.
2. TOTAL CURRENT TO LASER = IBIAS + IBIAS × R1/R2.
3. FOR BEST ACCURACY, SIZE R1 TO HAVE A MAXIMUM VOLTAGE DROP ACROSS IT WITHIN THE HEADROOM CONSTRAINTS.
4. FOR 250 mA EXTRA IBIAS (450 mA TOTAL) FROM AMP1, USE AD8591 AMPLIFIER. AMP1 IS THE OPERATIONAL AMPLIFIER SHOWN IN THIS FIGURE.
5. FOR 350 mA EXTRA IBIAS (550 mA TOTAL) FROM AMP1, USE ANALOG DEVICES' SSM2211 AMPLIFIER. AMP1 IS THE OPERATIONAL AMPLIFIER SHOWN IN THIS FIGURE.

Figure 4. The ADN2830 Configured with Current Multiplier

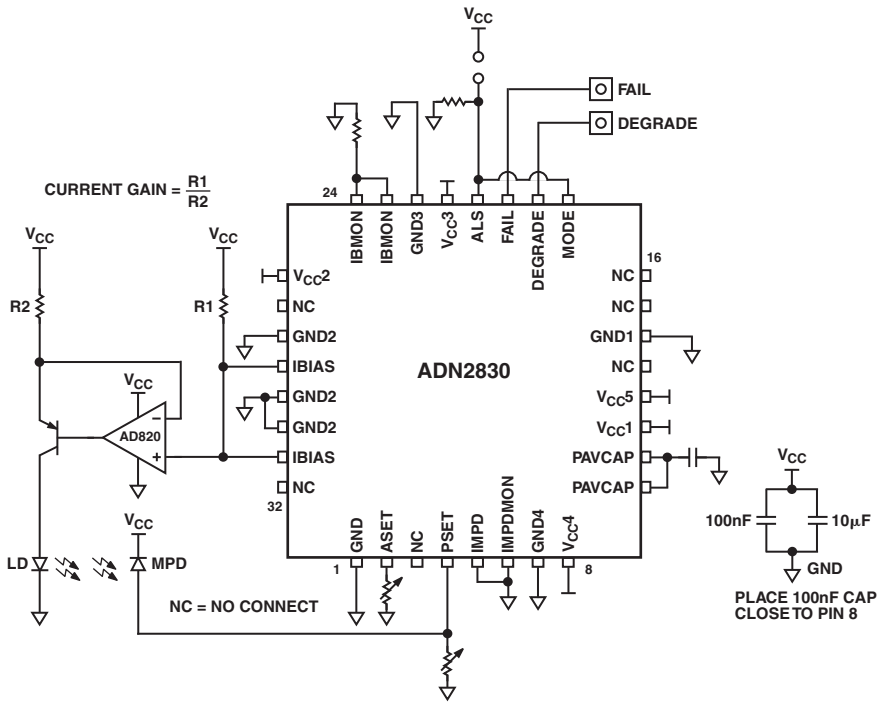

Figure 5. The ADN2830 Configured as Average Power Controller (Bias Current Sourced)

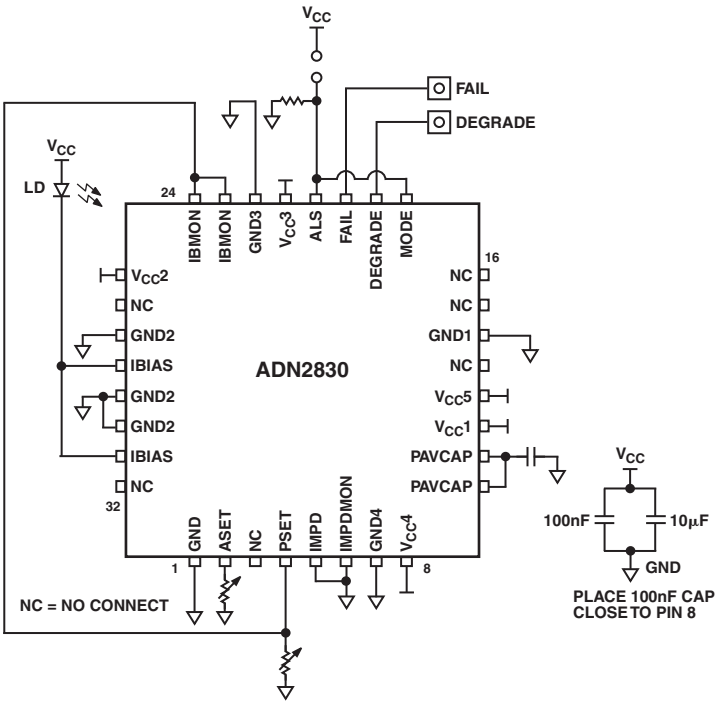

Figure 6. The ADN2830 Configured as a Controlled Current Source by Feeding Back the Bias Monitor Current to R_{PSET}

OUTLINE DIMENSIONS

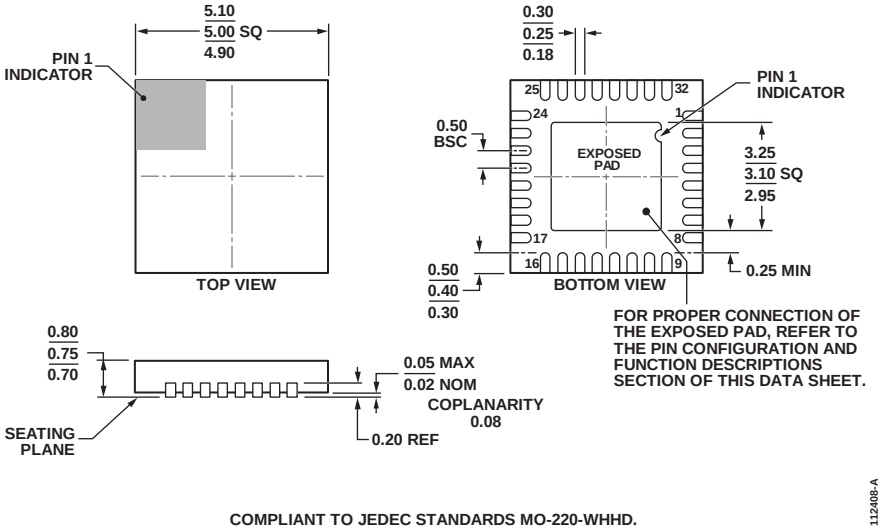

COMPLIANT TO JEDEC STANDARDS MO-220-WHHD.

Figure 7. 32-Lead Lead Frame Chip Scale Package [LFCSP_WQ]
5 mm × 5 mm Body, Very Very Thin Quad
(CP-32-7)
Dimensions shown in millimeters

ORDERING GUIDE

Model[1]	Temperature Range	Package Description	Package Option
ADN2830ACPZ32	−40°C to +85°C	32-Lead Lead Frame Chip Scale Package [LFCSP_WQ]	CP-32-7
ADN2830-EVALZ		Evaluation Board	

[1] Z = RoHS Compliant Part.

REVISION HISTORY

3/12—Rev. A to Rev. B

Added EPAD Notation 4
Updated Outline Dimensions 10
Changes to Ordering Guide 10

6/03—Rev. 0 to Rev. A

Changes to Absolute Maximum Ratings 3
Updated Outline Dimensions 10

©2012 Analog Devices, Inc. All rights reserved. Trademarks and registered trademarks are the property of their respective owners.
D03020-0-3/12(B)

Looking for pricing, stock, or lifecycle information?

Click below to explore more details on WIN SOURCE:

- View ADN2830ACP32 on WIN SOURCE
- Analog Devices Inc. Information

Optimize Your Supply Chain with WIN SOURCE Solutions

- Global Sourcing Solution
- Obsolete Management
- Cost Control Management
- Shortage Management
- Alternative Solution
- Excess Inventory Management