THE DATASHEET OF

3906

www.win-source.net 0086-755-83957316

3906

AC axial compact fan

ebm-papst St. Georgen GmbH & Co. KG
Hermann-Papst-Str. 1
D-78112 St. Georgen
Phone +49 (0) 7724 81-0
Fax +49 (0) 7724 81-1309
info2@de.ebmpapst.com
www.ebmpapst.com

Nominal data

Type	3906	
Phase		1~
Nominal voltage	VAC	115
Frequency	Hz	60
Speed (rpm)	min^{-1}	3150
Power consumption	W	9.0
Min. ambient temperature	°C	-40
Max. ambient temperature	°C	80
Air flow	m^3/h	70
Sound power level	B	5.1
Sound pressure level	dB(A)	40

ml = Max. load · me = Max. efficiency · fa = Free air · cs = Customer specification · ce = Customer equipment
Subject to change

AC axial compact fan

Technical description

Weight	0.280 kg
Dimensions	92 x 92 x 25 mm
Impeller material	Mineral-reinforced PA plastic
Housing material	Die-cast aluminum
Part no.	9282708101
Airflow direction	Exhaust over struts
Direction of rotation	Counterclockwise, viewed toward rotor
Storage	Ball bearing
Service life L10 at 40 °C	60000 h
Service life L10 at maximum temperature	22500 h
Cable	2 flat plugs 2.8 x 0.5 mm. Housing with grounding lug.
Motor protection	Protected from overload by impedance protection
Approval	VDE, CSA, UL, CE

ebm-papst St. Georgen GmbH & Co. KG · Hermann-Papst-Str. 1 · D-78112 St. Georgen · Phone +49 (0) 7724 81-0 · Fax +49 (0) 7724 81-1309 · info2@de.ebmpapst.com · www.ebmpapst.com

AC axial compact fan

Product drawing

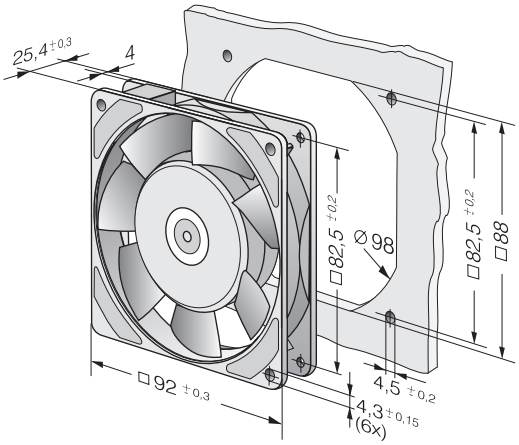

ebm-papst St. Georgen GmbH & Co. KG · Hermann-Papst-Str. 1 · D-78112 St. Georgen · Phone +49 (0) 7724 81-0 · Fax +49 (0) 7724 81-1309 · info2@de.ebmpapst.com · www.ebmpapst.com

AC axial compact fan

Curves: Air performance

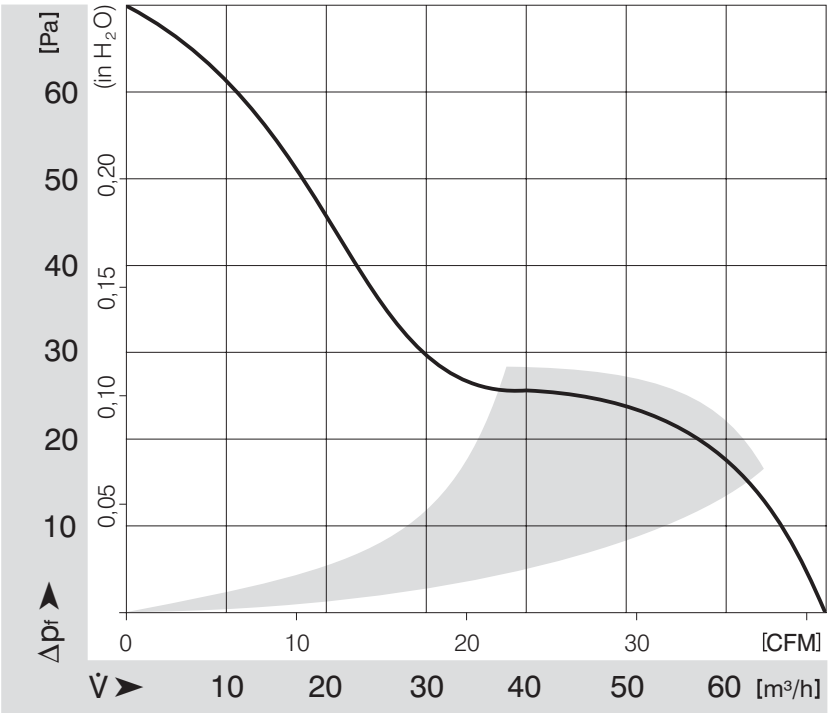

ebm-papst St. Georgen GmbH & Co. KG · Hermann-Papst-Str. 1 · D-78112 St. Georgen · Phone +49 (0) 7724 81-0 · Fax +49 (0) 7724 81-1309 · info2@de.ebmpapst.com · www.ebmpapst.com

Looking for pricing, stock, or lifecycle information?

Click below to explore more details on WIN SOURCE:

- View 3906 on WIN SOURCE
- ebm-papst Information

Optimize Your Supply Chain with WIN SOURCE Solutions

- Global Sourcing Solution
- Obsolete Management
- Cost Control Management
- Shortage Management
- Alternative Solution
- Excess Inventory Management