THE DATASHEET OF

MASWCC0009

MASWCC0009

GaAs SP4T Switch, Absorptive
DC - 3.0 GHz

Rev. V7

Features

- Typical Isolation: 35 dB (2.0 GHz)
- Typical Insertion Loss: 1.2 dB (2.0 GHz)
- Integral ASIC/CMOS Driver
- 50 Ohm Nominal Impedance
- Low DC Power Consumption
- Test Boards Available
- Lead-Free QSOP-24 Package
- 100% Matte Tin Plating over Copper
- Halogen-Free “Green” Mold Compound
- 260°C Reflow Compatible
- RoHS* Compliant Version of SW65-0440

Description

M/A-COM's MASWCC0009 is a GaAs MMIC absorptive SP4T switch with an integral silicon ASIC driver. This device is in a 24-lead plastic package. This switch offers excellent broadband performance and repeatability from DC to 3 GHz, while maintaining low DC power dissipation. The MASWCC0009 is ideally suited for wireless infrastructure applications.

Ordering Information

Part Number	Package
MASWCC0009	Bulk Packaging
MASWCC0009TR	1000 piece reel
MASWCC0009-TB	Sample Test Board

Note: Reference Application Note M513 for reel size information.

Functional Schematic

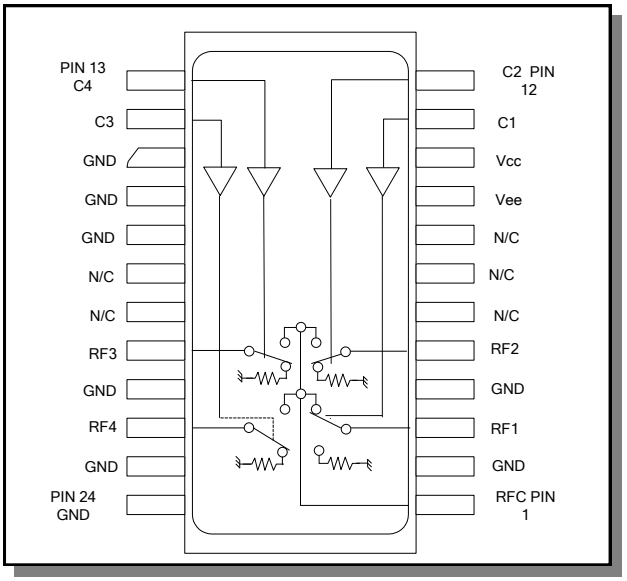

Pin Configuration

Pin No.	Function	Pin No.	Function
1	RFC	13	C4
2	GND	14	C3
3	RF1	15	GND
4	GND	16	GND
5	RF2	17	GND
6	NC	18	NC
7	NC	19	NC
8	NC	20	RF3
9	V_{EE}	21	GND
10	V_{CC}	22	RF4
11	C1	23	GND
12	C2	24	GND

NC = No Connection

* Restrictions on Hazardous Substances, European Union Directive 2002/95/EC.

M/A-COM Technology Solutions Inc. (MACOM) and its affiliates reserve the right to make changes to the product(s) or information contained herein without notice.
Visit www.macom.com for additional data sheets and product information.

For further information and support please visit:
https://www.macom.com/support

Electrical Specifications: T_A = 25°C

Parameter	Test Conditions	Units	Min	Typ	Max
Insertion Loss	DC - 2.0 GHz DC - 3.0 GHz	dB dB	— —	1.2 1.3	1.8 2.5
Isolation	DC - 2.0 GHz DC - 3.0 GHz	dB dB	32 25	35 29	— —
VSWR RF1-RF4 On RF1- RF4 Off RFC RFC	DC - 3.0 GHz DC - 3.0 GHz DC - 2.0 GHz DC - 3.0 GHz	Ratio Ratio Ratio Ratio	— — — —	1.2:1 1.4:1 1.2:1 1.6:1	1.6:1 1.8:1 1.5:1 2.2:1
Switching Speed[1] T_{rise} T_{fall} T_{on} T_{off} Transients	 10%/90%, 90%/10% 50% TTL to 90%/10% RF In-band (peak to peak)	 ns ns mV	 — — —	 15 50 50	 50 150 150
1 dB Compression	.05 GHz .5 - 3.0 GHz	dBm dBm	— —	+20 +27	— —
Input IP_3	Two tone inputs 0.05 GHz up to +5 dBm 0.5 - 3.0 GHz	dBm dBm	— —	+35 +46	— —
V_{CC}	—	V	+4.5	+5.0	+5.5
V_{EE}	—	V	-8.0	-5.0	-4.75
V_{IL} V_{IH}	LOW-level input voltage HIGH-level input voltage	V V	0.0 2.0	— —	0.8 5.0
Iin (Input Leakage Current)	Vin = V_{CC} or GND	uA	-1.0	—	1.0
Icc (Quiescent Supply Current)	Vcntrl = V_{CC} or GND	uA	—	250	400
ΔIcc (Additional Supply Current Per TTL Input Pin)	V_{CC} = Max, Vcntrl = V_{CC} - 2.1 V	mA	—	—	1.0
I_{EE}	V_{EE} min to max, Vin = V_{IL} or V_{IH}	mA	-1.0	-0.2	—

1. Decoupling capacitors (0.1 µF) are required on the power supply lines.

Absolute Maximum Ratings [2,3,4]

Parameter	Absolute Maximum
Max. Input Power 0.05 GHz 0.5 - 3.0 GHz	 +27 dBm +34 dBm
V_{CC}	-0.5V ≤ V_{CC} ≤ +7.0V
V_{EE}	-8.5V ≤ V_{EE} ≤ +0.5V
V_{CC} - V_{EE}	-0.5V ≤ V_{CC} - V_{EE} ≤ 14.5V
Vin[5]	-0.5V ≤ Vin ≤ V_{CC} + 0.5V
Operating Temperature	-40ºC to +85ºC
Storage Temperature	-65ºC to +125ºC

2. Exceeding any one or combination of these limits may cause permanent damage to this device.
3. M/A-COM does not recommend sustained operation near these survivability limits.
4. When the RF input is applied to the terminated port, the absolute maximum power is +30 dBm.
5. Standard CMOS TTL interface, latch-up will occur if logic

Truth Table (Switch)

TTL				RF Common To:			
C1	C2	C3	C4	RF1	RF2	RF3	RF4
1	0	0	0	On	Off	Off	Off
0	1	0	0	Off	On	Off	Off
0	0	1	0	Off	Off	On	Off
0	0	0	1	Off	Off	Off	On

0 = TTL Low; 1 = TTL High

M/A-COM Technology Solutions Inc. (MACOM) and its affiliates reserve the right to make changes to the product(s) or information contained herein without notice.
Visit www.macom.com for additional data sheets and product information.

For further information and support please visit:
https://www.macom.com/support

Recommended PCB Layout—SP4T

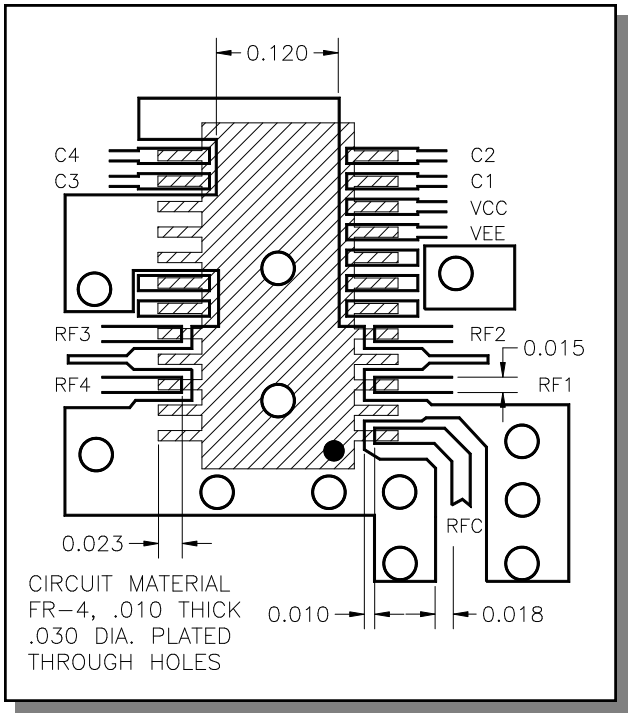

Recommended PCB Layout—SP2T

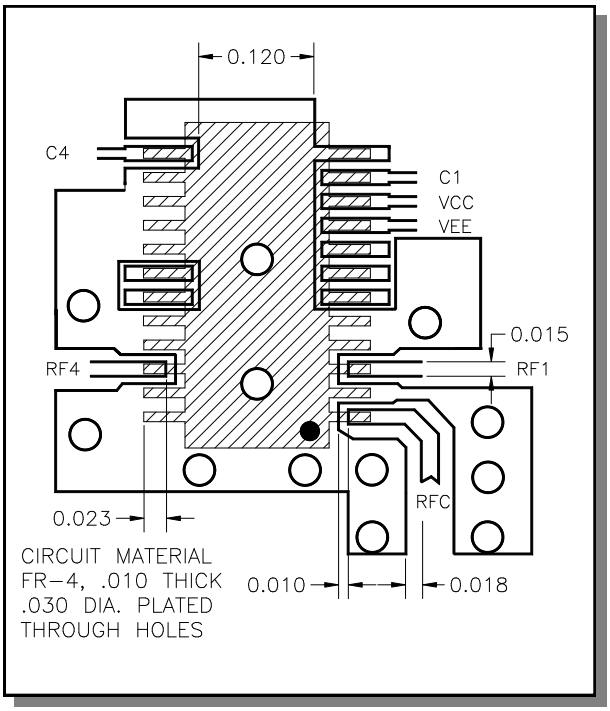

Evaluation Board - SW65-0440-TB

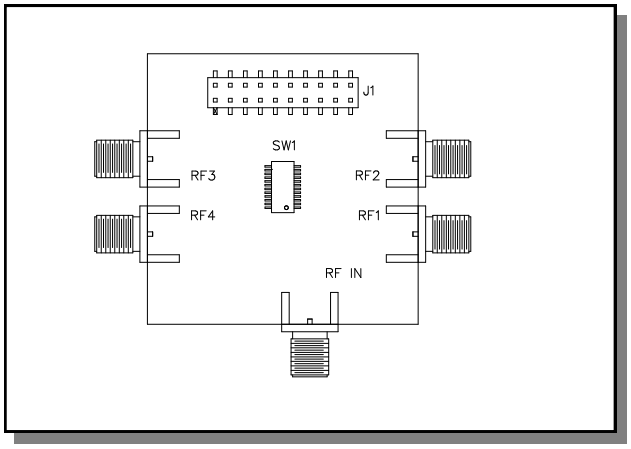

Handling Procedures

Please observe the following precautions to avoid damage:

Static Sensitivity

Gallium Arsenide Integrated Circuits are sensitive to electrostatic discharge (ESD) and can be damaged by static electricity. Proper ESD control techniques should be used when handling these devices.

M/A-COM Technology Solutions Inc. (MACOM) and its affiliates reserve the right to make changes to the product(s) or information contained herein without notice.
Visit www.macom.com for additional data sheets and product information.

For further information and support please visit:
https://www.macom.com/support

Typical Performance Curves

Insertion Loss (dB) @ +25ºC

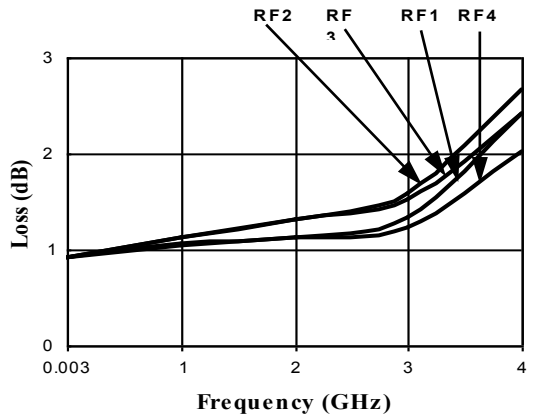

Loss Variation Over Temp. (dB)

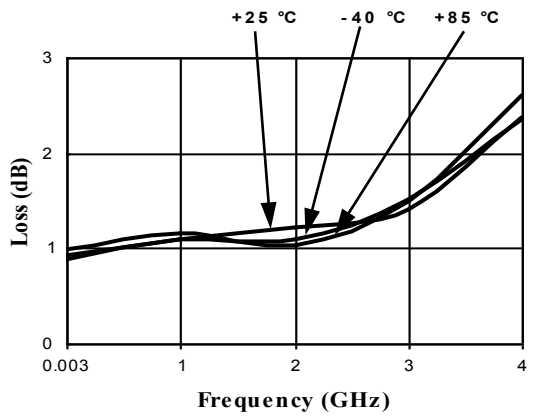

RF1 - RF4 On VSWR @ +25°C

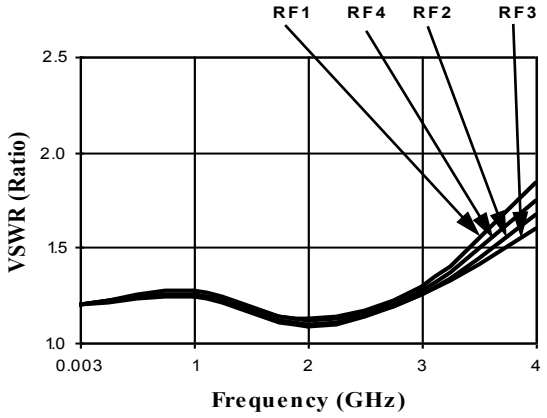

RF1 - RF4 On VSWR Temp. Variation

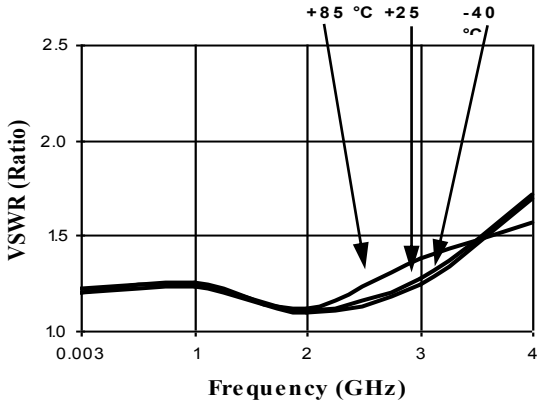

RFC On VSWR @ +25°C

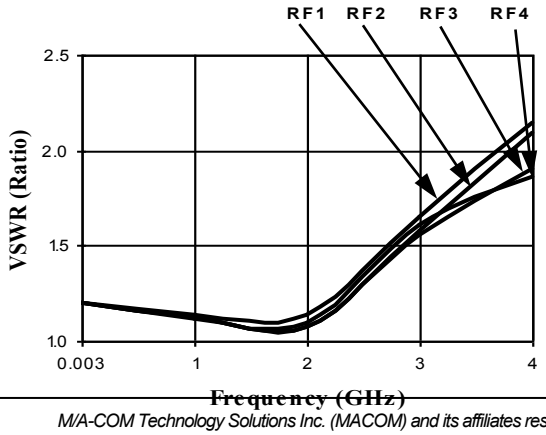

RFC On VSWR Temp. Variation

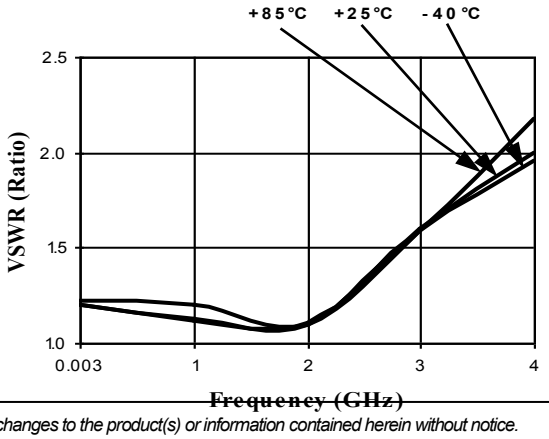

M/A-COM Technology Solutions Inc. (MACOM) and its affiliates reserve the right to make changes to the product(s) or information contained herein without notice.
Visit www.macom.com for additional data sheets and product information.

For further information and support please visit:
https://www.macom.com/support

Typical Performance Curves

RF1 - RF4 Off VSWR @ +25°C

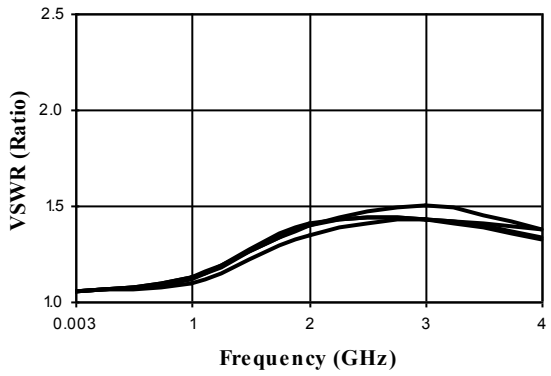

RF1 - RF4 Off VSWR Temp. Variation

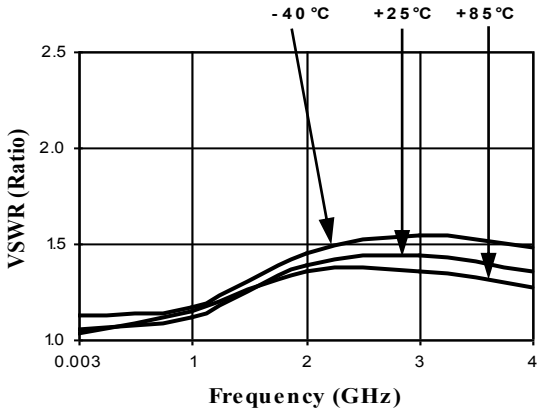

Isolation (dB) @ +25°C

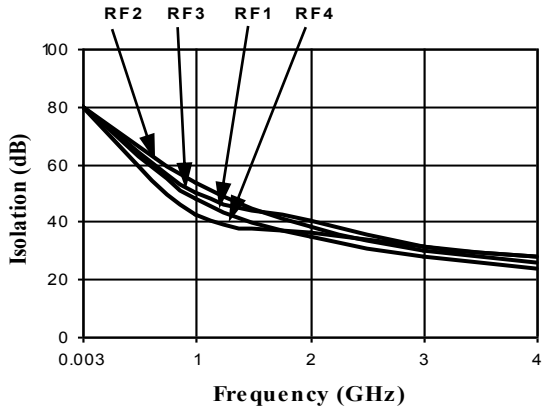

Isolation Temp. Variation (dB)

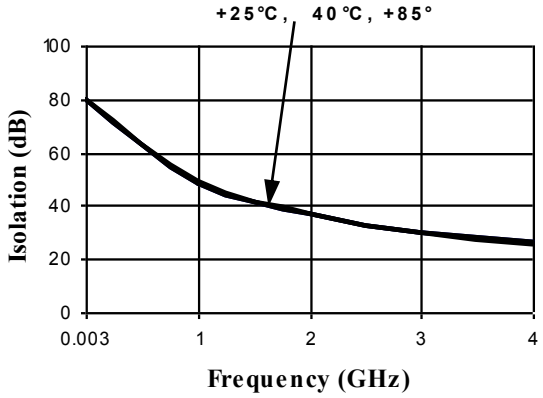

M/A-COM Technology Solutions Inc. (MACOM) and its affiliates reserve the right to make changes to the product(s) or information contained herein without notice.
Visit www.macom.com for additional data sheets and product information.

For further information and support please visit:
https://www.macom.com/support

Lead-Free, QSOP-24†

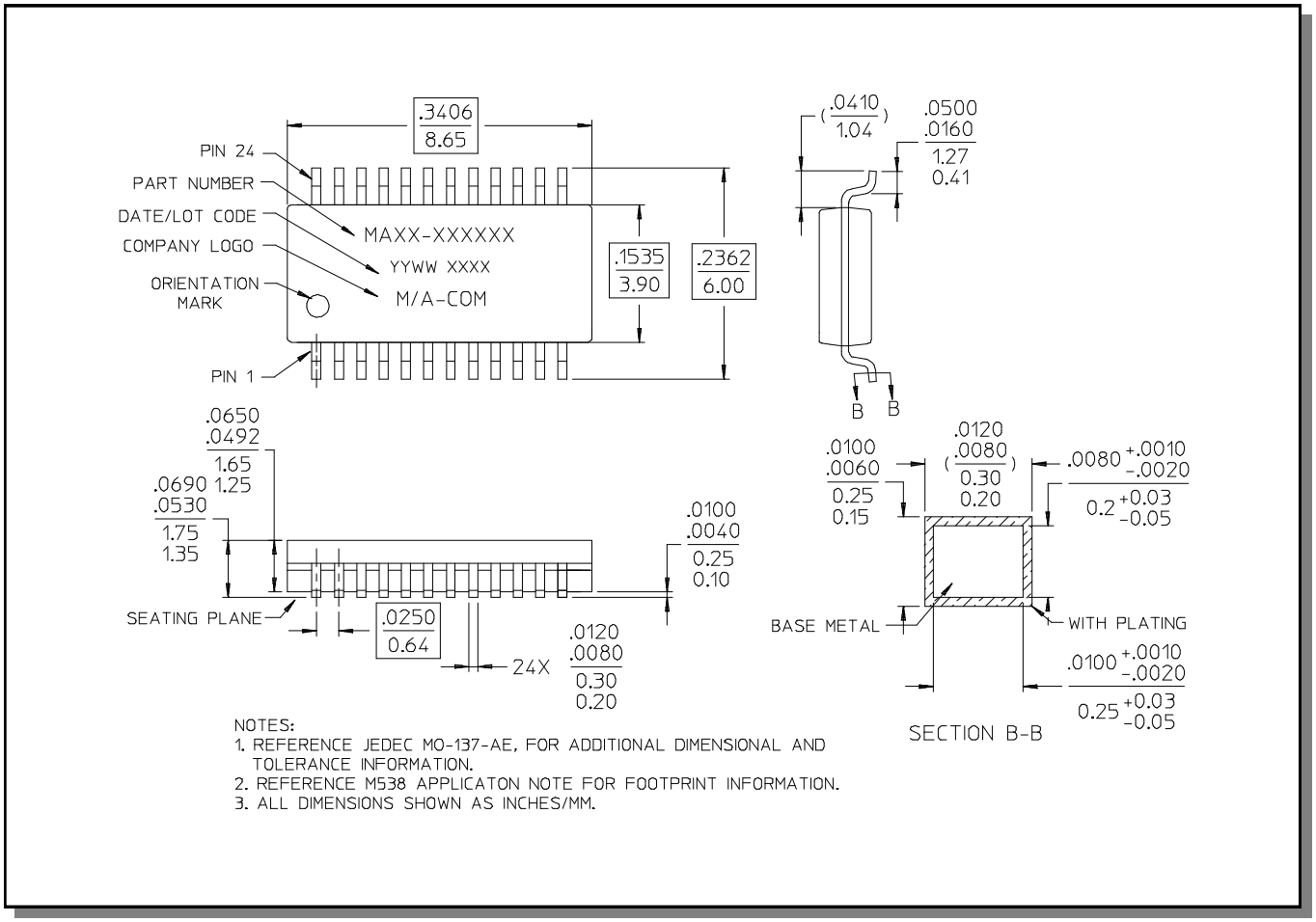

† Reference Application Note M538 for lead-free solder reflow recommendations.

M/A-COM Technology Solutions Inc. (MACOM) and its affiliates reserve the right to make changes to the product(s) or information contained herein without notice.
Visit www.macom.com for additional data sheets and product information.

For further information and support please visit:
https://www.macom.com/support

M/A-COM Technology Solutions Inc. All rights reserved.

Information in this document is provided in connection with M/A-COM Technology Solutions Inc ("MACOM") products. These materials are provided by MACOM as a service to its customers and may be used for informational purposes only. Except as provided in MACOM's Terms and Conditions of Sale for such products or in any separate agreement related to this document, MACOM assumes no liability whatsoever. MACOM assumes no responsibility for errors or omissions in these materials. MACOM may make changes to specifications and product descriptions at any time, without notice. MACOM makes no commitment to update the information and shall have no responsibility whatsoever for conflicts or incompatibilities arising from future changes to its specifications and product descriptions. No license, express or implied, by estoppels or otherwise, to any intellectual property rights is granted by this document.

THESE MATERIALS ARE PROVIDED "AS IS" WITHOUT WARRANTY OF ANY KIND, EITHER EXPRESS OR IMPLIED, RELATING TO SALE AND/OR USE OF MACOM PRODUCTS INCLUDING LIABILITY OR WARRANTIES RELATING TO FITNESS FOR A PARTICULAR PURPOSE, CONSEQUENTIAL OR INCIDENTAL DAMAGES, MERCHANTABILITY, OR INFRINGEMENT OF ANY PATENT, COPYRIGHT OR OTHER INTELLECTUAL PROPERTY RIGHT. MACOM FURTHER DOES NOT WARRANT THE ACCURACY OR COMPLETENESS OF THE INFORMATION, TEXT, GRAPHICS OR OTHER ITEMS CONTAINED WITHIN THESE MATERIALS. MACOM SHALL NOT BE LIABLE FOR ANY SPECIAL, INDIRECT, INCIDENTAL, OR CONSEQUENTIAL DAMAGES, INCLUDING WITHOUT LIMITATION, LOST REVENUES OR LOST PROFITS, WHICH MAY RESULT FROM THE USE OF THESE MATERIALS.

MACOM products are not intended for use in medical, lifesaving or life sustaining applications. MACOM customers using or selling MACOM products for use in such applications do so at their own risk and agree to fully indemnify MACOM for any damages resulting from such improper use or sale.

Looking for pricing, stock, or lifecycle information?

Click below to explore more details on WIN SOURCE:

- View MASWCC0009 on WIN SOURCE
- M/A-Com Technology Solutions Information

Optimize Your Supply Chain with WIN SOURCE Solutions

- Global Sourcing Solution
- Obsolete Management
- Cost Control Management
- Shortage Management
- Alternative Solution
- Excess Inventory Management