THE DATASHEET OF

UC3825DWTRG4

www.win-source.net 0086-755-83957316

Unitrode Products from Texas Instruments

application INFO available

UC1825
UC2825
UC3825

High Speed PWM Controller

FEATURES

- Compatible with Voltage or Current Mode Topologies
- Practical Operation Switching Frequencies to 1MHz
- 50ns Propagation Delay to Output
- High Current Dual Totem Pole Outputs (1.5A Peak)
- Wide Bandwidth Error Amplifier
- Fully Latched Logic with Double Pulse Suppression
- Pulse-by-Pulse Current Limiting
- Soft Start / Max. Duty Cycle Control
- Under-Voltage Lockout with Hysteresis
- Low Start Up Current (1.1mA)

DESCRIPTION

The UC1825 family of PWM control ICs is optimized for high frequency switched mode power supply applications. Particular care was given to minimizing propagation delays through the comparators and logic circuitry while maximizing bandwidth and slew rate of the error amplifier. This controller is designed for use in either current-mode or voltage mode systems with the capability for input voltage feed-forward.

Protection circuitry includes a current limit comparator with a 1V threshold, a TTL compatible shutdown port, and a soft start pin which will double as a maximum duty cycle clamp. The logic is fully latched to provide jitter free operation and prohibit multiple pulses at an output. An under-voltage lockout section with 800mV of hysteresis assures low start up current. During under-voltage lockout, the outputs are high impedance.

These devices feature totem pole outputs designed to source and sink high peak currents from capacitive loads, such as the gate of a power MOSFET. The on state is designed as a high level.

BLOCK DIAGRAM

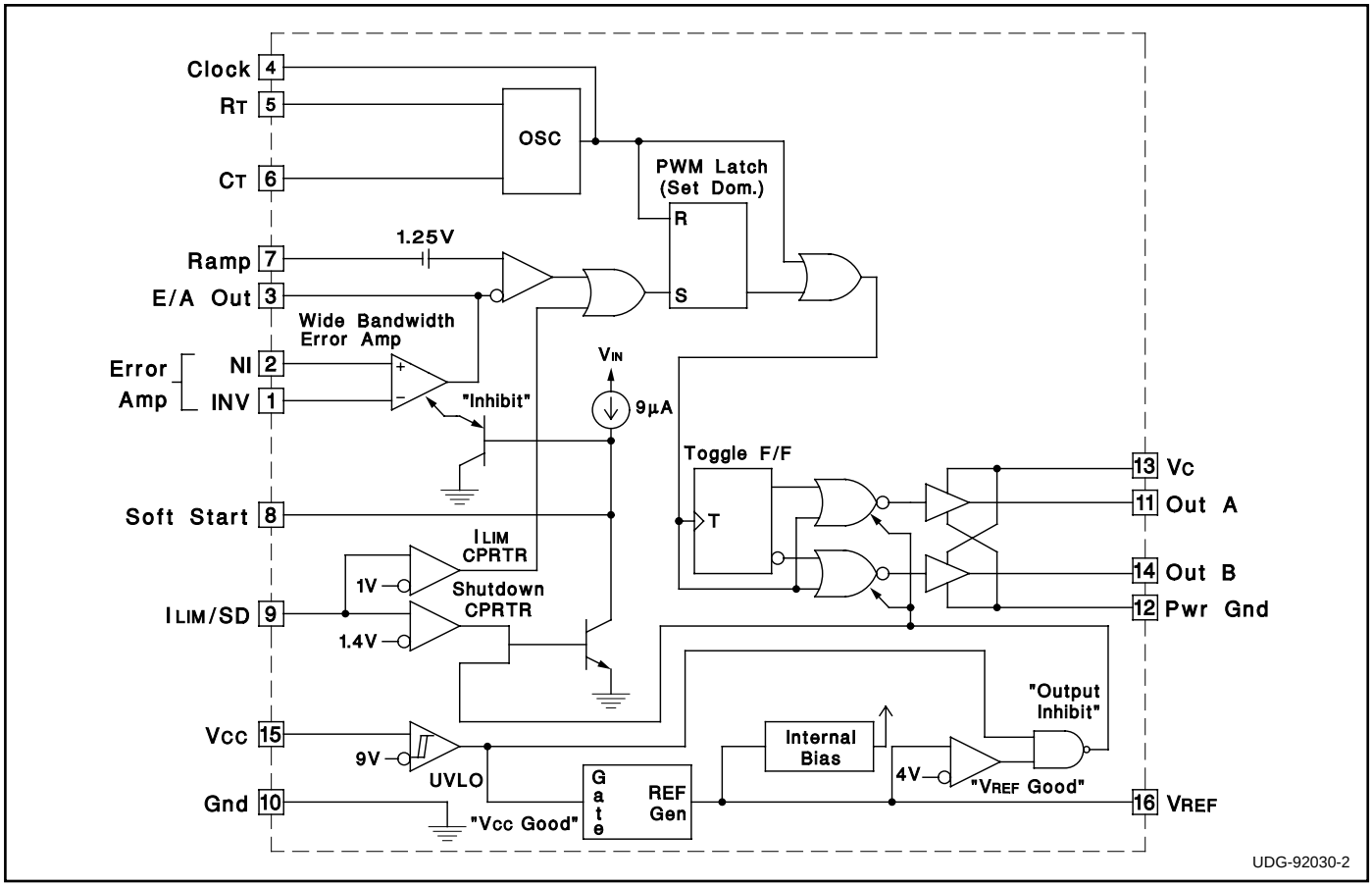

ABSOLUTE MAXIMUM RATINGS (Note 1)

Supply Voltage (Pins 13, 15) 30V
Output Current, Source or Sink (Pins 11, 14)
DC 0.5A
Pulse (0.5 s) 2.0A
Analog Inputs
(Pins 1, 2, 7). . . . . -0.3V to 7V
(Pin 8, 9) . . . . . -0.3V to 6V
Clock Output Current (Pin 4) . . . . . -5mA
Error Amplifier Output Current (Pin 3) 5mA
Soft Start Sink Current (Pin 8) 20mA
Oscillator Charging Current (Pin 5) . . . . . -5mA
Power Dissipation 1W
Storage Temperature Range . . . . . -65°C to +150°C
Lead Temperature (Soldering, 10 seconds) . . . . . 300°C

Note 1: All voltages are with respect to GND (Pin 10); all currents are positive into, negative out of part; pin numbers refer to DIL-16 package.

Note 3: Consult Unitrode Integrated Circuit Databook for thermal limitations and considerations of package.

SOIC-16 (Top View)
DW Package

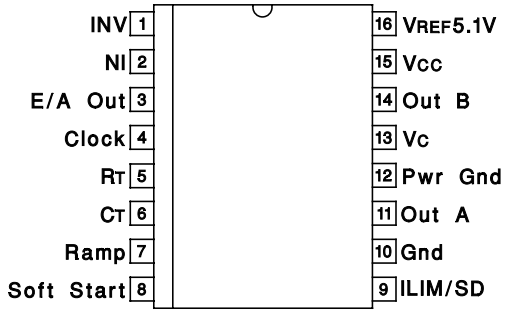

CONNECTION DIAGRAMS

DIL-16 (Top View)
J or N Package

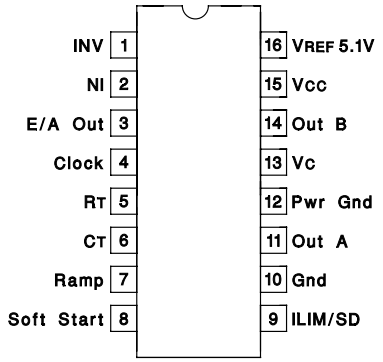

PLCC-20 & LCC-20
(Top View)
Q & L Packages

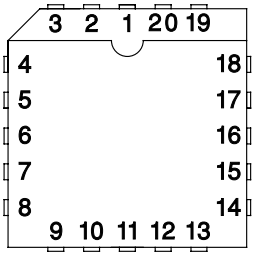

PACKAGE PIN FUNCTION	
FUNCTION	PIN
N/C	1
INV	2
NI	3
E/A Out	4
Clock	5
N/C	6
RT	7
CT	8
Ramp	9
Soft Start	10
N/C	11
ILIM/SD	12
Gnd	13
Out A	14
Pwr Gnd	15
N/C	16
VC	17
Out B	18
VCC	19
VREF 5.1V	20

THERMAL RATINGS TABLE

Package	Θ_{JA}	Θ_{JC}
DIL-16J	80-120	28(2)
DIL-16N	90(1)	45
PLCC-20	43-75(1)	34
LCC-20	70-80	20(2)
SOIC-16	50-120(1)	35

(1) Specified Θ_{JA} (junction to ambient) is for devices mounted to 5in^2 FR4 PC board with one ounce copper where noted. When resistance range is given, lower values are for 5in^2 aluminum PC board. Test PWB was 0.062in thick and typically used 0.635mm trace widths for power packages and 1.3mm trace widths for non-power packages with 100 x 100 mil probe land area at the end of each trace.

(2) Θ_{JC} data values stated were derived from MIL-STD-1835B. MIL-STD-1835B states that the baseline values shown are worst case (mean +2s) for a 60 x 60mil microcircuit device silicon die and applicable for devices with die sizes up to 14400 square mils. For device die sizes greater than 14400 square mils use the following values; dual-in-line, 11°C/W; flat pack 10°C/W; pin grid array, 10°C/W.

ELECTRICAL CHARACTERISTICS: Unless otherwise stated, these specifications apply for , R_T = 3.65k, C_T = 1nF, V_{CC} = 15V, -55°C<T_A<125°C for the UC1825, –40°C<T_A<85°C for the UC2825, and 0°C<T_A<70°C for the UC3825, T_A=T_O.

PARAMETERS	TEST CONDITIONS	UC1825 UC2825			UC3825			
		MIN	TOP	MAX	MIN	TOP	MAX	UNITS
Reference Section								
Output Voltage	T_O = 25°C, I_O = 1mA	5.05	5.10	5.15	5.00	5.10	5.20	V
Line Regulation	10V < V_{CC} < 30V		2	20		2	20	mV
Load Regulation	1mA < I_O < 10mA		5	20		5	20	mV
Temperature Stability*	T_{MIN} < T_A < T_{MAX}		0.2	0.4		0.2	0.4	mV/°C
Total Output Variation*	Line, Load, Temperature	5.00		5.20	4.95		5.25	V
Output Noise Voltage*	10Hz < f < 10kHz		50			50		µV
Long Term Stability*	T_J = 125°C, 1000hrs.		5	25		5	25	mV
Short Circuit Current	V_{REF} = 0V	-15	-50	-100	-15	-50	-100	mA
Oscillator Section								
Initial Accuracy*	T_J = 2°C	360	400	440	360	400	440	kHz
Voltage Stability*	10V < V_{CC} < 30V		0.2	2		0.2	2	%
Temperature Stability*	T_{MIN} < T_A < T_{MAX}		5			5		%
Total Variation*	Line, Temperature	340		460	340		460	kHz
Oscillator Section (cont.)								
Clock Out High		3.9	4.5		3.9	4.5		V
Clock Out Low			2.3	2.9		2.3	2.9	V
Ramp Peak*		2.6	2.8	3.0	2.6	2.8	3.0	V
Ramp Valley*		0.7	1.0	1.25	0.7	1.0	1.25	V
Ramp Valley to Peak*		1.6	1.8	2.0	1.6	1.8	2.0	V
Error Amplifier Section								
Input Offset Voltage				10			15	mV
Input Bias Current			0.6	3		0.6	3	µA
Input Offset Current			0.1	1		0.1	1	µA
Open Loop Gain	1V < V_O < 4V	60	95		60	95		dB
CMRR	1.5V < V_{CM} < 5.5V	75	95		75	95		dB
PSRR	10V < V_{CC} < 30V	85	110		85	110		dB
Output Sink Current	$V_{PIN\ 3}$ = 1V	1	2.5		1	2.5		mA
Output Source Current	$V_{PIN\ 3}$ = 4V	-0.5	-1.3		-0.5	-1.3		mA
Output High Voltage	$I_{PIN\ 3}$ = -0.5mA	4.0	4.7	5.0	4.0	4.7	5.0	V
Output Low Voltage	$I_{PIN\ 3}$ = 1mA	0	0 .5	1.0	0	0.5	1.0	V
Unity Gain Bandwidth*		3	5.5		3	5.5		MHz
Slew Rate*		6	12		6	12		V/µs

ELECTRICAL CHARACTERISTICS: Unless otherwise stated, these specifications apply for , R_T = 3.65k, C_T = 1nF, V_{CC} = 15V, -55°C<T_A<125°C for the UC1825, –40°C<T_A<85°C for the UC2825, and 0°C<T_A<70°C for the UC3825, T_A=T_J.

PARAMETERS	TEST CONDITIONS	UC1825 UC2825			UC3825			
		MIN	TOP	MAX	MIN	TOP	MAX	UNITS
PWM Comparator Section								
Pin 7 Bias Current	$V_{PIN\ 7}$ = 0V		-1	-5		-1	-5	µA
Duty Cycle Range		0		80	0		85	%
Pin 3 Zero DC Threshold	$V_{PIN\ 7}$ = 0V	1.1	1.25		1.1	1.25		V
Delay to Output*			50	80		50	80	ns
Soft-Start Section								
Charge Current	$V_{PIN\ 8}$ = 0.5V	3	9	20	3	9	20	µA
Discharge Current	$V_{PIN\ 8}$ = 1V	1			1			mA
Current Limit / Shutdown Section								
Pin 9 Bias Current	0 < $V_{PIN\ 9}$ < 4V			15			10	µA
Current Limit Threshold		0.9	1.0	1.1	0.9	1.0	1.1	V
Shutdown Threshold		1.25	1.40	1.55	1.25	1.40	1.55	V
Delay to Output			50	80		50	80	ns
Output Section								
Output Low Level	I_{OUT} = 20mA		0.25	0.40		0.25	0.40	V
	I_{OUT} = 200mA		1.2	2.2		1.2	2.2	V
Output High Level	I_{OUT} = -20mA	13.0	13.5		13.0	13.5		V
	I_{OUT} = -200mA	12.0	13.0		12.0	13.0		V
Collector Leakage	V_C = 30V		100	500		10	500	µA
Rise/Fall Time*	CL = 1nF		30	60		30	60	ns
Under-Voltage Lockout Section								
Start Threshold		8.8	9.2	9.6	8.8	9.2	9.6	V
UVLO Hysteresis		0.4	0.8	1.2	0.4	0.8	1.2	V
Supply Current Section								
Start Up Current	V_{CC} = 8V		1.1	2.5		1.1	2.5	mA
ICC	$V_{PIN\ 1}$, $V_{PIN\ 7}$, $V_{PIN\ 9}$ = 0V; $V_{PIN\ 2}$ = 1V		22	33		22	33	mA

* This parameter not 100% tested in production but guaranteed by design.

Printed Circuit Board Layout Considerations

High speed circuits demand careful attention to layout and component placement. To assure proper performance of the UC1825 follow these rules: 1) Use a ground plane. 2) Damp or clamp parasitic inductive kick energy from the gate of driven MOSFETs. Do not allow the output pins to ring below ground. A series gate resistor or a shunt 1 Amp Schottky diode at the output pin will serve this purpose. 3) Bypass V_{CC}, V_C, and V_{REF}. Use 0.1µF monolithic ceramic capacitors with low equivalent series inductance. Allow less than 1 cm of total lead length for each capacitor between the bypassed pin and the ground plane. 4) Treat the timing capacitor, CT, like a bypass capacitor.

Error Amplifier Circuit

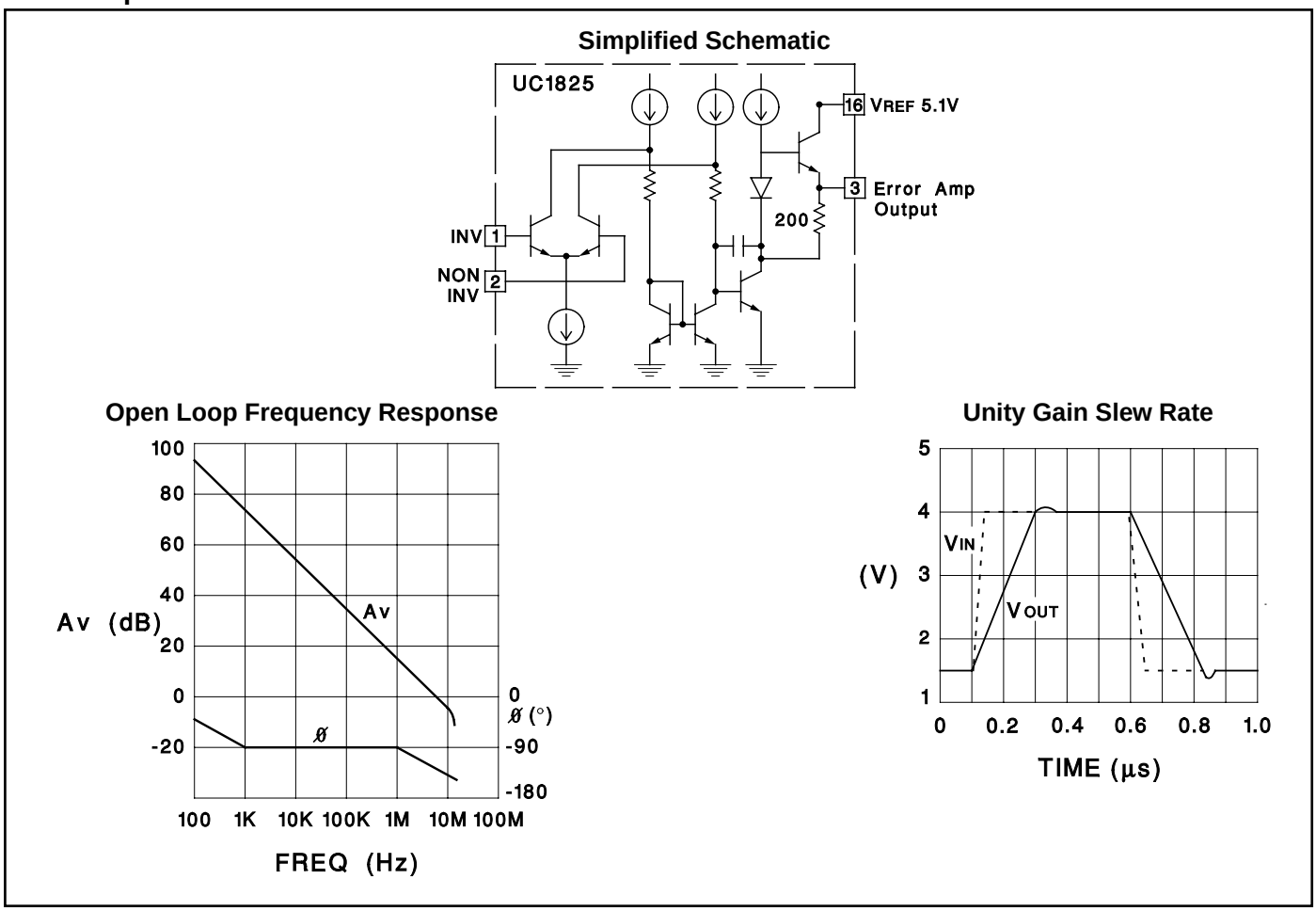

PWM Applications

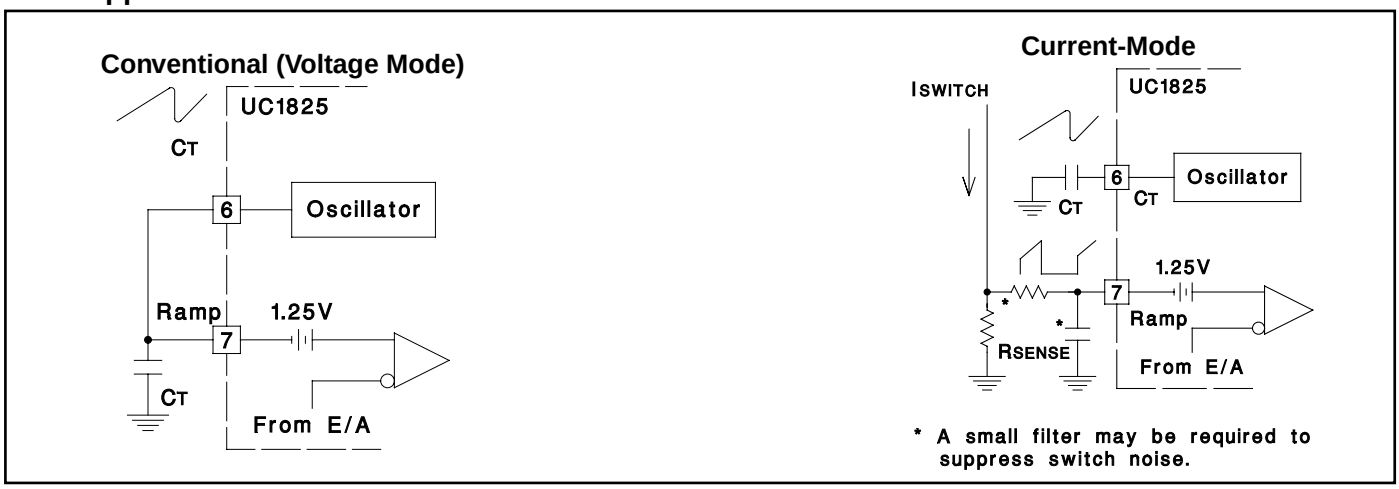

Oscillator Circuit

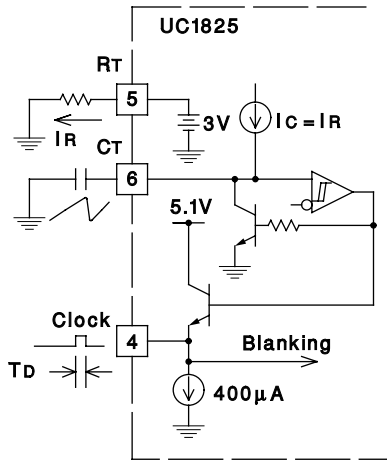

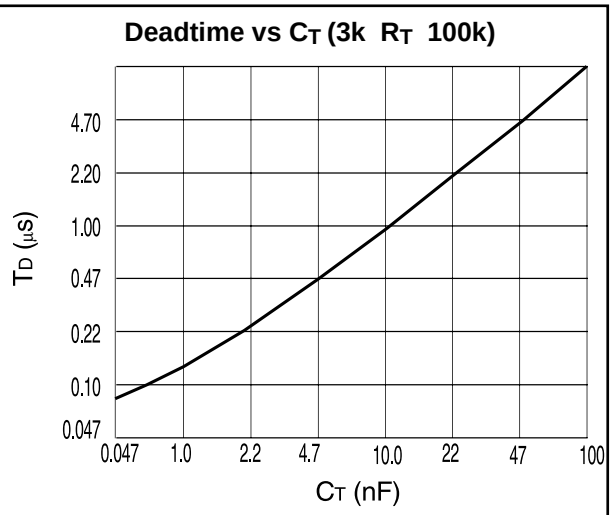

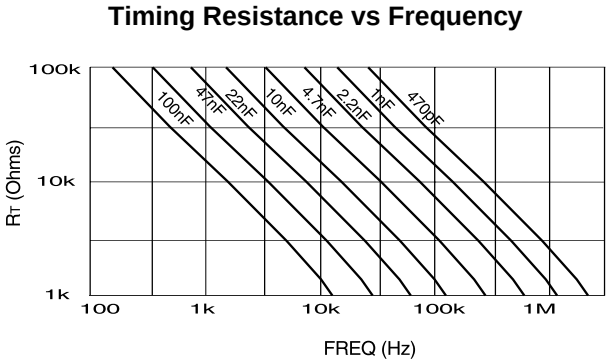

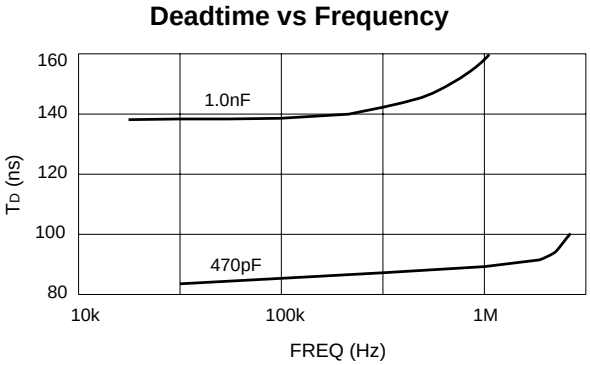

Synchronized Operation

Two Units in Close Proximity

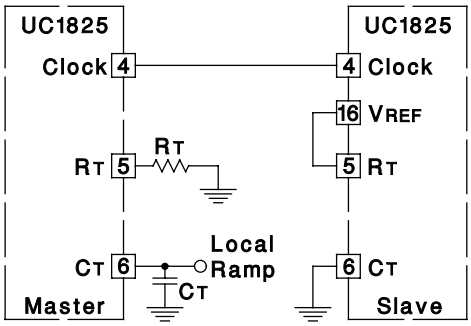

Generalized Synchronization

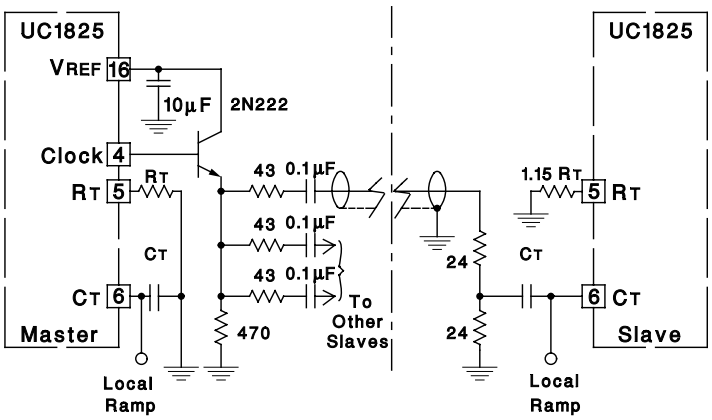

Forward Technique for Off-Line Voltage Mode Application

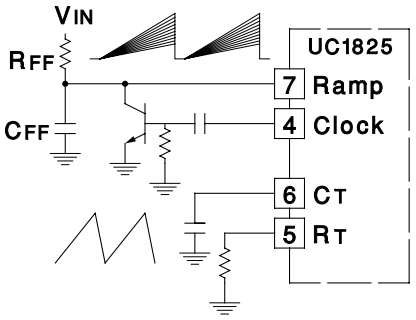

Constant Volt-Second Clamp Circuit

The circuit shown here will achieve a constant volt-second product clamp over varying input voltages. The ramp generator components, R_T and C_R are chosen so that the ramp at Pin 9 crosses the 1V threshold at the same time the desired maximum volt-second product is reached. The delay through the functional nor block must be such that the ramp capacitor can be completely discharged during the minimum deadtime.

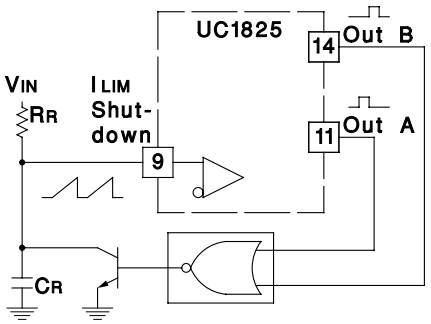

Output Section

Simplified Schematic

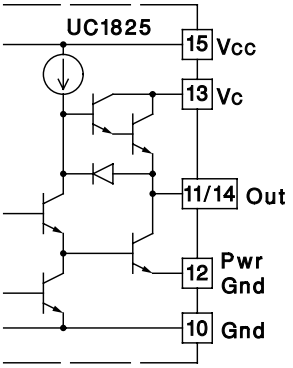

Rise/Fall Time (C_L=1nF)

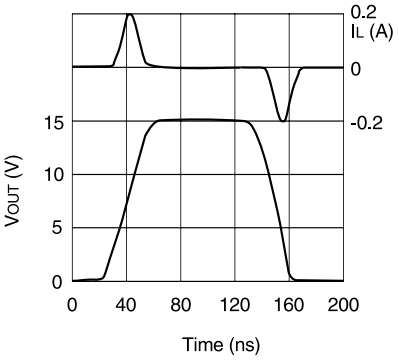

Rise/Fall Time (C_L=10nF)

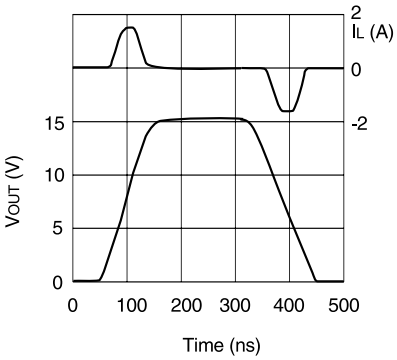

Saturation Curves

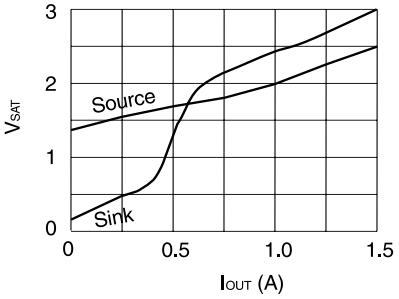

Open Loop Laboratory Test Fixture

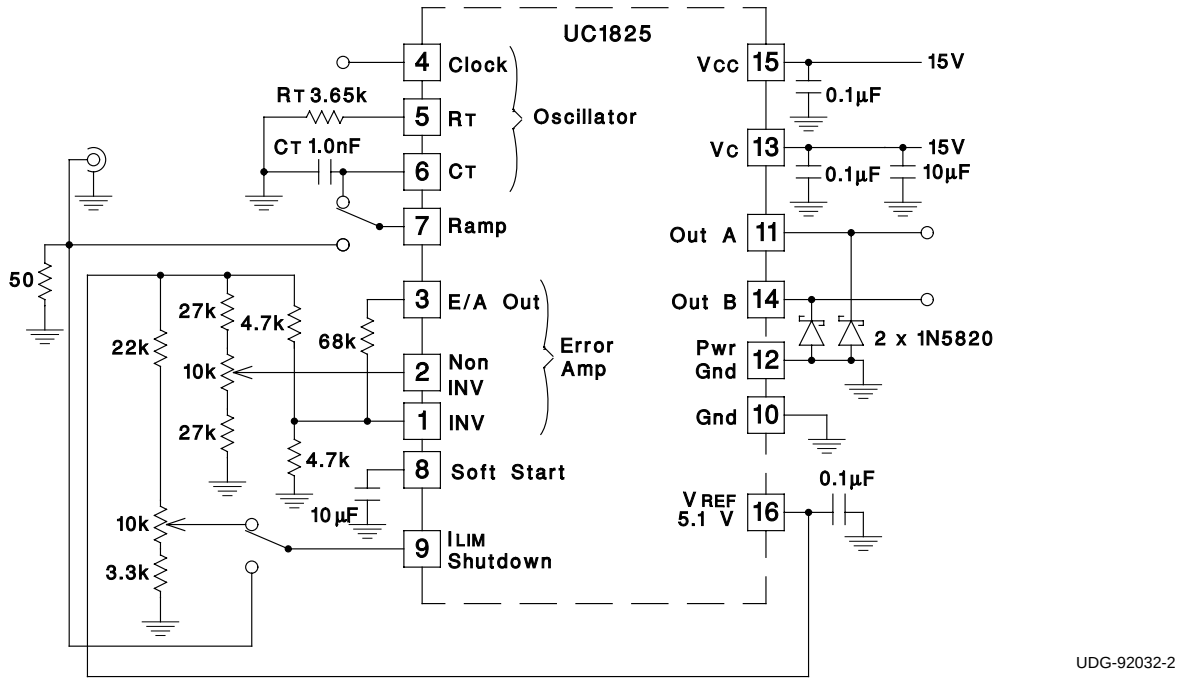

This test fixture is useful for exercising many of the UC1825's functions and measuring their specifications.

As with any wideband circuit, careful grounding and by-pass procedures should be followed. The use of a ground plane is highly recommended.

Design Example: 50W, 48V to 5V DC to DC Converter - 1.5MHz Clock Frequency

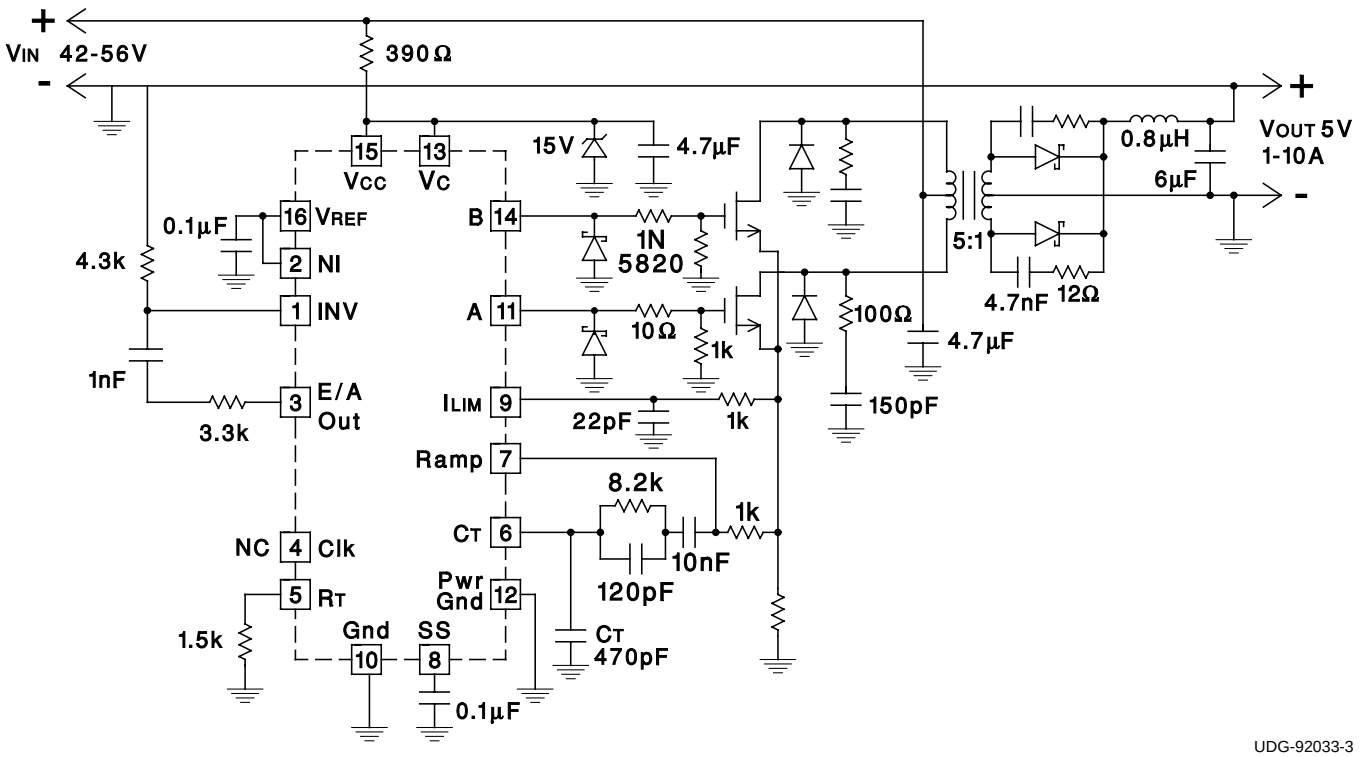

PACKAGING INFORMATION

Orderable Device	Status (1)	Package Type	Package Drawing	Pins	Package Qty	Eco Plan (2)	Lead/Ball Finish (6)	MSL Peak Temp (3)	Op Temp (°C)	Device Marking (4/5)	Samples
5962-87681012A	ACTIVE	LCCC	FK	20	1	TBD	POST-PLATE	N / A for Pkg Type	-55 to 125	5962-87681012A UC1825L/883B	Samples
5962-8768101EA	ACTIVE	CDIP	J	16	1	TBD	A42	N / A for Pkg Type	-55 to 125	5962-8768101EA UC1825J/883B	Samples
5962-8768101QFA	ACTIVE	CFP	W	16	1	TBD	A42	N / A for Pkg Type	-55 to 125	5962-8768101QFA UC1825W/883B	Samples
UC1825J	ACTIVE	CDIP	J	16	1	TBD	A42	N / A for Pkg Type	-55 to 125	UC1825J	Samples
UC1825J883B	ACTIVE	CDIP	J	16	1	TBD	A42	N / A for Pkg Type	-55 to 125	5962-8768101EA UC1825J/883B	Samples
UC1825L	ACTIVE	LCCC	FK	20	1	TBD	POST-PLATE	N / A for Pkg Type	-55 to 125	UC1825L	Samples
UC1825L883B	ACTIVE	LCCC	FK	20	1	TBD	POST-PLATE	N / A for Pkg Type	-55 to 125	5962-87681012A UC1825L/883B	Samples
UC1825W883B	ACTIVE	CFP	W	16	1	TBD	A42	N / A for Pkg Type	-55 to 125	5962-8768101QFA UC1825W/883B	Samples
UC2825DW	ACTIVE	SOIC	DW	16	40	Green (RoHS & no Sb/Br)	CU NIPDAU	Level-2-260C-1 YEAR	-40 to 85	UC2825DW	Samples
UC2825DWG4	ACTIVE	SOIC	DW	16	40	Green (RoHS & no Sb/Br)	CU NIPDAU	Level-2-260C-1 YEAR	-40 to 85	UC2825DW	Samples
UC2825DWTR	ACTIVE	SOIC	DW	16	2000	Green (RoHS & no Sb/Br)	CU NIPDAU	Level-2-260C-1 YEAR	-40 to 85	UC2825DW	Samples
UC2825J	ACTIVE	CDIP	J	16	1	TBD	A42	N / A for Pkg Type	-40 to 85	UC2825J	Samples
UC2825N	ACTIVE	PDIP	N	16	25	Green (RoHS & no Sb/Br)	CU NIPDAU	N / A for Pkg Type	-40 to 85	UC2825N	Samples
UC2825NG4	ACTIVE	PDIP	N	16	25	Green (RoHS & no Sb/Br)	CU NIPDAU	N / A for Pkg Type	-40 to 85	UC2825N	Samples
UC3825DW	ACTIVE	SOIC	DW	16	40	Green (RoHS & no Sb/Br)	CU NIPDAU	Level-2-260C-1 YEAR	0 to 70	UC3825DW	Samples

Orderable Device	Status (1)	Package Type	Package Drawing	Pins	Package Qty	Eco Plan (2)	Lead/Ball Finish (6)	MSL Peak Temp (3)	Op Temp (°C)	Device Marking (4/5)	Samples
UC3825DWG4	ACTIVE	SOIC	DW	16	40	Green (RoHS & no Sb/Br)	CU NIPDAU	Level-2-260C-1 YEAR	0 to 70	UC3825DW	Samples
UC3825DWTR	ACTIVE	SOIC	DW	16	2000	Green (RoHS & no Sb/Br)	CU NIPDAU	Level-2-260C-1 YEAR	0 to 70	UC3825DW	Samples
UC3825N	ACTIVE	PDIP	N	16	25	Green (RoHS & no Sb/Br)	CU NIPDAU	N / A for Pkg Type	0 to 70	UC3825N	Samples
UC3825NG4	ACTIVE	PDIP	N	16	25	Green (RoHS & no Sb/Br)	CU NIPDAU	N / A for Pkg Type	0 to 70	UC3825N	Samples

(1) The marketing status values are defined as follows:
ACTIVE: Product device recommended for new designs.
LIFEBUY: TI has announced that the device will be discontinued, and a lifetime-buy period is in effect.
NRND: Not recommended for new designs. Device is in production to support existing customers, but TI does not recommend using this part in a new design.
PREVIEW: Device has been announced but is not in production. Samples may or may not be available.
OBSOLETE: TI has discontinued the production of the device.

(2) **RoHS:** TI defines "RoHS" to mean semiconductor products that are compliant with the current EU RoHS requirements for all 10 RoHS substances, including the requirement that RoHS substance do not exceed 0.1% by weight in homogeneous materials. Where designed to be soldered at high temperatures, "RoHS" products are suitable for use in specified lead-free processes. TI may reference these types of products as "Pb-Free".
RoHS Exempt: TI defines "RoHS Exempt" to mean products that contain lead but are compliant with EU RoHS pursuant to a specific EU RoHS exemption.
Green: TI defines "Green" to mean the content of Chlorine (Cl) and Bromine (Br) based flame retardants meet JS709B low halogen requirements of <=1000ppm threshold. Antimony trioxide based flame retardants must also meet the <=1000ppm threshold requirement.

(3) MSL, Peak Temp. - The Moisture Sensitivity Level rating according to the JEDEC industry standard classifications, and peak solder temperature.

(4) There may be additional marking, which relates to the logo, the lot trace code information, or the environmental category on the device.

(5) Multiple Device Markings will be inside parentheses. Only one Device Marking contained in parentheses and separated by a "~" will appear on a device. If a line is indented then it is a continuation of the previous line and the two combined represent the entire Device Marking for that device.

(6) Lead/Ball Finish - Orderable Devices may have multiple material finish options. Finish options are separated by a vertical ruled line. Lead/Ball Finish values may wrap to two lines if the finish value exceeds the maximum column width.

Important Information and Disclaimer: The information provided on this page represents TI's knowledge and belief as of the date that it is provided. TI bases its knowledge and belief on information provided by third parties, and makes no representation or warranty as to the accuracy of such information. Efforts are underway to better integrate information from third parties. TI has taken and continues to take reasonable steps to provide representative and accurate information but may not have conducted destructive testing or chemical analysis on incoming materials and chemicals. TI and TI suppliers consider certain information to be proprietary, and thus CAS numbers and other limited information may not be available for release.

In no event shall TI's liability arising out of such information exceed the total purchase price of the TI part(s) at issue in this document sold by TI to Customer on an annual basis.

OTHER QUALIFIED VERSIONS OF UC1825, UC2825, UC2825M, UC3825 :

- Catalog: UC3825, UC2825
- Military: UC2825M, UC1825
- Space: UC1825-SP

NOTE: Qualified Version Definitions:

- Catalog - TI's standard catalog product
- Military - QML certified for Military and Defense Applications
- Space - Radiation tolerant, ceramic packaging and qualified for use in Space-based application

GENERIC PACKAGE VIEW

DW 16

SOIC - 2.65 mm max height

7.5 x 10.3, 1.27 mm pitch

SMALL OUTLINE INTEGRATED CIRCUIT

This image is a representation of the package family, actual package may vary.
Refer to the product data sheet for package details.

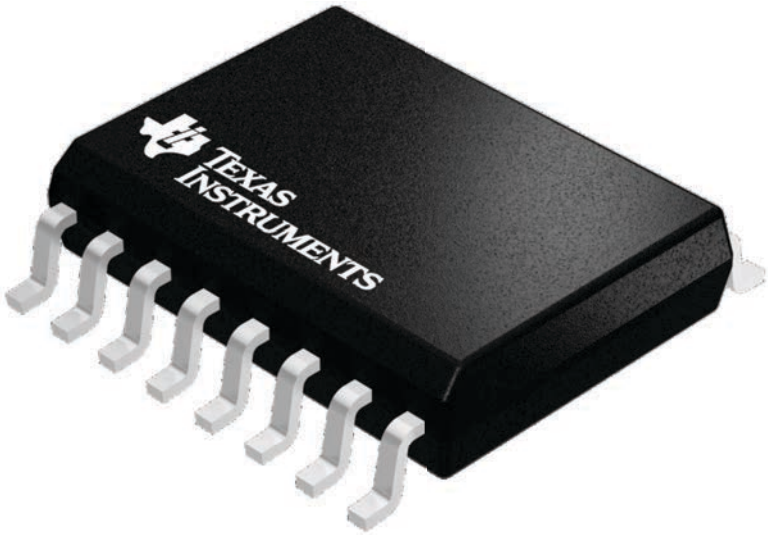

4224780/A

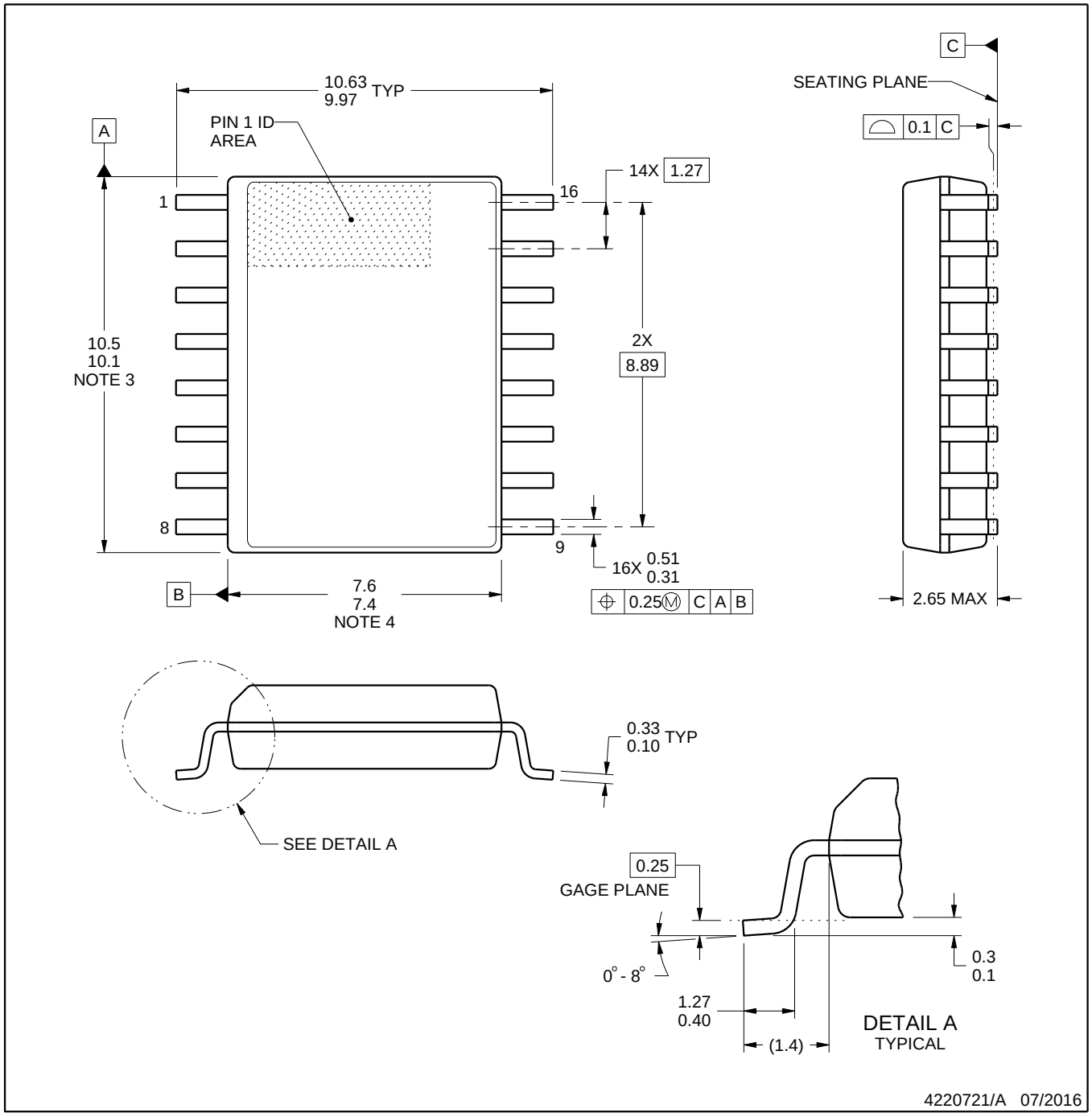

NOTES:

1. All linear dimensions are in millimeters. Dimensions in parenthesis are for reference only. Dimensioning and tolerancing per ASME Y14.5M.
2. This drawing is subject to change without notice.
3. This dimension does not include mold flash, protrusions, or gate burrs. Mold flash, protrusions, or gate burrs shall not exceed 0.15 mm, per side.
4. This dimension does not include interlead flash. Interlead flash shall not exceed 0.25 mm, per side.
5. Reference JEDEC registration MS-013.

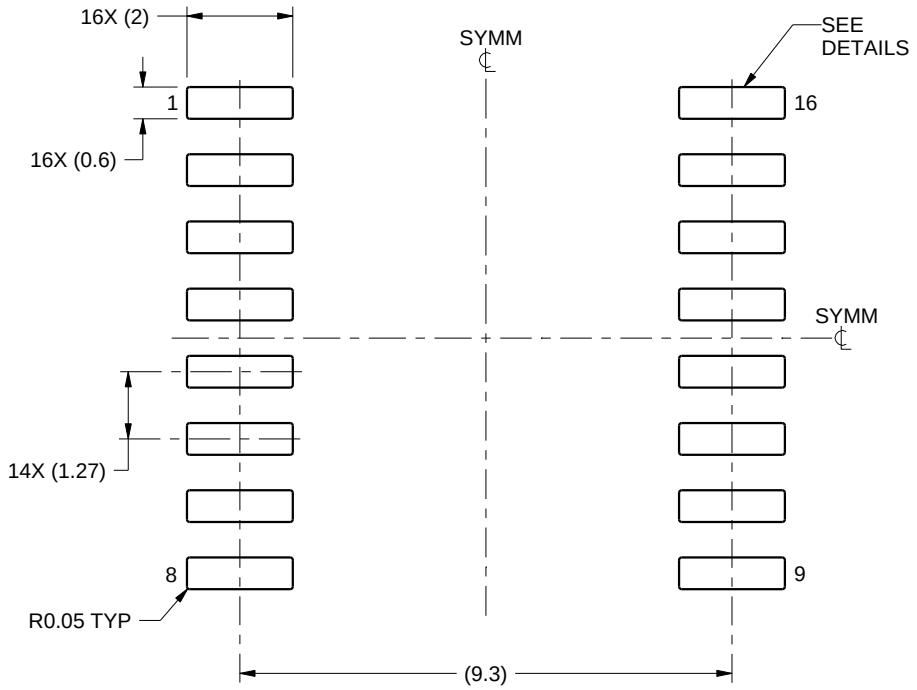

LAND PATTERN EXAMPLE
SCALE:7X

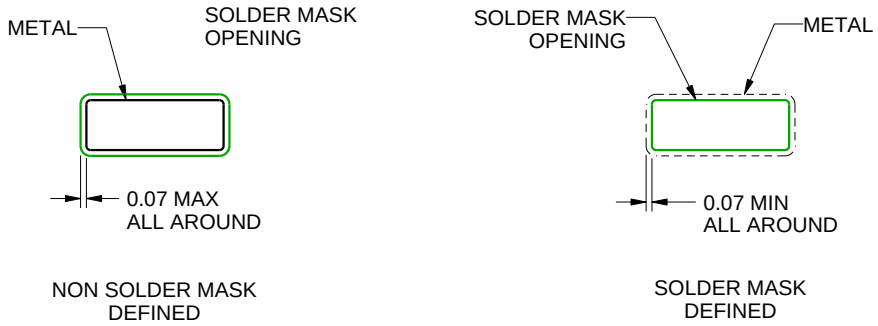

SOLDER MASK DETAILS

4220721/A 07/2016

NOTES: (continued)

6. Publication IPC-7351 may have alternate designs.
7. Solder mask tolerances between and around signal pads can vary based on board fabrication site.

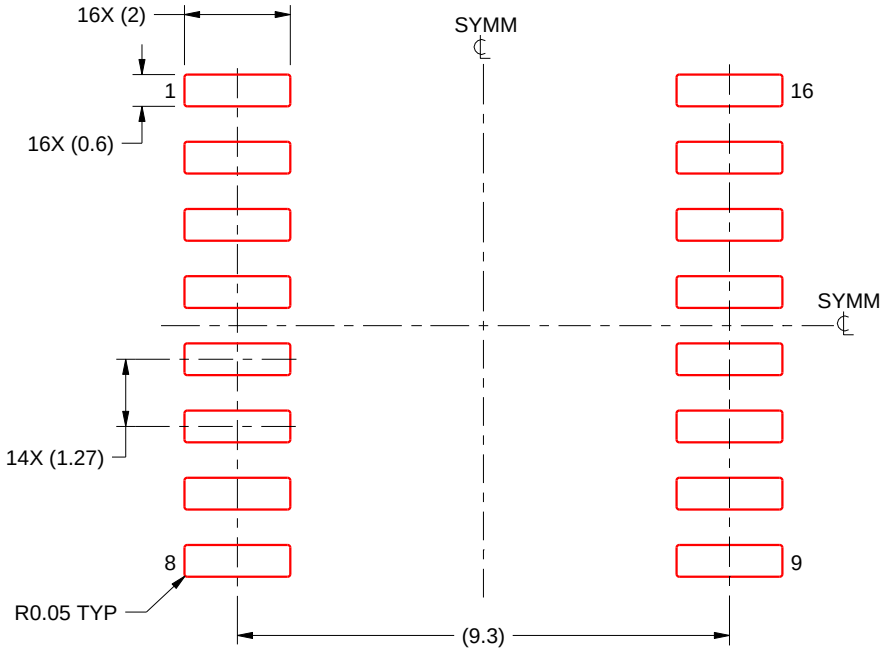

SOLDER PASTE EXAMPLE
BASED ON 0.125 mm THICK STENCIL
SCALE:7X

4220721/A 07/2016

NOTES: (continued)

8. Laser cutting apertures with trapezoidal walls and rounded corners may offer better paste release. IPC-7525 may have alternate design recommendations.
9. Board assembly site may have different recommendations for stencil design.

W (R–GDFP–F16) CERAMIC DUAL FLATPACK

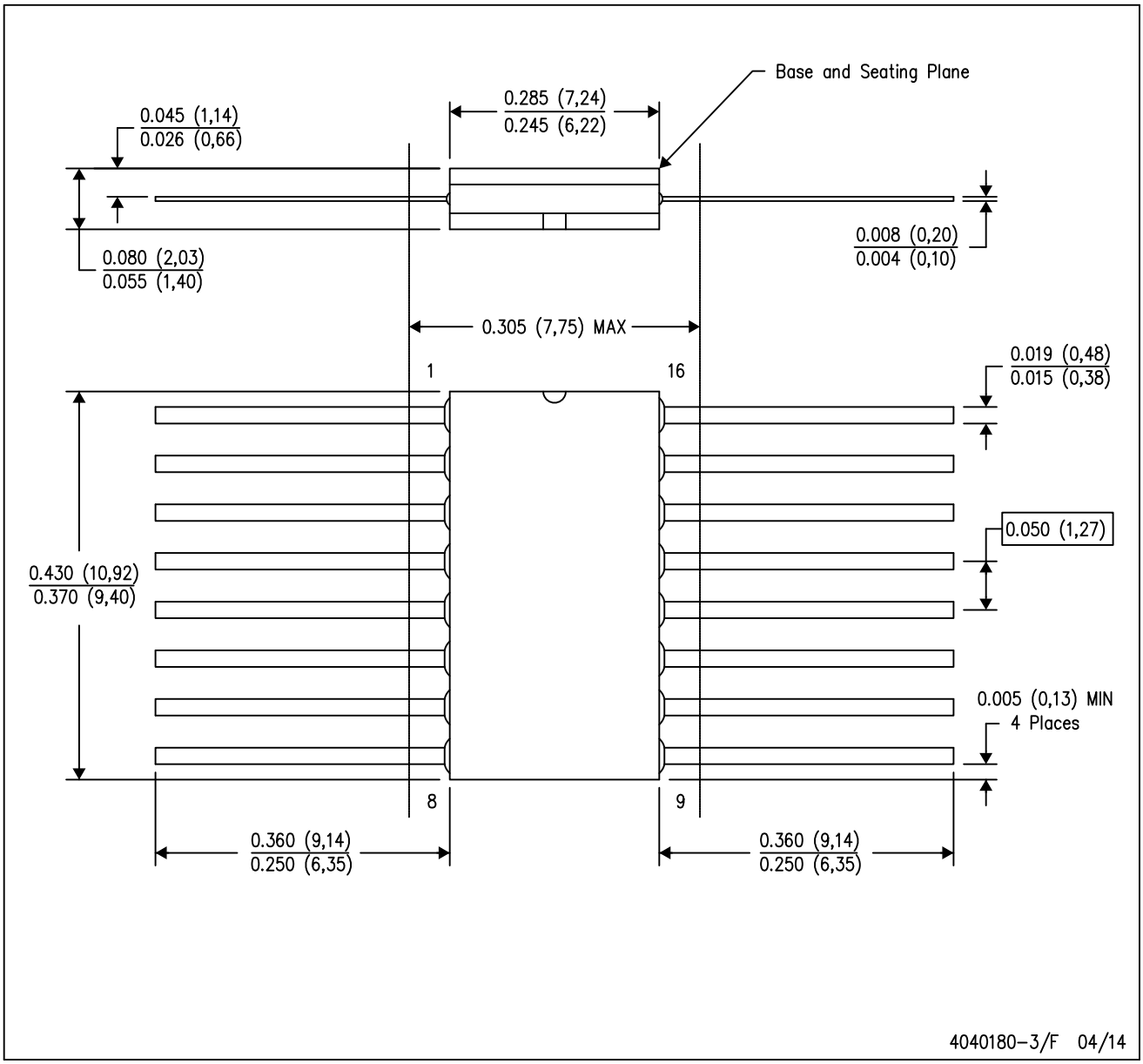

NOTES:
A. All linear dimensions are in inches (millimeters).
B. This drawing is subject to change without notice.
C. This package can be hermetically sealed with a ceramic lid using glass frit.
D. Index point is provided on cap for terminal identification only.
E. Falls within MIL STD 1835 GDFP2–F16

J (R–GDIP–T**) CERAMIC DUAL IN–LINE PACKAGE

14 LEADS SHOWN

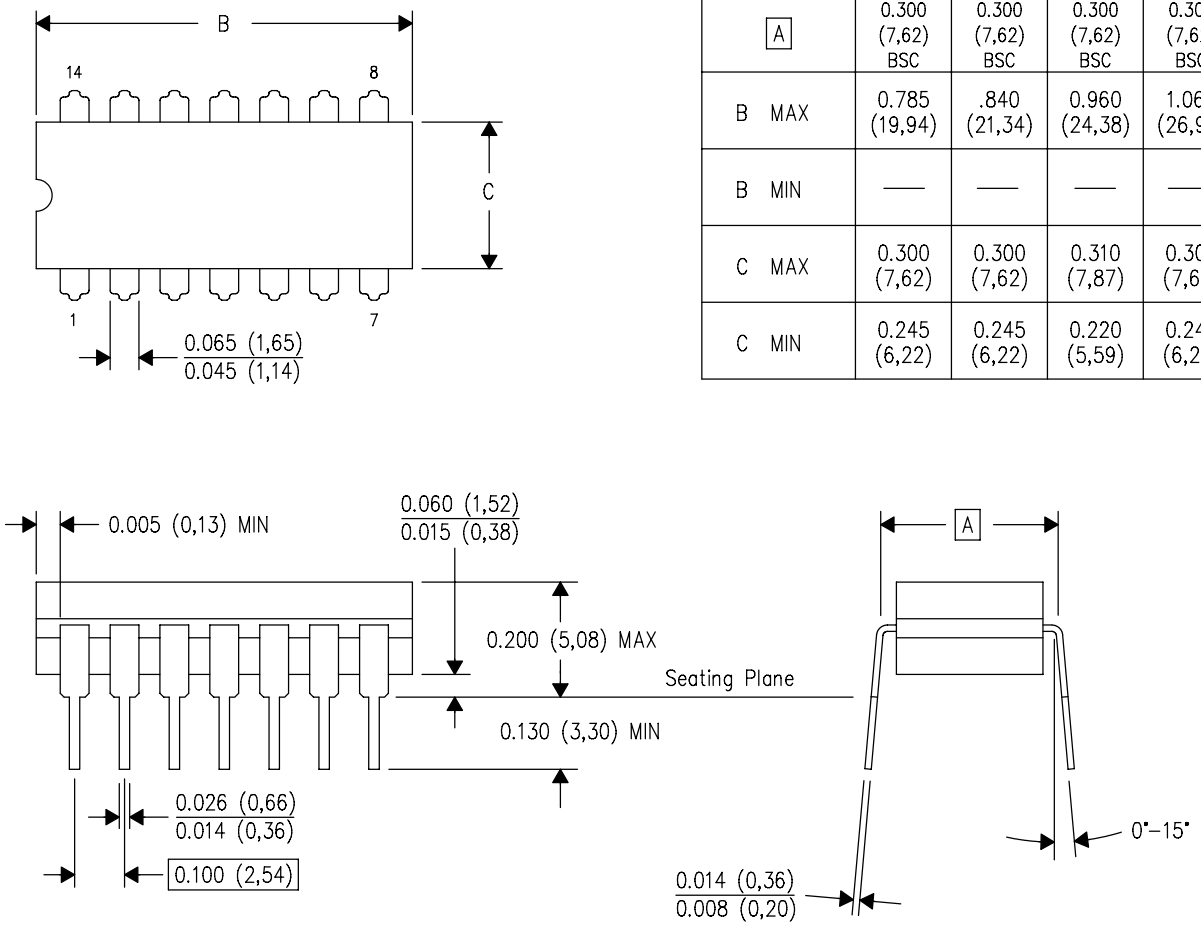

DIM \ PINS **	14	16	18	20
A	0.300 (7,62) BSC	0.300 (7,62) BSC	0.300 (7,62) BSC	0.300 (7,62) BSC
B MAX	0.785 (19,94)	.840 (21,34)	0.960 (24,38)	1.060 (26,92)
B MIN	—	—	—	—
C MAX	0.300 (7,62)	0.300 (7,62)	0.310 (7,87)	0.300 (7,62)
C MIN	0.245 (6,22)	0.245 (6,22)	0.220 (5,59)	0.245 (6,22)

4040083/F 03/03

NOTES:
- A. All linear dimensions are in inches (millimeters).
- B. This drawing is subject to change without notice.
- C. This package is hermetically sealed with a ceramic lid using glass frit.
- D. Index point is provided on cap for terminal identification only on press ceramic glass frit seal only.
- E. Falls within MIL STD 1835 GDIP1–T14, GDIP1–T16, GDIP1–T18 and GDIP1–T20.

N (R–PDIP–T**) PLASTIC DUAL–IN–LINE PACKAGE

16 PINS SHOWN

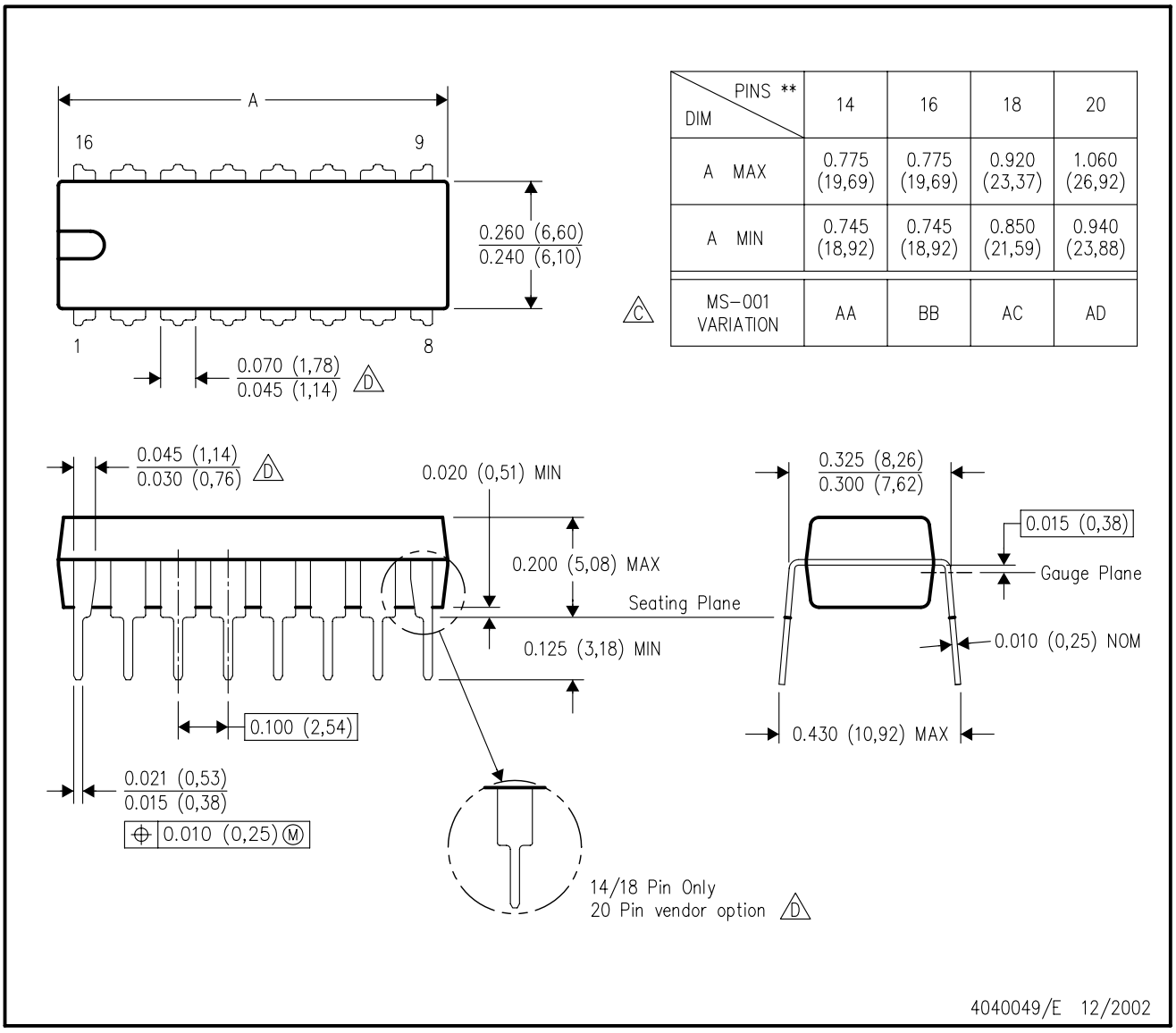

DIM \ PINS **	14	16	18	20
A MAX	0.775 (19,69)	0.775 (19,69)	0.920 (23,37)	1.060 (26,92)
A MIN	0.745 (18,92)	0.745 (18,92)	0.850 (21,59)	0.940 (23,88)
MS–001 VARIATION (C)	AA	BB	AC	AD

NOTES:
A. All linear dimensions are in inches (millimeters).
B. This drawing is subject to change without notice.
C. Falls within JEDEC MS–001, except 18 and 20 pin minimum body length (Dim A).
D. The 20 pin end lead shoulder width is a vendor option, either half or full width.

FK (S–CQCC–N**) LEADLESS CERAMIC CHIP CARRIER

28 TERMINAL SHOWN

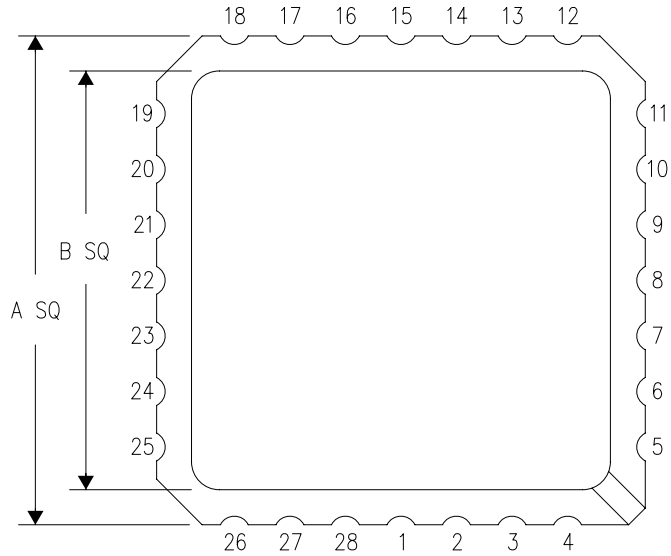

NO. OF TERMINALS **	A		B	
	MIN	MAX	MIN	MAX
20	0.342 (8,69)	0.358 (9,09)	0.307 (7,80)	0.358 (9,09)
28	0.442 (11,23)	0.458 (11,63)	0.406 (10,31)	0.458 (11,63)
44	0.640 (16,26)	0.660 (16,76)	0.495 (12,58)	0.560 (14,22)
52	0.740 (18,78)	0.761 (19,32)	0.495 (12,58)	0.560 (14,22)
68	0.938 (23,83)	0.962 (24,43)	0.850 (21,6)	0.858 (21,8)
84	1.141 (28,99)	1.165 (29,59)	1.047 (26,6)	1.063 (27,0)

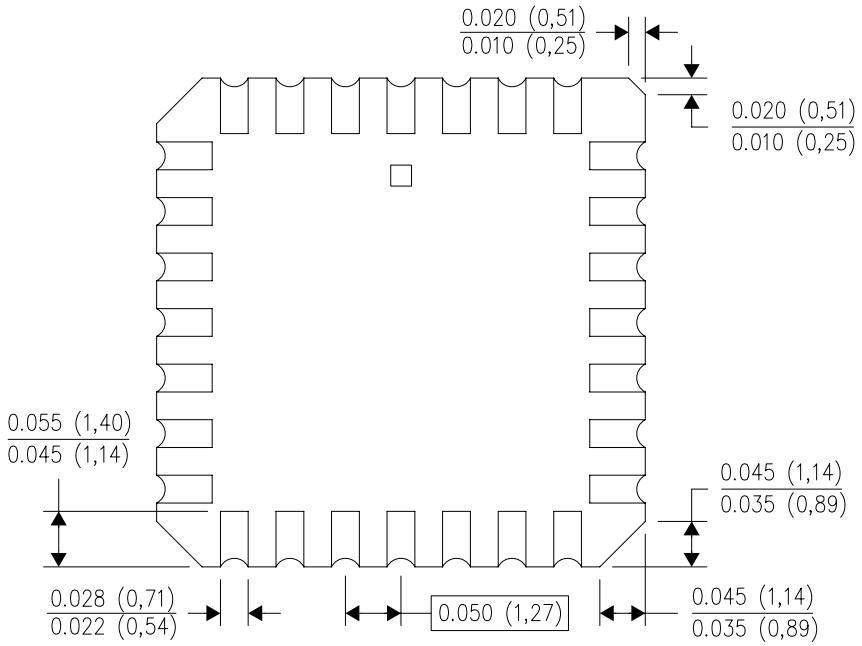

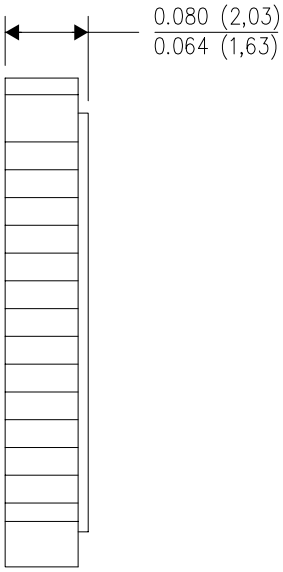

4040140/D 01/11

NOTES:
A. All linear dimensions are in inches (millimeters).
B. This drawing is subject to change without notice.
C. This package can be hermetically sealed with a metal lid.
D. Falls within JEDEC MS–004

IMPORTANT NOTICE AND DISCLAIMER

TI PROVIDES TECHNICAL AND RELIABILITY DATA (INCLUDING DATASHEETS), DESIGN RESOURCES (INCLUDING REFERENCE DESIGNS), APPLICATION OR OTHER DESIGN ADVICE, WEB TOOLS, SAFETY INFORMATION, AND OTHER RESOURCES “AS IS” AND WITH ALL FAULTS, AND DISCLAIMS ALL WARRANTIES, EXPRESS AND IMPLIED, INCLUDING WITHOUT LIMITATION ANY IMPLIED WARRANTIES OF MERCHANTABILITY, FITNESS FOR A PARTICULAR PURPOSE OR NON-INFRINGEMENT OF THIRD PARTY INTELLECTUAL PROPERTY RIGHTS.

These resources are intended for skilled developers designing with TI products. You are solely responsible for (1) selecting the appropriate TI products for your application, (2) designing, validating and testing your application, and (3) ensuring your application meets applicable standards, and any other safety, security, or other requirements. These resources are subject to change without notice. TI grants you permission to use these resources only for development of an application that uses the TI products described in the resource. Other reproduction and display of these resources is prohibited. No license is granted to any other TI intellectual property right or to any third party intellectual property right. TI disclaims responsibility for, and you will fully indemnify TI and its representatives against, any claims, damages, costs, losses, and liabilities arising out of your use of these resources.

TI’s products are provided subject to TI’s Terms of Sale (www.ti.com/legal/termsofsale.html) or other applicable terms available either on ti.com or provided in conjunction with such TI products. TI’s provision of these resources does not expand or otherwise alter TI’s applicable warranties or warranty disclaimers for TI products.

Mailing Address: Texas Instruments, Post Office Box 655303, Dallas, Texas 75265
Copyright © 2019, Texas Instruments Incorporated

Looking for pricing, stock, or lifecycle information?

Click below to explore more details on WIN SOURCE:

- View UC3825DWTRG4 on WIN SOURCE
- Texas Instruments Information

Optimize Your Supply Chain with WIN SOURCE Solutions

- Global Sourcing Solution
- Obsolete Management
- Cost Control Management
- Shortage Management
- Alternative Solution
- Excess Inventory Management