THE DATASHEET OF

SMDA12C-4

www.win-source.net 0086-755-83957316

Technical Data
Data Sheet N0298, Rev. A

SMDA03C-4 THRU SMDA24C-4 TVS ARRAY SERIES

SO-8

Description

The SMDAXXC-4 series of TVS array have been designed to provide bidirectional protection for sensitive electronics from damage due to voltage transients caused by electrostatic discharge (ESD), electrical fast transients (EFT), lightning and other voltage-induced transient events. The device can be used to protect combinations of four bidirectional lines.

Schematic & Pin Configuration

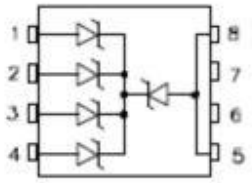

Features

- Protects 3.3, 5, 12, 15, 24 V Components
- Bidirectional
- Provides Electrically Isolated Protection
- 300 W @ 8/20 us
- Protects 4 Lines
- SO-8 Packaging
- This is a Pb − Free Device
- All SMC parts are traceable to the wafer lot
- Additional testing can be offered upon request

Mechanical Characteristics

- SO-8 Surface Mount Package
- Approximate Weight: 0.1 grams
- PIN #1 Indicator: DOT on top of package
- Packaging: Tubes or Tape & Reel per EIA Standard 481

Application

- Network Interfaces
- Portable Electronics
- Cellular Phone Terminals
- Audio/Video Inputs
- I/O Transceivers

Absolute Maximum Ratings:

Parameter	Symbol	Value	Units
Peak Pulse Power, 8/20 µs Wave shape	P	300	W
Operating Temperature	T_J	-55 to +125	°C
Storage Temperature	T_{stg}	-55 to +150	°C
Lead Soldering Temperature	T_L	260 (10 Sec.)	°C

SMDA03C-4 THRU SMDA24C-4

Technical Data
Data Sheet N0298, Rev. A

RoHS Pb

Electrical Characteristics@25°C

Part Number	Stand-off Voltage Vwm (V) Max	Breakdown Voltage V_{BR} @1mA (V) Min	Clamping Voltage Vc @ 1 A (V) Max	Leakage Current I_R @ Vwm (uA) Max	Capacitance (f = 1MHz) C @ 0V (pF) Max	Temperature Coefficient of V_{BR} a(V_{BR}) mv/°C Max
SMDA03C-4	3.3	4	7	200	300	-5
SMDA05C-4	5.0	6	9.8	40	200	3
SMDA12C-4	12.0	13.3	19	1	185	10
SMDA15C-4	15.0	16.7	24	1	140	13
SMDA24C-4	24.0	26.7	43	1	90	30

Ratings and Characteristics Curves

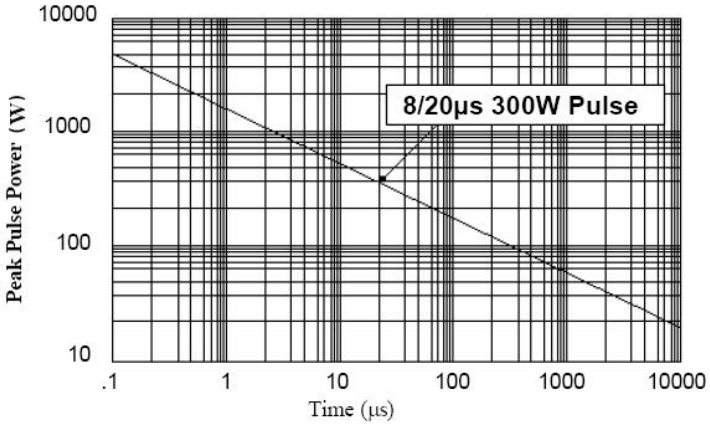

Figure 1. Peak Pulse Power Vs Pulse Time (µs)

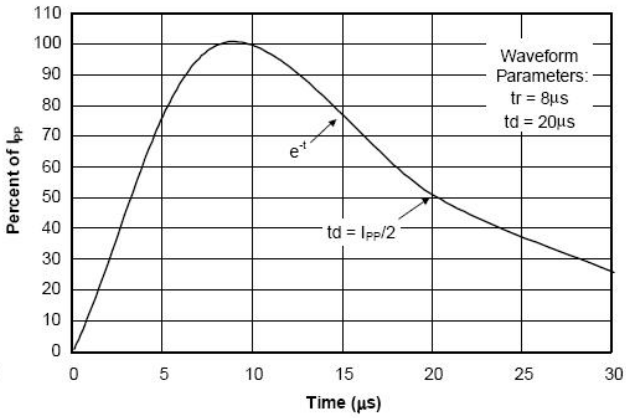

Figure 2. Pulse Wave Form

Ordering Information

Device	Package	Shipping
SMDA03C-4 THRU SMDA24C-4	SO-8 (Pb-Free)	2500pcs / reel

For information on tape and reel specifications, including part orientation and tape sizes, please refer to our tape and reel packaging specification.

Marking Diagram

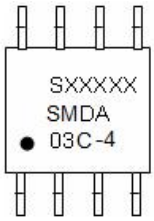

Where XXXXX is YYWWL

SMDA03C-4 = Part Number
S = S
YY = Year
WW = Week
L = Lot Number

Cautions: Molding resin
Epoxy resin UL:94V-0

Technical Data
Data Sheet N0298, Rev. A

Circuit Diagram

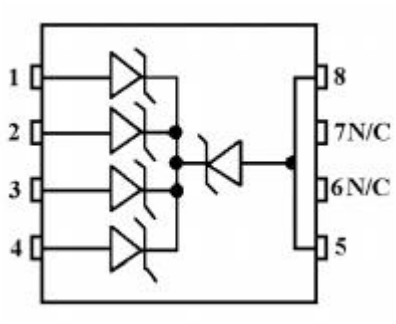

Mechanical Dimensions SO-8

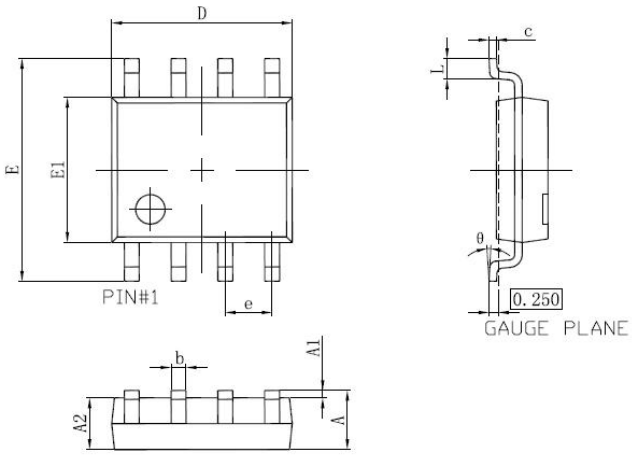

SYMBOL	Millimeters		Inches	
	MIN.	MAX.	MIN.	MAX.
A	1.350	1.750	0.053	0.069
A1	0.100	0.250	0.004	0.010
A2	1.350	1.550	0.053	0.061
b	0.330	0.510	0.013	0.020
c	0.170	0.250	0.007	0.010
D	4.800	5.000	0.189	0.197
e	1.270(BSC)		0.050(BSC)	
E	5.800	6.200	0.228	0.244
E1	3.800	4.000	0.150	0.157
L	0.400	1.270	0.016	0.031
θ	0°	8°	0°	8°

Carrier Tape Specification SO-8

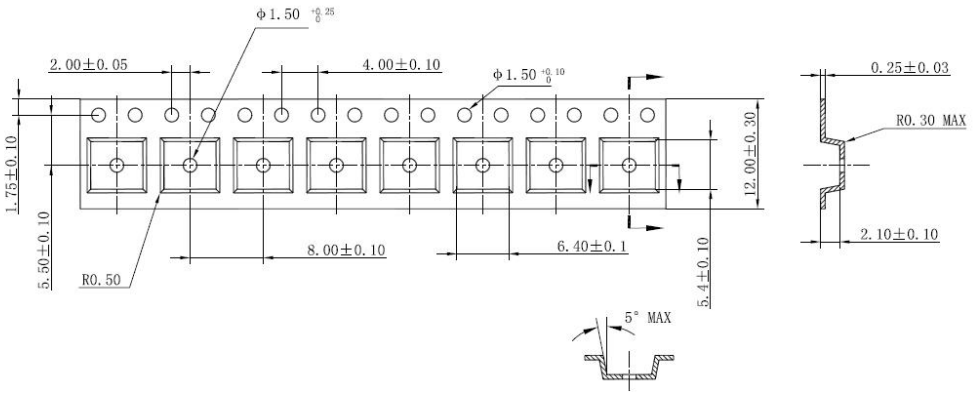

Technical Data
Data Sheet N0298, Rev. A

DISCLAIMER:
1- The information given herein, including the specifications and dimensions, is subject to change without prior notice to improve product characteristics. Before ordering, purchasers are advised to contact the SMC - Sangdest Microelectronics (Nanjing) Co., Ltd sales department for the latest version of the datasheet(s).
2- In cases where extremely high reliability is required (such as use in nuclear power control, aerospace and aviation, traffic equipment, medical equipment , and safety equipment) , safety should be ensured by using semiconductor devices that feature assured safety or by means of users' fail-safe precautions or other arrangement .
3- In no event shall SMC - Sangdest Microelectronics (Nanjing) Co., Ltd be liable for any damages that may result from an accident or any other cause during operation of the user's units according to the datasheet(s). SMC - Sangdest Microelectronics (Nanjing) Co., Ltd assumes no responsibility for any intellectual property claims or any other problems that may result from applications of information, products or circuits described in the datasheets.
4- In no event shall SMC - Sangdest Microelectronics (Nanjing) Co., Ltd be liable for any failure in a semiconductor device or any secondary damage resulting from use at a value exceeding the absolute maximum rating.
5- No license is granted by the datasheet(s) under any patents or other rights of any third party or SMC - Sangdest Microelectronics (Nanjing) Co., Ltd.
6- The datasheet(s) may not be reproduced or duplicated, in any form, in whole or part, without the expressed written permission of SMC - Sangdest Microelectronics (Nanjing) Co., Ltd.
7- The products (technologies) described in the datasheet(s) are not to be provided to any party whose purpose in their application will hinder maintenance of international peace and safety nor are they to be applied to that purpose by their direct purchasers or any third party. When exporting these products (technologies), the necessary procedures are to be taken in accordance with related laws and regulations..

Looking for pricing, stock, or lifecycle information?

Click below to explore more details on WIN SOURCE:

- View SMDA12C-4 on WIN SOURCE
- SMC Diode Solutions Information

Optimize Your Supply Chain with WIN SOURCE Solutions

- Global Sourcing Solution
- Obsolete Management
- Cost Control Management
- Shortage Management
- Alternative Solution
- Excess Inventory Management