THE DATASHEET OF

LM3450MT/NOPB

www.win-source.net 0086-755-83957316

LED Drivers with Active Power Factor Correction and Phase Dimming Decoder

Check for Samples: LM3450

FEATURES

- **Critical Conduction Mode PFC**
- **Over-Voltage Protection**
- **Feedback Short Circuit Protection**
- **70:1 PWM Decoded From Phase Dimmer**
- **Analog Dimming**
- **Programmable Dimming Range**
- **Digital Angle and Dimmer Detection**
- **Dynamic Holding Current**
- **Smooth Dimming Transitions**
- **Low Power Operation**
- **Start-Up Pre-Regulator Bias**
- **Precision Voltage Reference**

APPLICATIONS

- **Dimmable Downlights, Troffers, and Lowbays**
- **Large Form Factor Bulbs**
- **Indoor and Outdoor Area SSL**
- **Power Supply PFC**

DESCRIPTION

The LM3450/50A is a power factor controller (PFC) with separate phase dimming decoder. The PFC regulates the output voltage while maintaining excellent power factor. The phase dimming decoder interprets the phase angle and remaps it to a 500Hz PWM output. This device is ideal for implementing a dimmable off-line LED driver for 10-100W loads.

The phase dimming decoder has several unique features. The input-output mapping is programmable for design flexibility, while a dynamic filter and variable sampling rate provide smooth uniform dimming. A dynamic hold circuit ensures that the phase dimmer angle is decoded properly while minimizing extra power loss.

The LM3450A is identical to the LM3450 with the exception of one circuit operation. The dynamic hold current is sampled in the LM3450 while it continuously operates in the LM3450A. This difference between the two devices defines the suitable applications for each. The following is a general guideline for choosing the correct device:

- Any 120V designs with P_{OUT} > 15W - LM3450A
- Any 230V designs with P_{OUT} > 25W - LM3450A
- 120V 2-Stage designs with P_{OUT} < 15W - LM3450
- 230V 2-Stage designs with P_{OUT} < 25W - LM3450

Typical Application

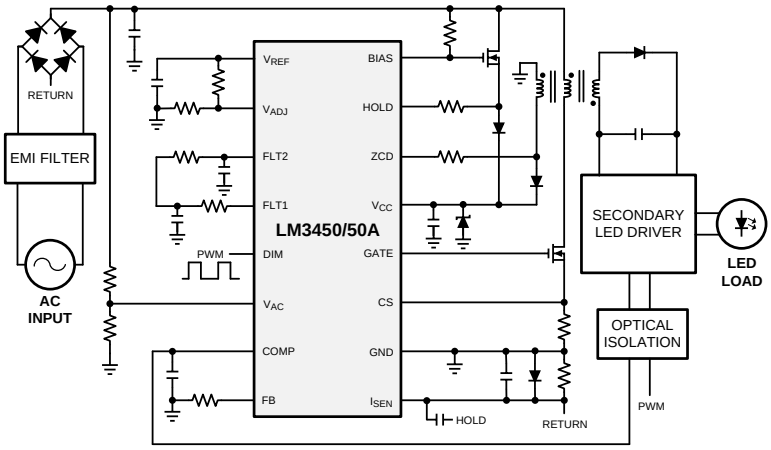

Please be aware that an important notice concerning availability, standard warranty, and use in critical applications of Texas Instruments semiconductor products and disclaimers thereto appears at the end of this data sheet.

All trademarks are the property of their respective owners.

PRODUCTION DATA information is current as of publication date. Products conform to specifications per the terms of the Texas Instruments standard warranty. Production processing does not necessarily include testing of all parameters.

Copyright © 2010–2013, Texas Instruments Incorporated

Connection Diagram

Top View

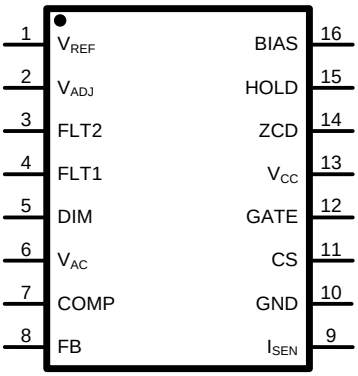

Figure 1. 16-Lead TSSOP Package Number PW

PIN DESCRIPTIONS

Pin	Name	Description	Application Information
1	V_{REF}	3V Reference	Reference Output: Connect directly to V_{ADJ} or to resistor divider feeding V_{ADJ} and to necessary external circuits.
2	V_{ADJ}	Analog Adjust	Analog Dim and Phase Dimming Range Input: Connect directly to V_{REF} to force standard 70% phase dimming range. Connect to resistor divider from V_{REF} to extend usable range of some phase dimmers or for analog dimming. Connect to GND for low power mode.
3	FLT2	Filter 2	Ramp Comparator Input: Connect a series resistor from FLT1 capacitor and a capacitor to GND to establish second filter pole.
4	FLT1	Filter 1	Angle Decoder Output: Connect a series resistor to a capacitor to GND to establish first filter pole.
5	DIM	500 Hz PWM Output	Open Drain PWM Dim Output: Connect to dimming input of output stage LED driver (directly or with isolation) to provide decoded dimming command.
6	V_{AC}	Sampled Rectified Line	Multiplier and Angle Decoder Input: Connect to resistor divider from rectified AC line.
7	COMP	Compensation	Error Amplifier Output and PWM Comparator Input: Connect a capacitor to GND to set the compensation.
8	FB	Feedback	Error Amplifier Inverting Input: Connect to output voltage via resistor divider to control PFC voltage loop for non-isolated designs. Connect a 5.11kΩ resistor to GND for isolated designs (bypasses error amplifier). Also includes over-voltage protection and shutdown modes.
9	I_{SEN}	Input Current Sense	Input Current Sense Non-Inverting Input: Connect to diode bridge return and resistor to GND to sense input current for dynamic hold. Connect a 0.1µF capacitor and Schottky diode to GND, and a 0.22µF capacitor to HOLD.
10	GND	Power Ground	System Ground
11	CS	Current Sense	MosFET Current Sense Input: Connect to positive terminal of sense resistor in PFC MosFET source.
12	GATE	Gate Drive	Gate Drive Output: Connect to gate of main power MosFET for PFC.
13	V_{CC}	Input Supply	Power Supply Input: Connect to primary bias supply. Connect a 0.1µF bypass capacitor to ground.
14	ZCD	Zero Crossing Detector	Demagnetization Sense Input: Connect a 100kΩ resistor to transformer/inductor winding to detect when all energy has been transferred.
15	HOLD	Dynamic Hold	Open Drain Dynamic Hold Input: Connect to holding resistor which is connected to source of passFET.
16	BIAS	Pre-regulator Gate Bias	Pre-regulator Gate Bias Output: Connect to gate of passFET and through resistor to rectified AC (drain of passFET) to aid with startup.

Copyright © 2010–2013, Texas Instruments Incorporated

These devices have limited built-in ESD protection. The leads should be shorted together or the device placed in conductive foam during storage or handling to prevent electrostatic damage to the MOS gates.

ABSOLUTE MAXIMUM RATINGS (1)(2)

V_{CC}, HOLD, DIM, BIAS		-0.3V to 25.0V
HOLD Power		250 mW Continuous
BIAS Current		5.0mA Continuous
ZCD Current		+/- 10mA
COMP, FB, V_{AC}, FLT1, FLT2, V_{REF}, CS, V_{ADJ}		-0.3V to 7.0V
I_{SEN}		-7.0V to 7.0V
GATE		-0.3V to 18V Continuous -2.5V for 100ns 20.5V for 100ns -1mA to +1mA Continuous
Continuous Power Dissipation		Internally Limited
Maximum Junction Temperature		Internally Limited
Storage Temperature Range		-65°C to +150°C
Maximum Lead Temperature (Solder and Reflow) (3)		260°C
ESD Susceptibility (4)	HBM	2kV
	MM	200V
	FICDM	750V

(1) Absolute Maximum Ratings indicate limits beyond which damage to the component may occur. Operating Ratings are conditions under which operation of the device is specified and do not imply ensured performance limits. For specified performance limits and associated test conditions, see the Electrical Characteristics table. All voltages are with respect to the potential at the GND pin, unless otherwise specified.
(2) If Military/Aerospace specified devices are required, please contact the Texas Instruments Sales Office/Distributors for availability and specifications.
(3) Refer to http://www.ti.com/packaging for more detailed information and mounting techniques.
(4) Human Body Model, applicable std. JESD22-A114-C. Machine Model, applicable std. JESD22-A115-A. Field Induced Charge Device Model, applicable std. JESD22-C101-C.

OPERATING CONDITIONS (1)

V_{CC} Range	8.5V to 20V
Junction Temperature Range	-40°C to +125°C

(1) Absolute Maximum Ratings indicate limits beyond which damage to the component may occur. Operating Ratings are conditions under which operation of the device is specified and do not imply ensured performance limits. For specified performance limits and associated test conditions, see the Electrical Characteristics table. All voltages are with respect to the potential at the GND pin, unless otherwise specified.

Copyright © 2010–2013, Texas Instruments Incorporated

ELECTRICAL CHARACTERISTICS[1]

Unless otherwise specified V_{CC} = 14V. Specifications in standard type face are for T_J = 25°C and those with **boldface type** apply over the full **Operating Temperature Range** (T_J = −40°C to +125°C). Typical values represent the most likely parametric norm at T_A = T_J = +25°C, and are provided for reference purposes only.

Symbol	Parameter	Conditions	Min[2]	Typ[3]	Max[2]	Units
SUPPLY VOLTAGE INPUT (V_{CC})						
$V_{CC-RISE}$	Controller Enable Threshold	V_{CC} Rising	**12.2**	13.0	**13.6**	V
$V_{CC-FALL}$	Controller Disable Threshold	V_{CC} falling	**7.4**	7.9	**8.5**	
	Glitch Filter Delay			9		µs
	Turn-on Delay			40		
I_Q	V_{CC} Quiescent Current	No Switching		1.6		mA
I_{Q-SD}	V_{CC} Shutdown Current	V_{FB} = 0V		515	**625**	µA
ERROR AMPLIFIER & COMPENSATION (FB, COMP)						
V_{FB}	FB Reference (Normal Operation)		**2.43**	2.50	**2.57**	V
	Input Bias Current	V_{FB} = 2.5V		100		nA
G_M	Transconductance	V_{FB} =2.5V	**69**	115	**161**	µS
	Output Source / Sink Capability		**60**	85	**110**	µA
	FB Pull-up Current Source	V_{FB} < 1.8V	**43**	51	**59**	
	COMP Pull-up Resistor			5		kΩ
V_{CMP-B}	COMP Low Threshold (Burst)	V_{CMP} Falling		V_{THM} -0.08		V
	COMP Low Hysteresis			20		mV
V_{FB-SD}	Low Threshold (Shutdown)	V_{FB} Falling	**150**	168	**186**	
	FB Low Hysteresis			20		
V_{FB-EAD}	FB Mid Threshold (EA Disabled)	V_{FB} Falling	**328**	346	**368**	
	FB Mid Hysteresis			20		
V_{FB-OV}	FB High Threshold (Over-voltage)			1.20 x V_{FB}	**1.22 x V_{FB}**	V
	COMP Pre-bias Source Current	V_{CMP}= 0.5V		415		µA
V_{THM}	Minimum COMP Voltage (Normal)			1.47		V
ANGLE DEMODULATION & MULTIPLIER (COMP, V_{AC})						
V_{AC-DET}	V_{AC} Angle Detection Threshold		**334**	356	**378**	mV
	Angle Demodulation Delay Time	Both edges		8		µs
	VAC Dynamic Input Voltage Range		0 to 5.5			V
	COMP Dynamic Input Voltage Range		V_{THM} to V_{THM}+2			
	V_{AC} Input Impedance			500		kΩ
K_M	Multiplier Gain (Includes Internal Resistor Divider)	V_{AC} = 3V, V_{CMP} = V_{THM}+1.5V		0.5		1/V
ZERO CURRENT DETECTOR (ZCD)						
$V_{ZCD-RIS}$	ZCD Input Threshold	V_{ZCO}Rising	**1.45**	1.5	**1.55**	V
	Hysteresis		**150**	200	**250**	mV
	Delay to Output			135		ns
V_{ZCD-H}	Positive Clamp Voltage	I_{ZCO} = 1mA		6.0		V
V_{ZCD-L}	Negative Clamp Voltage	I_{ZCO} = –50µA		0.61		
PWM COMPARATOR (CS)						
V_{OS}	PWM Comparator Input Offset Voltage			30		mV

(1) Absolute Maximum Ratings indicate limits beyond which damage to the component may occur. Operating Ratings are conditions under which operation of the device is specified and do not imply ensured performance limits. For specified performance limits and associated test conditions, see the Electrical Characteristics table. All voltages are with respect to the potential at the GND pin, unless otherwise specified.
(2) All limits specified at room temperature (standard typeface) and at temperature extremes (bold typeface). All room temperature limits are 100% production tested. All limits at temperature extremes are specified via correlation using standard Statistical Quality Control (SQC) methods. All limits are used to calculate Average Outgoing Quality Level (AOQL).
(3) Typical numbers are at 25°C and represent the most likely norm.

Copyright © 2010–2013, Texas Instruments Incorporated

ELECTRICAL CHARACTERISTICS[1] (continued)

Unless otherwise specified V_{CC} = 14V. Specifications in standard type face are for T_J = 25°C and those with **boldface type** apply over the full **Operating Temperature Range** (T_J = −40°C to +125°C). Typical values represent the most likely parametric norm at T_A = T_J = +25°C, and are provided for reference purposes only.

Symbol	Parameter	Conditions	Min[2]	Typ[3]	Max[2]	Units
	PWM Comparator Input Bias Current			20		nA
V_{LIM}	CS Current Limit Threshold		**1.40**	1.50	**1.60**	V
	CS Delay to Output			100		ns
	CS Blanking Sinking Impedance			1		kΩ
t_{LEB}	Leading Edge Blanking (LEB) Time			140		ns
ANALOG ADJUST INPUT (V_{ADJ})						
V_{ADJ-LP}	V_{ADJ} Low Threshold (Low Power Mode)	V_{ADJ} Falling	**56**	75		mV
	V_{ADJ} Low Hysteresis			50		
	V_{ADJ} Pull-up Current Source			1		µA
	V_{ADJ} Open Voltage	V_{ADJ} Open		3		V
DYNAMIC HOLD CIRCUIT (HOLD, I_{SEN})						
$R_{DSON-HD}$	HOLD MosFET On-Resistance	ISEN Short to GND	**22**	30	**42**	Ω
$V_{SEN-REF}$	I_{SEN} Reference Voltage		**162**	200	**232**	mV
	I_{SEN} Bias Current			5		µA
PRE-REGULATOR GATE DRIVE OUTPUT (BIAS)						
V_{BIAS}	BIAS High Voltage @ 100µA	$V_{CC} < V_{CC-FALL}$	**18.8**	21	**22.6**	V
	BIAS Low Voltage @ 100µA	$V_{CC} > V_{CC-RISE}$	**13.5**	14	**14.5**	
GATE DRIVER OUTPUT (GATE)						
V_{GATE-H}	GATE Voltage High	I_{GATE} = 20mA		11.5		V
		I_{GATE} = 200mA		10.5		
	GATE Pull Down Resistance			2	**8**	Ω
	GATE Peak Current			[4]±1.5		A
REFERENCE VOLTAGE OUTPUT (V_{REF})						
V_{REF}	Reference Voltage	No Load	**2.85**	3	**3.15**	V
	Current Limit		**1.5**	2.0	**3.0**	mA
DIMMING OUTPUT (DIM, FLT1, FLT2)						
	FLT1 Output Impedance	Standby Mode		500		kΩ
		Transition mode		1.6		
	Triangle Waveform Compared to FLT2	High		1.49		V
		Low		15		mV
f_{DIM}	DIM Frequency		**180**	460	**700**	Hz
OFF-TIMERS						
$t_{OFF-MAX}$	Maximum Off-Time (Normal Operation)			340		µs
t_{OFF-LP}	Off-Time (Low Power Mode)			42		
THERMAL SHUTDOWN						
	Thermal Limit Threshold	[4]		160		°C
	Thermal Limit Hysteresis			20		
THERMAL RESISTANCE						
θ_{JA}	Junction to Ambient	TSSOP-16[4][5]		38.0		°C/W
θ_{JC}	Junction to Case			10.0		

(4) These electrical parameters are specified by design, and are not verified by test.
(5) Junction-to-ambient thermal resistance is highly board-layout dependent. In applications where high maximum power dissipation exists, namely driving a large MOSFET at high switching frequency from a high input voltage, special care must be paid to thermal dissipation issues during board design. In high-power dissipation applications, the maximum ambient temperature may have to be derated. Maximum ambient temperature (T_{A-MAX}) is dependent on the maximum operating junction temperature ($T_{J-MAX-OP}$ = 125°C for Q1, or 150°C for Q0), the maximum power dissipation of the device in the application (P_{D-MAX}), and the junction-to ambient thermal resistance of the package in the application (θ_{JA}), as given by the following equation: $T_{A-MAX} = T_{J-MAX-OP} – (\theta_{JA} \times P_{D-MAX})$.

Copyright © 2010–2013, Texas Instruments Incorporated

TYPICAL PERFORMANCE CHARACTERISTICS

T_A=+25°C and V_{CC} = 14V unless otherwise specified

HOLD R_{DSON} vs. Junction Temperature

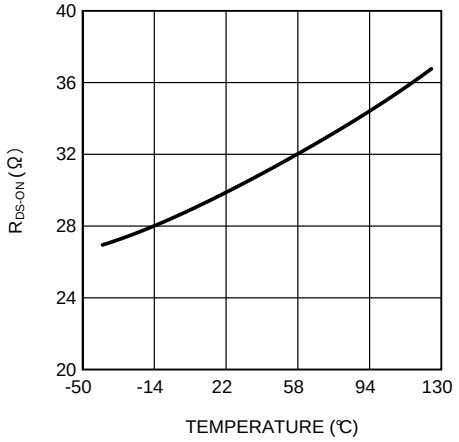

Figure 2.

Leading Edge Blanking vs. Junction Temperature

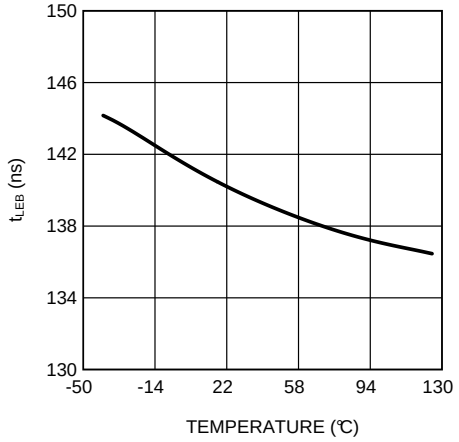

Figure 3.

Current Limit Threshold vs. Junction Temperature
V_{AC} = 3V; V_{CMP} = V_{THM} + 1.5V

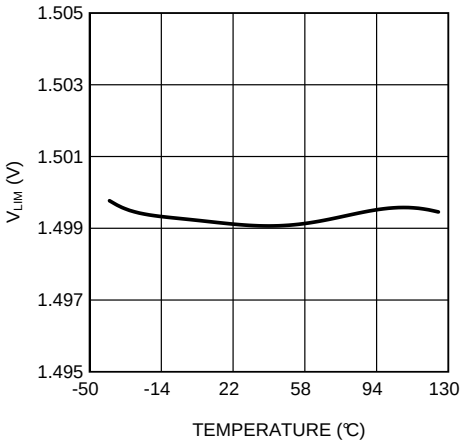

Figure 4.

Multiplier Gain vs. Junction Temperature
V_{AC} = 3V; V_{CMP} = V_{THM} + 1.5V

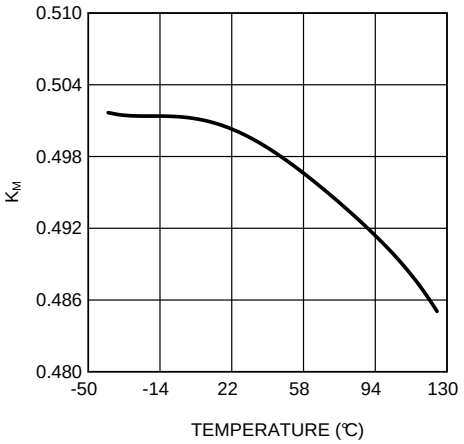

Figure 5.

Transconductance
V_{FB} = 2.5V; ΔV_{FB} = 50mV

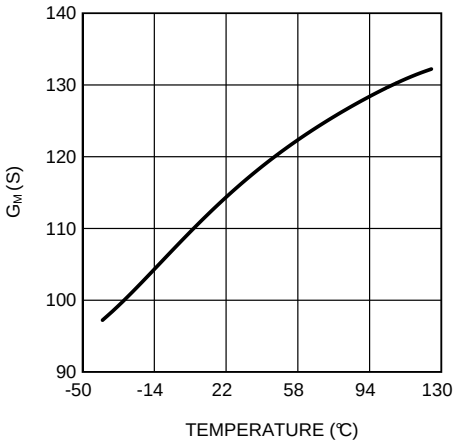

Figure 6.

BIAS Voltage vs. Junction Temperature
High @ V_{CC} < V_{CCFALL}; Low @ V_{CC} > V_{CCRISE}

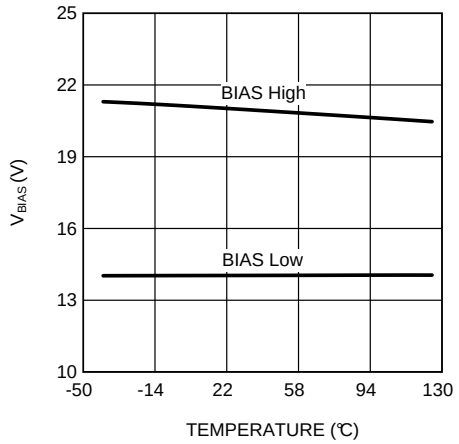

Figure 7.

Copyright © 2010–2013, Texas Instruments Incorporated

TYPICAL PERFORMANCE CHARACTERISTICS (continued)

T_A=+25°C and V_{CC} = 14V unless otherwise specified

V_{CC} UVLO Threshold vs. Junction Temperature

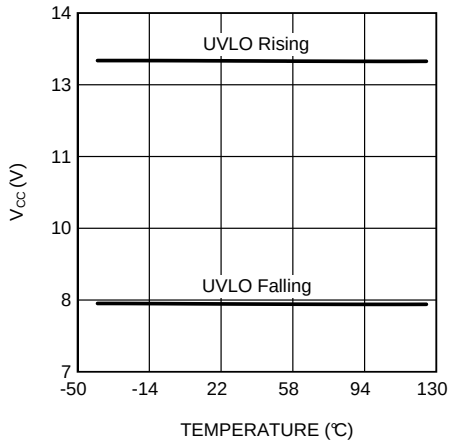

Figure 8.

Shutdown Current vs. Junction Temperature

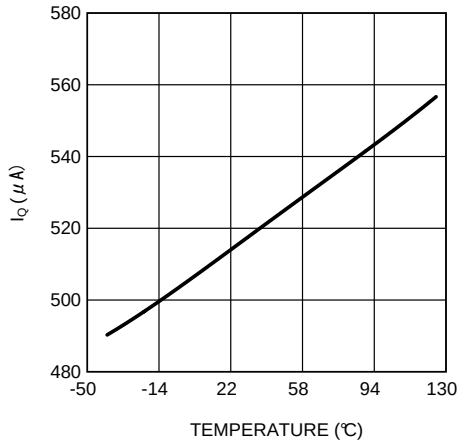

Figure 9.

V_{REF} Reference vs. Junction Temperature

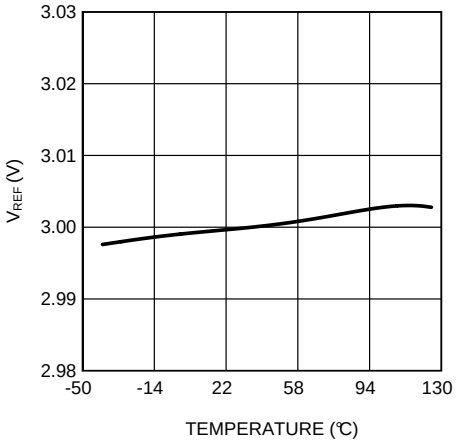

Figure 10.

FB Reference vs. Junction Temperature

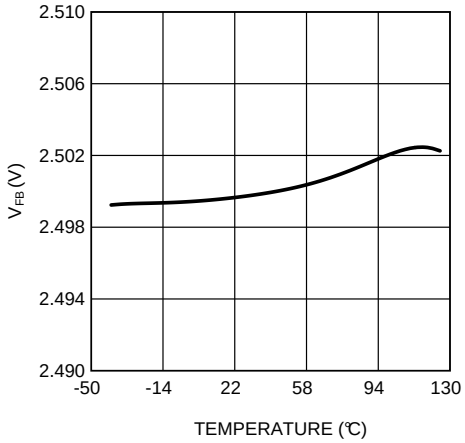

Figure 11.

I_{SEN} Reference vs. Junction Temperature

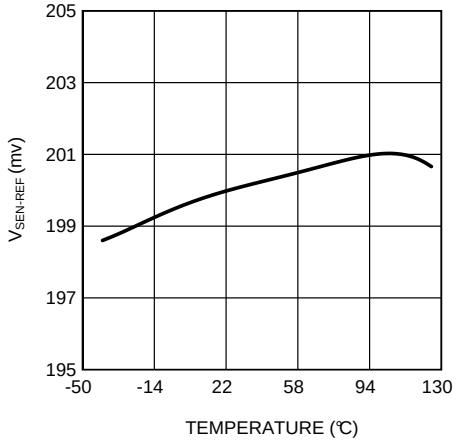

Figure 12.

V_{AC} Detection Threshold vs. Junction Temperature

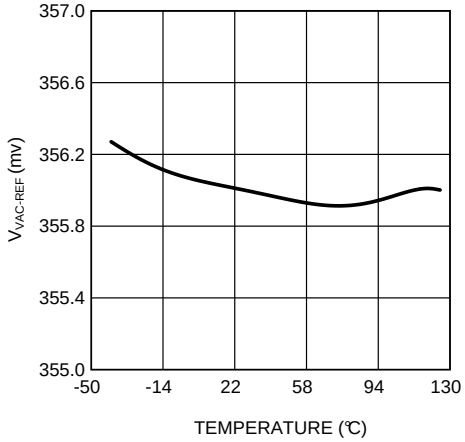

Figure 13.

Copyright © 2010–2013, Texas Instruments Incorporated

TYPICAL PERFORMANCE CHARACTERISTICS (continued)

T_A=+25°C and V_{CC} = 14V unless otherwise specified

Transconductance vs. V_{FB}

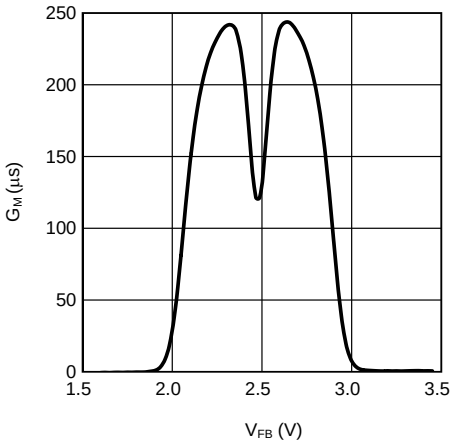

Figure 14.

Current Sense Threshold vs. V_{COMP} and V_{AC}

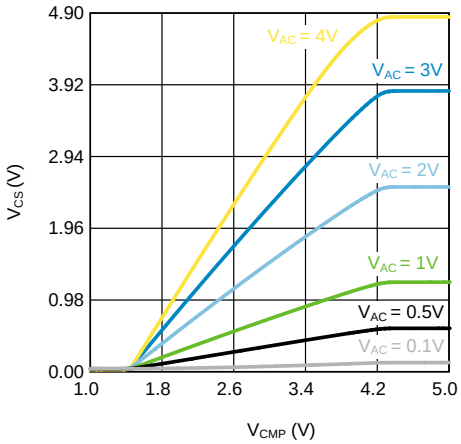

Figure 15.

Decoder Mapping from V_{AC} to DIM

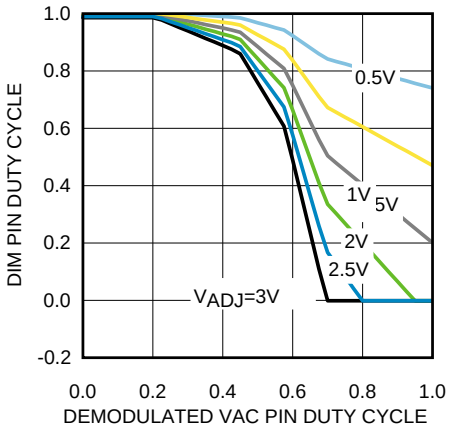

Figure 16.

Copyright © 2010–2013, Texas Instruments Incorporated

BLOCK DIAGRAM

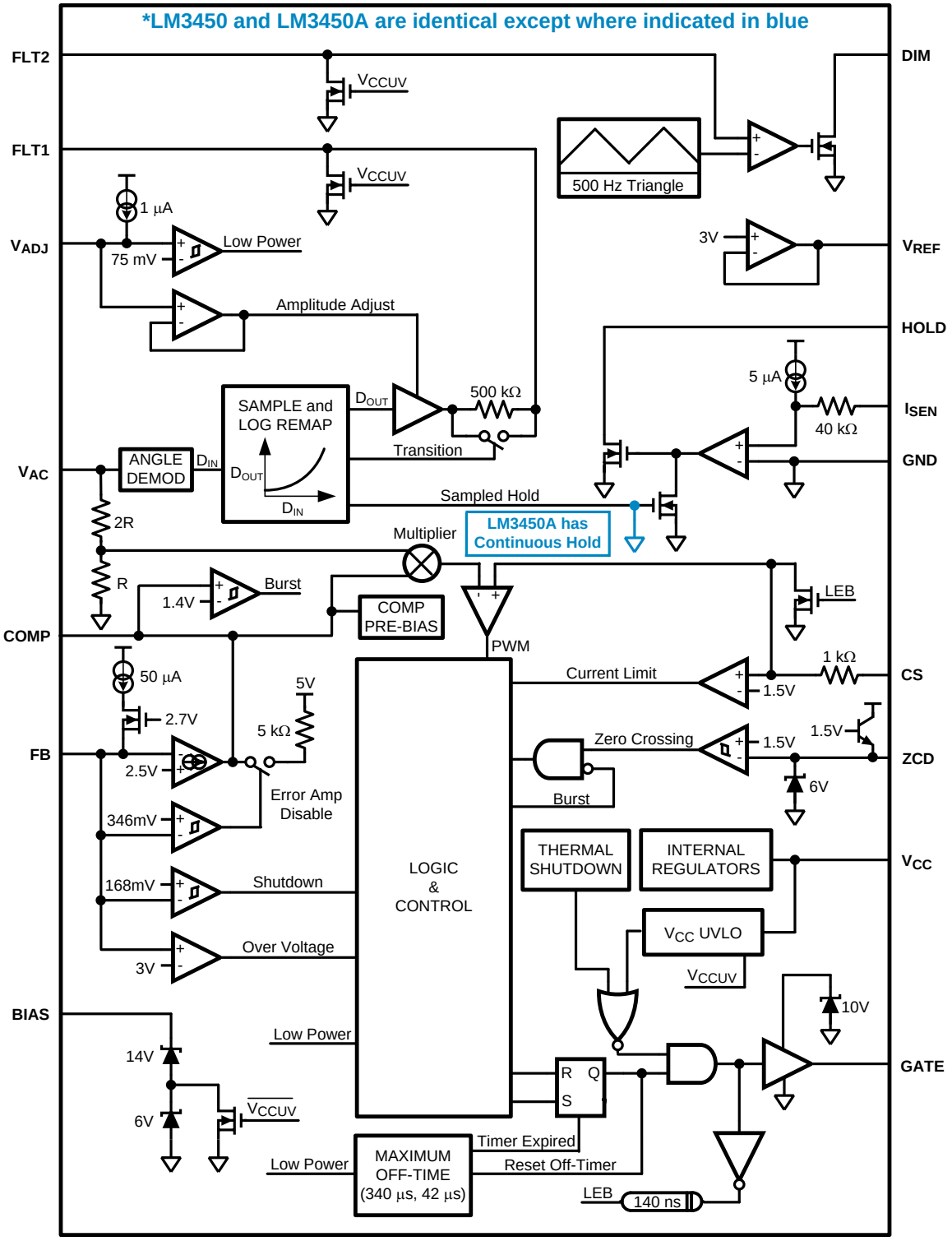

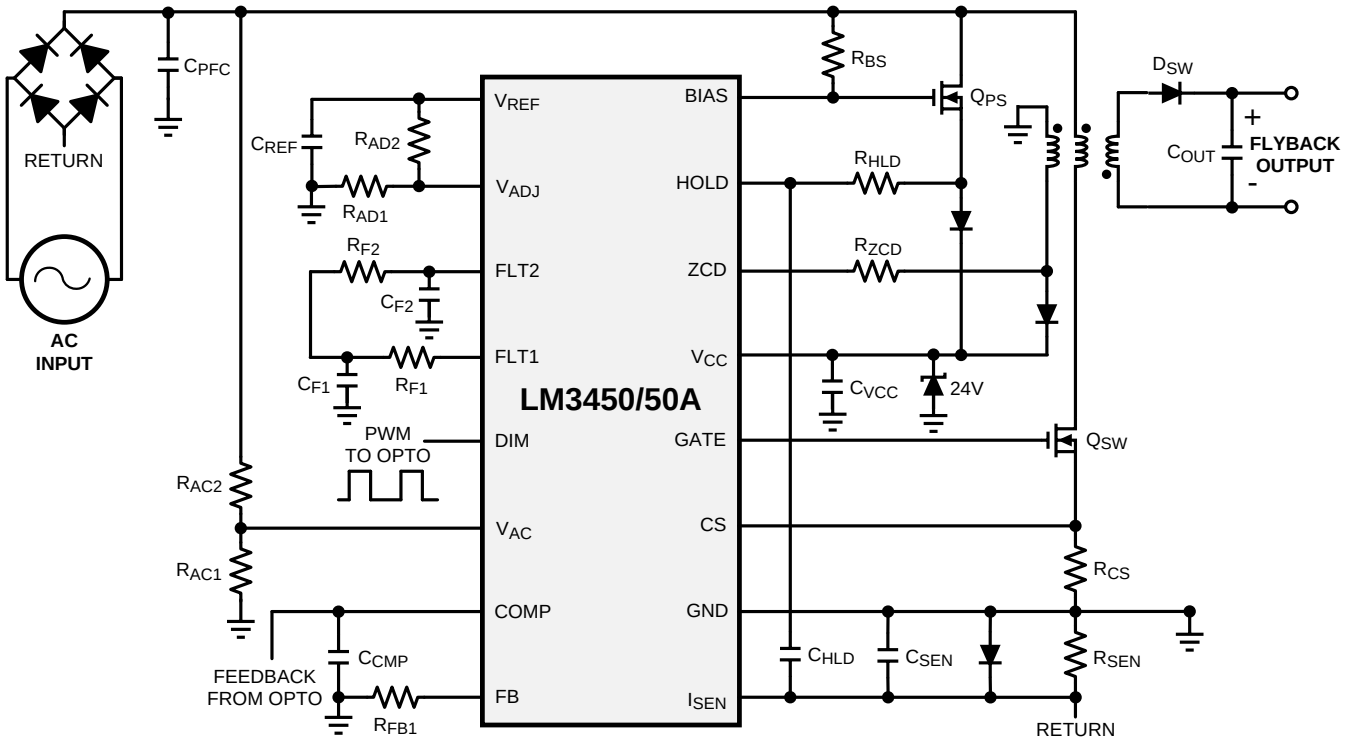

Figure 17. Typical Flyback Application

THEORY OF OPERATION

The LM3450/50A is a single device with both power factor control (PFC) and phase dimming decoder functions. This device is designed to control isolated flyback converters and provide active power factor correction. In addition to being a PFC, the LM3450/50A can interpret a phase dimming (frequently called triac dimming) input and provide a corresponding PWM output to properly dim an LED load. This combination of features provides an excellent method to convert a standard AC mains input to a dimmable LED output of 10-100W. It should be noted that the LM3450/50A can control a boost converter in a similar manner. However, this datasheet will focus mostly on the flyback topology due to the high demand for isolated LED driver applications. Discussion of the LM3450/50A functionality will refer to Figure 17 component designators.

The PFC control operates in critical conduction mode (CRM) using zero crossing detection (ZCD) to terminate the off-time. The PFC portion of this device includes an error amplifier, multiplier, current sense circuit, zero crossing detector, and gate driver. The internal error amplifier is used for feedback of the output voltage in non-isolated designs. However, it can be disabled for isolated designs where the error amplifier needs to be on the secondary side.

The phase dimmer decoder detects the dimming angle of the rectified AC line, decodes, filters and remaps it to a 500Hz PWM output. The PWM output can then be sent directly, or through optical isolation, to the dimming input of a second stage LED driver. To ensure the decoder properly interprets the dimming angle, dynamic hold is provided which prevents the phase dimmer from misfiring. The input current is sensed and when the current drops below a preset minimum, the system adds more current.

Both the dynamic hold and the decoder are sampled synchronously in the LM3450 to reduce the overall efficiency drop due to the additional hold current. When a decoding sample period occurs, the dynamic hold is activated to ensure a proper angle is decoded. Because of this sampling method, non-sampled cycles will potentially cause the phase dimmer to misfire but should not affect the output LED current regulation.

 Copyright © 2010–2013, Texas Instruments Incorporated

For higher power applications, where the dynamic hold provides much less current on average, the LM3450A can be used. The LM3450A has continuous dynamic hold which prevents the dimmer from ever misfiring. This is extremely helpful when designing for single stage solutions, where there is no second stage to provide good line rejection. The continuous dynamic hold is also helpful for the higher power two stage applications where the input capacitance is larger.

One last feature of the phase decoder is a dynamic filter that, combined with the variable sampling rate, provides fast, smooth dimming transitions.

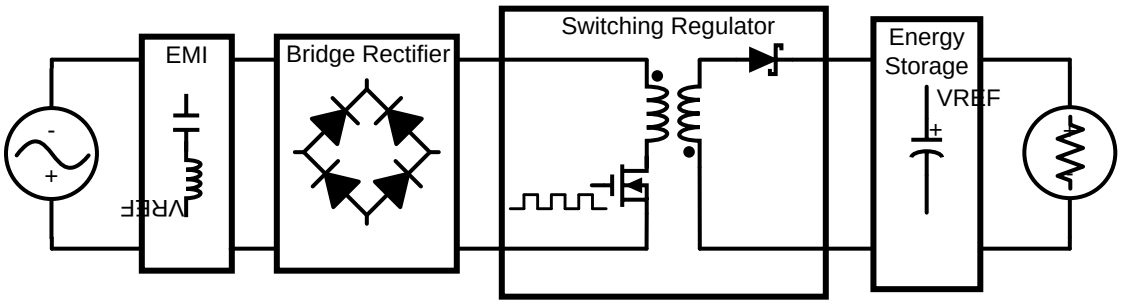

Figure 18. PFC System Architecture

PFC BACKGROUND

Power factor (PF) is a number between 0 and 1 that indicates how well energy is transmitted from input to output of a system. It can be described by average power (P_{AVG}), RMS voltage (V_{RMS}), and RMS current (I_{RMS}):

$$PF = \frac{P_{AVG}}{V_{RMS} \times I_{RMS}} \tag{1}$$

Or by distortion factor (K_{DIST}) and displacement factor (K_{DISP}):

$$PF = K_{DIST} \times K_{DISP} \tag{2}$$

With a purely resistive system, PF = 1. The addition of reactive elements necessary in any converter, such as EMI filters and energy storage, will induce some amount of displacement (phase shift between the input voltage and input current). The addition of switching devices will also create distortion (energy present in the harmonics relative to the switching frequencies). These non-idealities decrease the PF towards zero.

Active power factor correction attempts to make the input impedance look as resistive as possible to the power source. Since the output of the converter is usually a regulated voltage or current, there is a need for large energy storage elements to remove the twice line frequency (100Hz or 120Hz) ripple. A power factor control architecture, as shown in Figure 18, has very little capacitance at the input. Instead, the twice line frequency content is removed with large energy storage capacitance at the output.

Using this control architecture, the converter is able to provide two important functions at the same time:

- Shape the input current
- Regulate the output voltage

The PFC control approach requires two separate control loops to achieve both functions: a fast loop which shapes the input current, and a slow loop that regulates the output voltage.

The fast control loop shapes the input current to have the same sinusoidal shape as the AC input voltage. Assuming both are perfect sinusoids with zero distortion or phase shift, the power factor will be perfect (unity). Unfortunately, distortion is always present in switching converters. An input filter, which is required to comply with EMI standards, helps to attenuate the switching content, thereby reducing distortion. However, the added filter capacitance will increase the phase shift at the same time. Though perfect PF is not achievable within real applications, extremely high PF (>.99) is possible using most active PFCs.

Copyright © 2010–2013, Texas Instruments Incorporated

The output voltage has to be regulated slowly to ensure the converter ignores the twice line frequency ripple present on the output. Therefore, the voltage loop containing the error amplifier should have a bandwidth at least an order of magnitude slower (<20Hz is common). Sometimes the bandwidth is increased to improve transient response, which is the case with off-line dimmable LED drivers. Though PF decreases with the increase in bandwidth, high PF (>.95) is still possible.

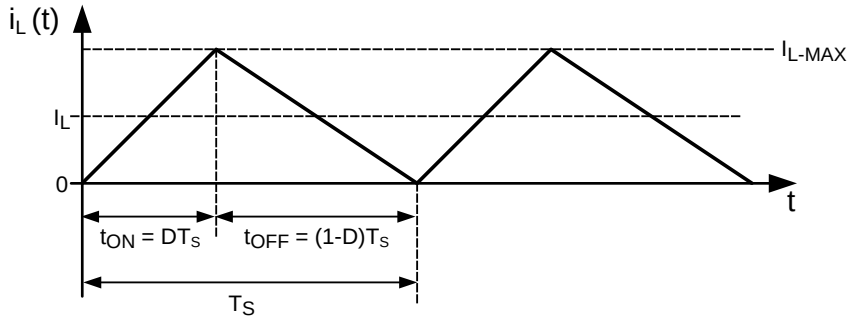

Figure 19. Basic CRM Inductor Current Waveform

CRM BACKGROUND

During critical conduction mode (CRM), a converter operates at the boundary of continuous conduction mode (CCM) and discontinuous conduction mode (DCM). This is usually implemented as follows. The main switching MosFET (Q_{SW}) is turned on and the inductor current rises to a peak threshold. Q_{SW} is then turned off and the current falls until it reaches zero. At this point, Q_{SW} is turned on and the cycle repeats. Near zero voltage switching, enabled by the inductor current return to zero, gives CRM topologies an efficiency improvement compared to CCM topologies. Figure 19 shows the resulting inductor current waveform, where the average inductor current (I_L) is half of the peak current (I_{L-MAX}).

In a CRM flyback PFC application, the rectified AC input is fed forward to the control loop, creating a sinusoidal primary peak current envelope (I_{P-pk}) as shown in Figure 20. The secondary peak current envelope (I_{S-pk}) will simply be a scaled version of the primary according to the turns ratio of the transformer. Assuming good attenuation of the switching ripple via the EMI filter, the average input current (I_{IN}), represented by the red line in Figure 20, can also be approximated as a sinusoid proportional to the duty cycle (D(t)):

$$I_{in}(t) = \frac{I_{P-PK} \times D(t)}{2} \tag{3}$$

Since CRM operation is hysteretic and the input voltage is fed-forward, the input current shaping loop is as fast as possible. Only the output voltage needs to be regulated with a narrow bandwidth error amplifier, which greatly simplifies the system dynamics.

Copyright © 2010–2013, Texas Instruments Incorporated

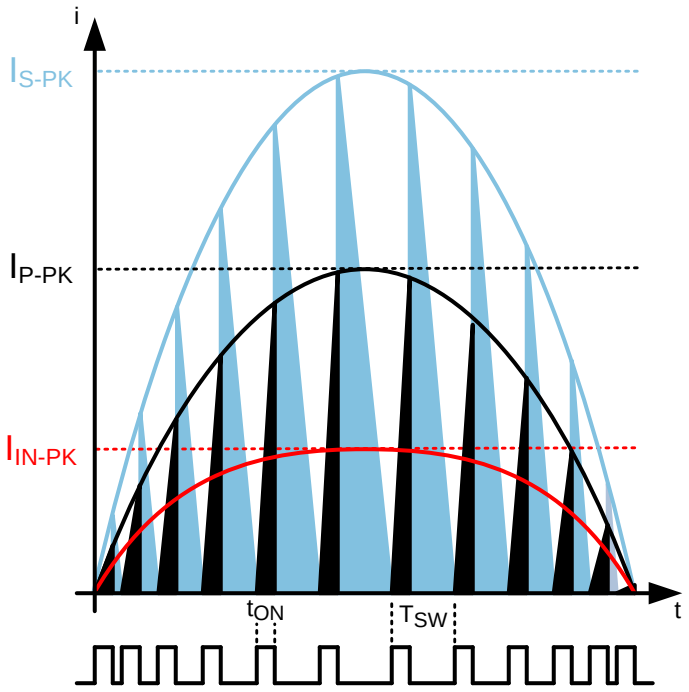

Figure 20. CRM Flyback Current Waveforms

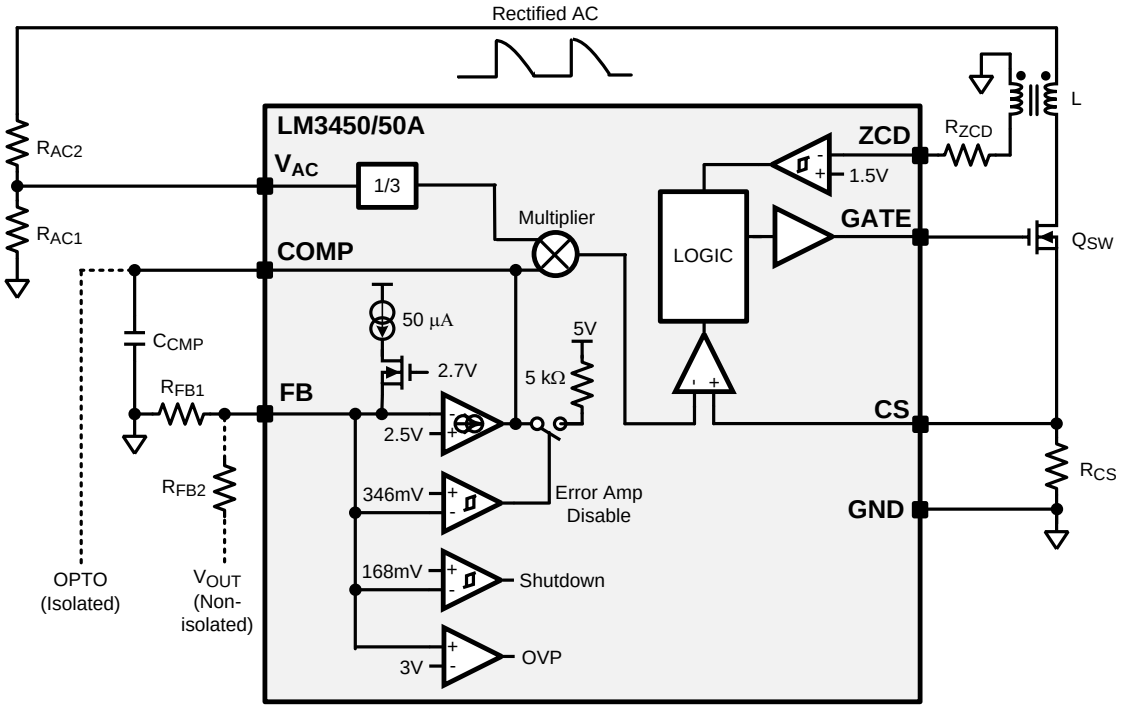

Figure 21. PFC Control Circuit

POWER FACTOR CONTROLLER

The LM3450/50A uses CRM control to regulate the output voltage and provide power factor correction. In a non-isolated boost topology, an external voltage divider (R_{FB1}, R_{FB2}) is used to sense the output voltage, as shown in Figure 21. The divider is connected to the inverting input (FB) of the internal error amplifier. The LM3450/50A regulates the feedback voltage (V_{FB}) to 2.5V in a closed loop fashion.

The FB pin has a shutdown mode to protect against a feedback short and an OVP mode which terminates switching when output over-voltage is sensed.

With the FB shutdown mode, it is necessary to have a preliminary biasing method for the output of the error amplifier (COMP). Otherwise, the converter would never start. COMP is pre-biased with a 415µA current until the voltage at COMP (V_{CMP}) exceeds the minimum operational voltage (V_{THM}).

For an isolated flyback topology, where the error amplifier is on the secondary, the LM3450/50A internal error amplifier can be bypassed using a single 5.11kΩ resistor (R_{FB1}) from FB to GND. This engages an internal 5kΩ pull-up resistor at COMP. COMP can then be connected directly to the optical isolation as shown in Figure 21.

COMP and the sensed rectified AC input voltage (V_{AC}), provided via a resistor divider (R_{AC1}, R_{AC2}), are inputs to the multiplier. The current through the sense resistor (R_{CS}) produces a voltage (V_{CS}) that is compared to the multiplier output. When V_{CS} exceeds the multiplier output, Q_{SW} is turned off. The peak detect threshold and the current slope during an on-time are proportionally changing which yields a nearly constant on-time, shown in Figure 20:

$$t_{ON} = \frac{L \times I_{P\text{-}PK}}{V_{IN\text{-}PK}} \tag{4}$$

Once Q_{SW} is turned off, the LM3450/50A waits until the inductor (boost) or transformer (flyback) is demagnetized to turn Q_{SW} on again. Demagnetization, sensed at ZCD, occurs when the current through the magnetic component falls to zero. Since the output voltage is regulated, the slope of the current remains relatively constant and, coupled with the variable peak detect, creates a variable off-time.

The sinusoidal peak detection envelope creates an input current that is sinusoidal and in phase with the input voltage providing excellent PF. The PWM comparator 30mV input offset voltage ensures current is drawn at the zero-crossings of the AC line, reducing distortion and further improving PF.

CURRENT SENSE

The LM3450/50A senses current through Q_{SW} via a sense resistor (R_{CS}) between the source of Q_{SW} and GND. When V_{CS} exceeds the output of the multiplier (V_{MLT}), Q_{SW} is turned off. V_{MLT} is variable over the line cycle and is a function of the scaled rectified AC voltage (V_{AC}), the COMP voltage referenced from its operational minimum (V_{COMP}-V_{THM}), the multiplier gain (K_M) and the PWM comparator offset (V_{OS}):

$$V_{MLT} = K_M \times V_{AC} \times \left(V_{COMP} - V_{THM}\right) + V_{OS} \tag{5}$$

The LM3450/50A has a leading edge blanking (LEB) circuit that pulls the current sense input to the PWM comparator low for 140µs at the beginning of each on-time. The LEB blanks the current spike and associated ringing due to the turn-on transient of Q_{SW}, limiting the minimum achievable duty cycle.

OVER CURRENT PROTECTION

The LM3450/50A has a current limit threshold (V_{LIM} = 1.5V) at CS to protect the system from over-current conditions. If V_{CS} exceeds V_{LIM}, Q_{SW} is immediately turned off until ZCD triggers a new on-time.

Copyright © 2010–2013, Texas Instruments Incorporated

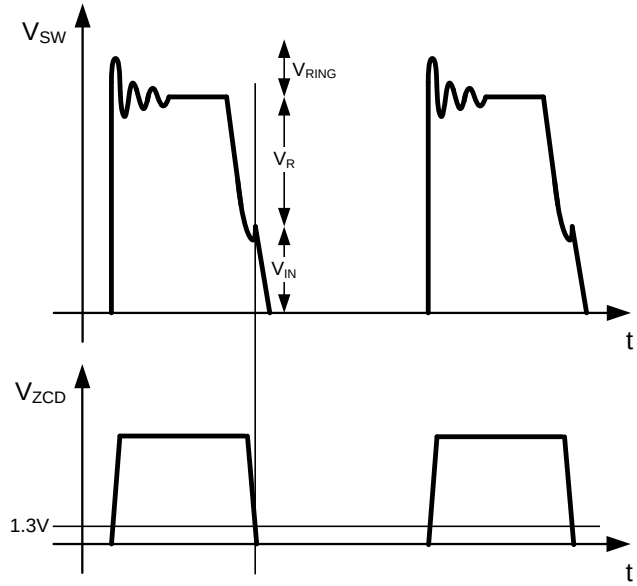

Figure 22. ZCD Waveforms for Flyback Design

ZERO CURRENT DETECTION

ZCD is implemented with a 100kΩ resistor from the ZCD pin to a coupled winding on the transformer or inductor as shown in Figure 21. This winding is also used to bootstrap V_{CC} after start-up. When Q_{SW} turns off, the voltage at the ZCD pin (V_{ZCD}) increases as energy is transferred through the auxiliary winding. The circuit arms when V_{ZCD} exceeds 1.5V. Then, when the energy is fully transferred, V_{ZCD} decreases towards zero. When V_{ZCD} falls below 1.3V, the transformer is assumed to be demagnetized, the circuit disarms, and Q_{SW} is turned back on as shown in Figure 22. The ZCD pin voltage will remain low until Q_{SW} is turned off via peak detection and the cycle repeats.

SWITCHING FREQUENCY

With a constant on-time and variable off-time, there is a variable switching frequency:

$$f_{SW} = D(t) \times \left(\frac{V_{IN\text{-}PK}}{L \times I_{P\text{-}PK}} \right) \tag{6}$$

Figure 20 shows that the minimum switching frequency occurs at the peak of the rectified AC waveform, while the maximum switching frequency occurs at the valley.

ERROR AMPLIFIER

The LM3450/50A internal error amplifier is used for non-isolated designs (boost) where the output voltage can be directly sensed, via a resistor divider, at the FB pin. The FB pin is the inverting input of the trans-conductance amplifier which is regulated to 2.5V. The COMP pin is the output of the amplifier and external compensation is placed from COMP to GND in the form of a single capacitor (C_{CMP}) as shown in Figure 21, a series resistor and capacitor, or both. The output of the amplifier sources or sinks current as necessary to force the inputs of the amplifier to be equal. The compensation method depends upon the transient performance desired and requires a loop gain analysis. This analysis can be somewhat complex and cumbersome. A detailed analysis can be found Application Notes AN-2098 (literature number SNVA463) and/or AN-2150 (literature number SNVA485).

Copyright © 2010–2013, Texas Instruments Incorporated

If the COMP pin voltage (V_{CMP}) falls below 1.4V at any time, the device enters burst mode where the GATE is off for 340µs then is turned on. If V_{CMP} is still below 1.4V at the end of the on-time then another 340µs off-time occurs. However, if V_{CMP} has risen above 1.4V, the converter continues switching until it falls below the threshold again. This feature is necessary to prevent the output of the converter from rising arbitrarily high because the minimum on-time of the device prevents less energy transfer.

The LM3450/50A also implements both feedback short circuit protection and output over-voltage protection (OVP) functions at the FB pin. If V_{FB} exceeds 3V, then OVP is engaged and the part stops switching until V_{FB} falls below 3V. In the same manner, if V_{FB} falls below 168mV, then shutdown is engaged and switching stops until V_{FB} exceeds 188mV.

The flyback topology is frequently used to provide isolation from input to output. Since, the current transfer ratio (CTR) of standard optical isolation varies over temperature, proper regulation using primary error amplifiers is difficult. An error amplifier is usually placed in the secondary to regulate the output voltage accurately. To accommodate isolated designs, the LM3450/50A internal error amplifier can be bypassed by placing a 5.11kΩ resistor from FB to GND. This engages a 5kΩ pull-up resistor from COMP to an internal 5V rail.

SECONDARY ERROR AMPLIFIER

For isolated designs, the error amplifier on the secondary should take the form of a proportional integral (PI) compensator. The amplifier is frequently implemented with an LMV431. The output voltage resistor divider (R_{FB1}, R_{FB2}) provides the sensed output voltage to the LMV431 inverting input. The PI compensation is achieved by connecting R_{SC} and C_{SC} in between the LMV431 input and output, shown in Figure 23. In addition, C_{CMP} is placed from COMP to GND on the primary for higher frequency noise attenuation.

In addition to the basic error amplifier, a soft-start circuit can be implemented using a capacitor, two diodes and a Zener diode as shown in Figure 23. This secondary softstart circuit has no restart mechanism, therefore a primary side softstart is recommended as described in the SOFTSTART section of this document.

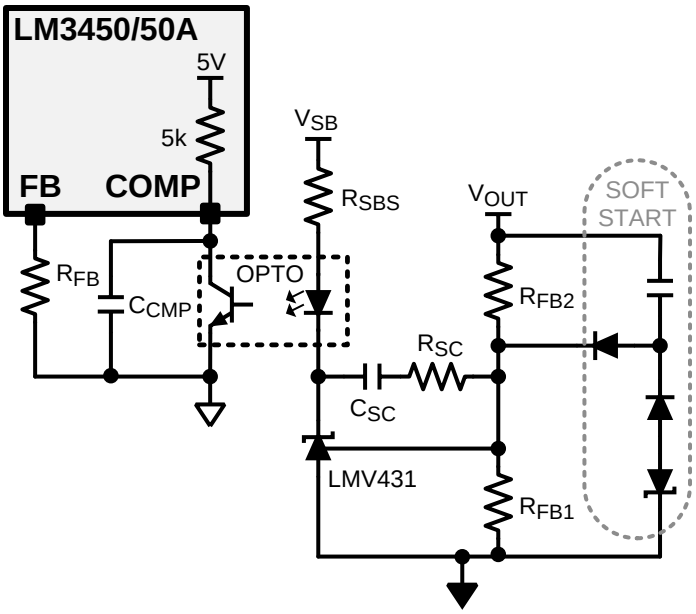

Figure 23. Secondary Error Amplifier

PRECISION VOLTAGE REFERENCE

The LM3450/50A provides a 3V voltage reference (V_{REF}) for biasing the V_{ADJ} pin as well as any external circuitry. V_{REF} is regulated once V_{CC} exceeds 3V. There is a 2mA current limit for the reference. A 10nF ceramic bypass capacitor should be placed from V_{REF} to GND.

Copyright © 2010–2013, Texas Instruments Incorporated

LOW POWER SHUTDOWN

The LM3450/50A can be placed into a low power shutdown by grounding the V_{ADJ} pin (any voltage below 75mV). During low power shutdown, the device will turn on the GATE for one cycle followed by a fixed off-time of 42µs and the cycle repeats. During shutdown, the DIM output will be high (zero light output) since the buffer rail at FLT1 will be at or near zero. This feature is designed to hold up the PFC output voltage while removing the load (turning the LEDs off).

THERMAL SHUTDOWN

Internal thermal shutdown circuitry is provided to protect the IC in the event that the maximum junction temperature is exceeded. The threshold for thermal shutdown is 160°C with a 20°C hysteresis. During thermal shutdown GATE is disabled.

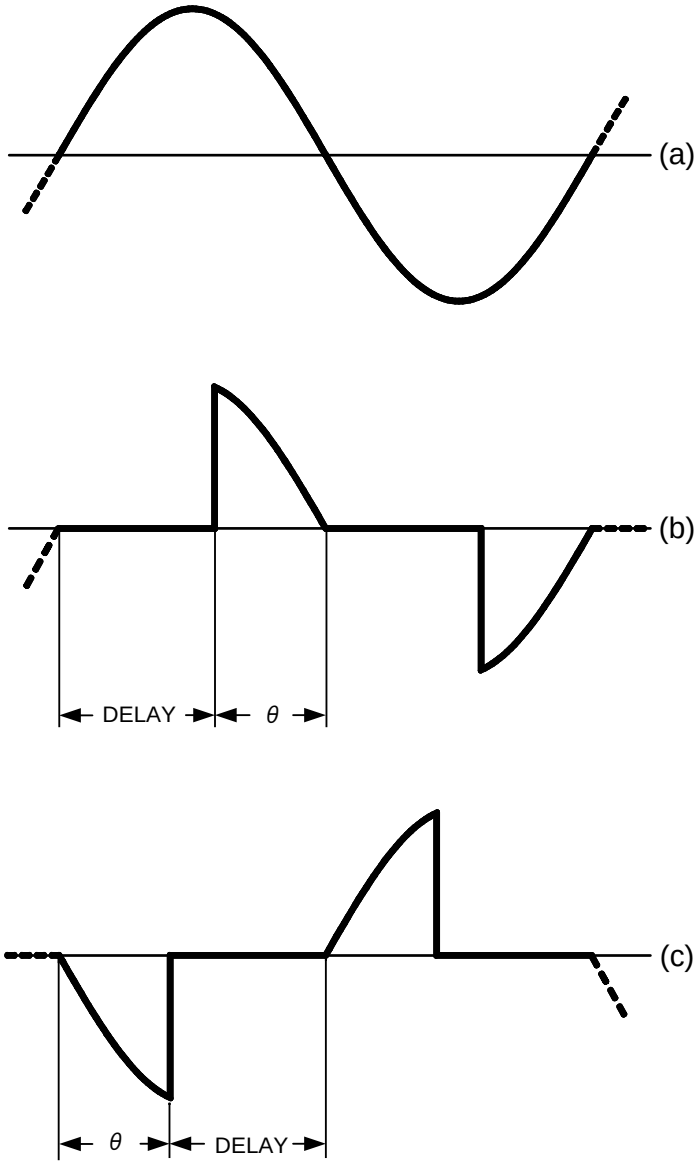

Figure 24. Phase Dimming Waveforms

PHASE DIMMER OPERATION

A simplified schematic of a phase dimmer is shown in Figure 25. An RC network consisting of R1, R2, and C1 delay the turn-on of the triac until the voltage on C1 reaches the trigger voltage of the diac. Increasing the resistance of the potentiometer (wiper moving downward) increases the turn-on delay which decreases the on-time or "conduction angle" of the triac (θ). This reduces the average power delivered to the load.

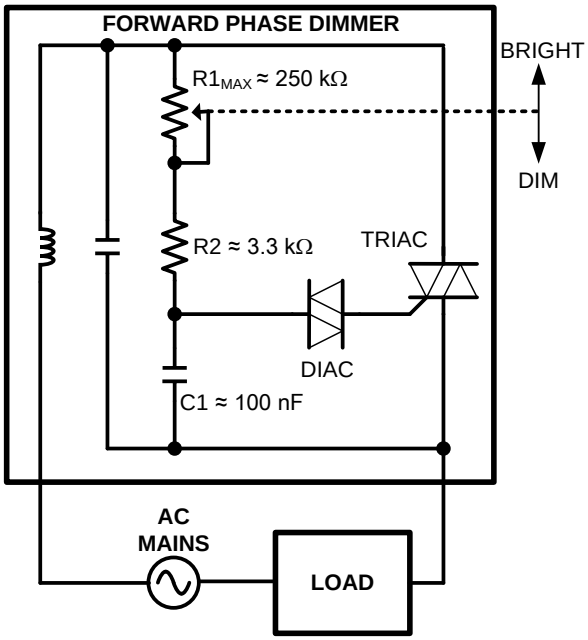

Figure 25. Basic Forward Phase Dimmer

Phase dimmer voltage waveforms are shown in Figure 24.

Figure 24a shows the full sinusoid of the input voltage. Even when set to full brightness; few dimmers will provide 100% conduction angle.

Figure 24b shows a waveform from a forward phase dimmer. The off-time can be referred to as the firing angle and is simply 180° – θ.

Figure 24c shows the waveform of a reverse phase dimmer (also called an electronic dimmer in the lighting industry). These typically or more expensive, microcontroller based dimmers that use switching devices other than triacs. Note that the conduction angle starts from the zero-crossing, and terminates some time later. This method of control reduces the noise spike at the transition.

Any form of phase dimming modulates the incoming AC waveform by chopping part of the sinusoid, reducing the average power to the load. These dimmers work very well with standard incandescent bulbs, but not with power converters. A converter attempts to regulate the load in with presence of any input, effectively ignoring the phase angle. To implement a dimmable converter, the angle must be sensed at the input, decoded and used to properly control the LED current regulator.

Copyright © 2010–2013, Texas Instruments Incorporated

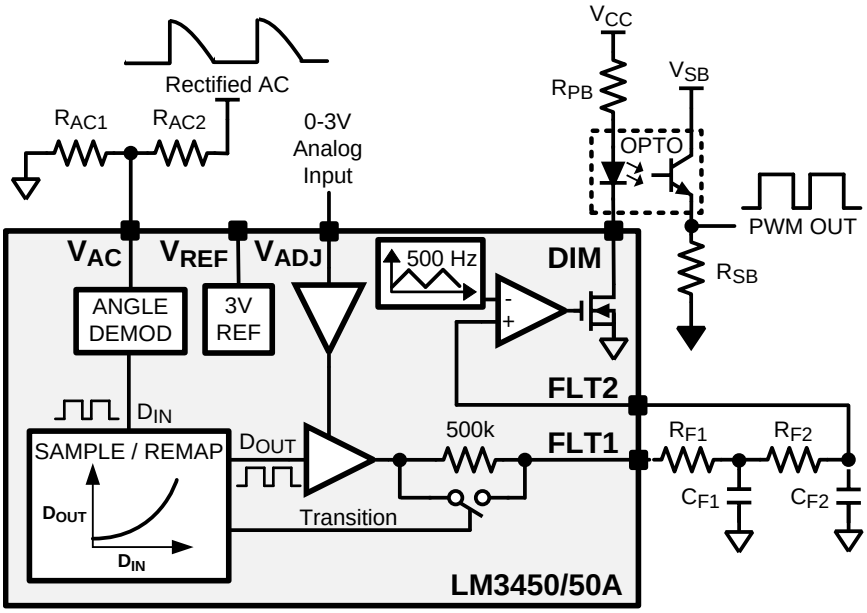

Figure 26. Dimming Decoder Circuit

PHASE DIMMING DECODER

The LM3450/50A uses the rectified AC line voltage to interpret the conduction angle. Figure 26 shows the LM3450/50A decoder circuit with associated external circuitry. The rectified AC line voltage is scaled via a resistor divider (R_{AC1}, R_{AC2}) and connected to the V_{AC} pin. V_{AC} is compared to a 356mV reference to generate a twice line frequency PWM signal with corresponding duty cycle as shown in Figure 27.

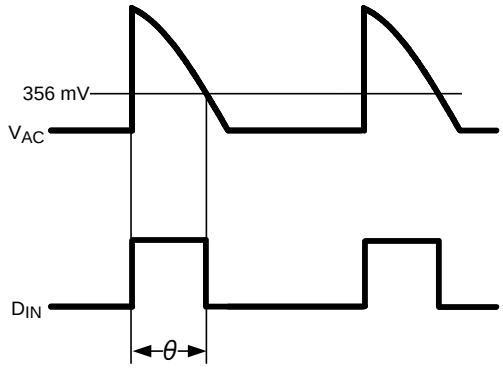

Figure 27. Phase Angle Demodulation

For best results, R_{AC1} and R_{AC2} are suggested to be sized so that the V_{AC} voltage crosses the 356mV threshold when the rectified AC line is as follows:

- 120V systems: 25V to 45V
- 230V systems: 40V to 70V

The demodulated duty cycle is sampled and logarithmically remapped to a 300Hz PWM signal improving the resolution of low dimming levels to the human eye. A minimum duty cycle limits the maximum achievable contrast ratio to approximately 70:1. The remapped PWM signal is buffered and output at FLT1 with amplitude equal to V_{ADJ} as shown in Figure 28.

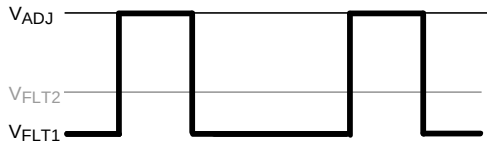

Figure 28. FLT1 to FLT2 Mapping

The FLT1 signal is routed through a 2 pole low pass filter (R_{F1}, C_{F1}, R_{F2}, C_{F2}), as shown in Figure 26, to remove the twice line frequency ripple. The resulting analog signal at FLT2 is compared to a 500Hz Triangle wave to create the inverted PWM signal at the DIM pin as shown in Figure 29:

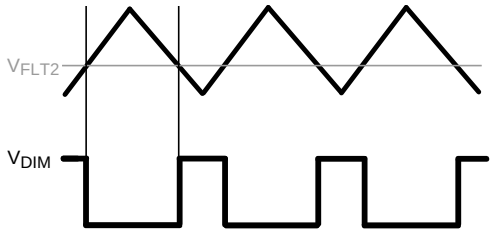

Figure 29. FLT2 to DIM Mapping

This PWM signal at the DIM pin can be used as the dim input to a secondary LED driver. DIM is an open drain output designed for isolated solutions. Optical isolation is used to transmit signals across the isolation boundary. With most opto-isolators, the edge rate is dependent on the amount of drive current through the photodiode. The open-drain configuration allows the primary bias supply (V_{CC}) to provide the current as shown in Figure 26. The choice of resistor (R_{PB}) between V_{CC} and the photodiode anode will set the drive current. This enables the user to trade-off PWM accuracy with system efficiency.

The open drain configuration also ensures that the secondary has a resistor from the phototransistor's emitter to secondary ground (not from collector to secondary bias). During system turn-off, this prevents an undesired LED blink because the secondary stage LED driver is forced off.

A variable sample rate and dynamic filter ensure fast, smooth dimming transitions (movement of the dimmer) while maintaining robust flicker-free behavior when the dimmer is static. The sample rate depends on past and present angle information. The dynamic filter is a dual mode filter. During standby mode, when a transition has not been made and the dimmer is static, a 500kΩ series resistor is connected between the buffered output and FLT1 as shown in Figure 26.

The 500kΩ resistor is shorted when the LM3450/50A senses a large transition of the dimmer. This increases the filter speed while the dimmer is transitioning between levels to improve response time.

The FLT1 and FLT2 poles created by each RC pair (R_{F1} and C_{F1}, R_{F2} and C_{F2}) should be set as follows:

- C_{F1} and C_{F2} can be 1µF ceramic capacitors for all designs.
- R_{F1} and R_{F2} should be set between 15kΩ (~10Hz) and 75kΩ (~2Hz).

2 Hz poles provide a "smooth fade" while 10Hz poles create a "snappy" response.

These component values ensure that the static filter condition in standby mode has 1 pole approximately a decade lower than the nominal in order to provide good noise immunity to the system.

Copyright © 2010–2013, Texas Instruments Incorporated

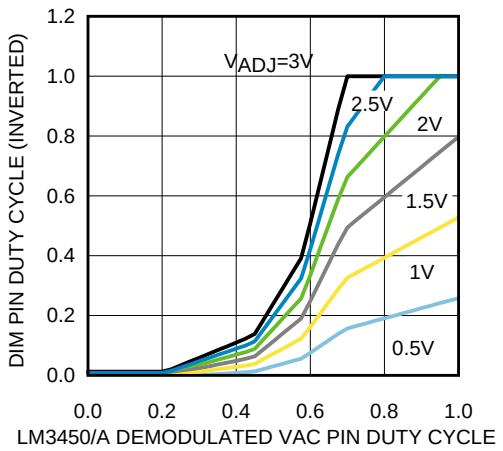

Figure 30. Complete Decoder Mapping

Since the buffered decoder output has amplitude equal to V_{ADJ} and the resulting PWM signal is filtered into an analog voltage at FLT2, the V_{ADJ} pin can be used to change the mapping as shown in Figure 30. The maximum LED current (DIM = 0) when V_{ADJ} = 3V corresponds to decoded angles of 70% or greater. Some dimmers have a maximum angle greater than this. If V_{ADJ} is reduced to 2.5V, the maximum LED current will correspond to an angle of 80% and at V_{ADJ} = 2V the maximum will occur at a decoded angle of 95%.

The V_{ADJ} pin can also be used to implement a standard analog adjust function. If the demodulated phase angle at V_{AC} is above 85%, then the fast filter is always enabled (500kΩ shorted) and the V_{ADJ} pin can solely be used to scale the DIM pin duty cycle. When V_{ADJ} is pulled below 75mV the part enters low power shutdown so the maximum attainable contrast ratio using V_{ADJ} only is approximately 40:1.

Both FLT1 and FLT2 have pull-down MosFETs that are turned on when V_{CC} UVLO falling threshold is triggered. This provides a quick discharge path for the capacitors and eliminates the possibility of an undesired light level at the next startup.

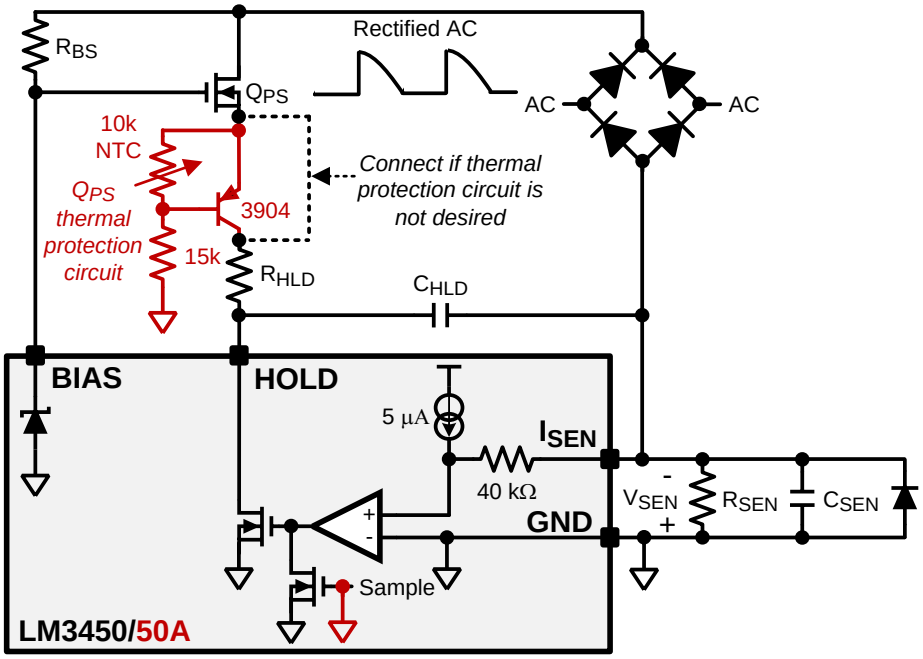

Figure 31. Dynamic Hold Circuit

DYNAMIC HOLD

A forward phase "triac" dimmer requires a minimum amount of current to be flowing through it during the entire conduction angle. This is referred to as hold current. If the minimum hold current requirement is not met, the triac will shut off (misfire). During normal operation, the converter will demand some amount of input current. However, at any point during the cycle, the input current can be low enough to cause a misfire.

During an LM3450/50A sampling period, the triac should not misfire or the decoded angle will be inaccurate as shown in Figure 32. Since the triac is asymmetrical phase-to-phase, misfires can occur at different points in the waveform. After the triac misfires, the voltage returns to zero exponentially. This can create a large difference between decoded angles which can be observed as a "fluttering" of the light.

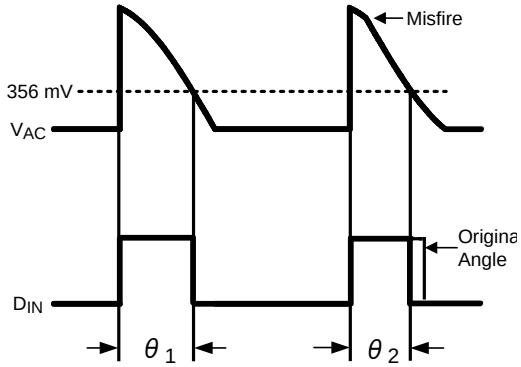

Figure 32. Forward Phase Waveform

To ensure the triac does not misfire during a sampling period and the angle is correctly decoded, a dynamic hold function is enabled. The input current is sensed with a resistor (R_{SEN}) from GND to I_{SEN} (the return of the full bridge rectifier). If the voltage across this resistor is less than 200mV, the device adds holding current via the HOLD circuitry to maintain 200mV across R_{SEN}.

The hold current is added by linearly adjusting the gate voltage of Q_{HLD} as shown in Figure 31. As the gate voltage of Q_{HLD} is increased, the HOLD pin voltage decreases, forcing a voltage across the resistance (R_{HLD}) from the source of Q_{PS} to HOLD. This extra current is drawn from the input through the triac, but is not processed by the converter. Figure 33 shows a typical dynamic hold waveform of the LM3450 where interval 1 is a non-sampled conduction angle, 2 is the firing angle, and 3 is a sampled conduction angle. It should be noted that using the LM3450A will ensure every conduction angle looks like interval 3 in Figure 33.

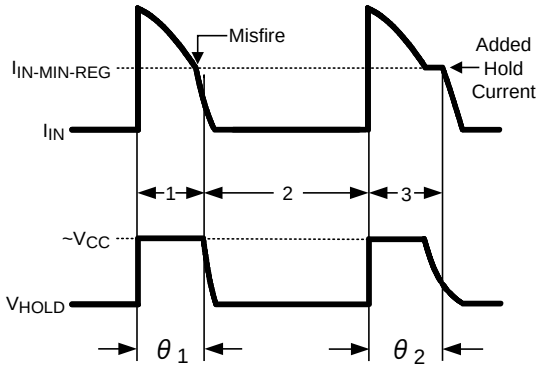

Figure 33. Dynamic Hold Waveform

Copyright © 2010–2013, Texas Instruments Incorporated

The dynamic hold function is also necessary for reverse phase dimmers, but for a different reason. Reverse phase dimmers do not use triacs, therefore they do not require a minimum "holding" current. Instead, they need what is commonly called bleeder current. When a reverse phase dimmer turns off, the AC voltage is at a high value. There is an RC time constant associated with discharging the total effective input capacitance (EMI capacitors, PFC capacitor, damper capacitance). The decoder does not record the angle until the voltage reaches the 356mV threshold. This can cause the decoded angle to be much larger than it actually is and dependent on the RC time constant as shown in Figure 34.

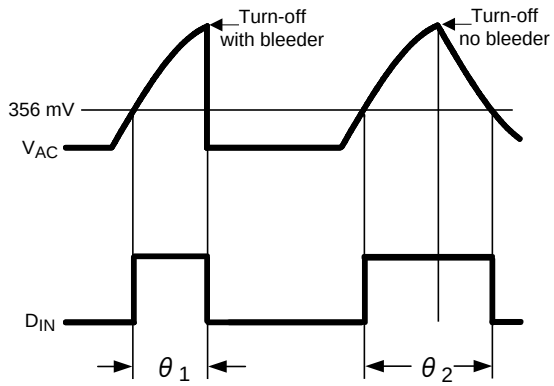

Figure 34. Reverse Phase Waveforms

The dynamic hold will quickly bleed off the excess charge in an attempt to regulate the voltage across R_{SEN}. This will preserve the accuracy of the decoded phase angle.

During the conduction angle (θ), dynamic hold is enabled only during a sample period for the LM3450. However, during the firing angle (delay time), dynamic hold is always enabled with the LM3450. This will ensure the rectified line voltage does not begin to rise due to leakage currents through the phase dimmer. Again, with the LM3450A the dynamic hold is continuously active during all conduction and firing angles.

The minimum regulated input current can be calculated:

$$I_{IN\text{-}MIN\text{-}REG} = \frac{200\ mV}{R_{SEN}} \tag{7}$$

The maximum possible additional holding current (which can occur when HOLD is still transitioning usually at the rising edge of the triac firing) can be approximated:

$$I_{HOLD\text{-}MAX} = \frac{V_{CC}}{R_{HLD} + 30\Omega} \tag{8}$$

It is recommended that the maximum hold current is set 10-15% higher than the minimum regulated input current.

A minimum of 0.1µF capacitance should be placed between I_{SEN} and HOLD to limit the bandwidth of the dynamic hold circuit to well below the switching frequency. However, if too large a capacitor is used, the bandwidth will be too low to respond to line transients. A maximum of 0.47µF should ensure good performance.

Finally, a small Schottky diode should be placed from GND to I_{SEN} to absorb the large current spikes associated with the triac firing edge. This diode should have a forward voltage above 200mV at the worst-case operating temperature so that it won't interfere with dynamic hold regulation.

Copyright © 2010–2013, Texas Instruments Incorporated

THERMAL PROTECTION

With the LM3450A, Q_{PS} has to dissipate more power than with the LM3450. During worst case conditions such as open LED load, the converter will be demanding very little current regardless of the triac position. If the phase dimmer conduction angle is large and the load is not present, Q_{PS} has to dissipate many watts since the dynamic hold is attempting to regulate the current to ten's of mA. Using the LM3450, this is nominally not a problem since it is sampling the dynamic hold infrequently. However, the LM3450A is drawing the hold current every cycle which becomes a problem very quickly. It should be noted that If the input AC line is very noisy, the VAC input to the decoder could have enough variation in steady state to cause the decoder to think the dimmer is transitioning all of the time. This would increase the sampling rate dramatically, putting much more thermal strain on the passFET in LM3450 applications as well.

To mitigate these problems, a thermal protection circuit should be implemented on the LM3450A designs (and can be on the LM3450 designs as well) as shown in red in Figure 31. The NTC thermistor should be placed on the opposite side of the PCB directly under the drain of Q_{PS}. This will provide the best thermal coupling while maintaining the necessary high voltage spacing constraints. At startup the NTC is at a high resistance value, turning the PNP fully on which provides the dynamic hold path. As the NTC heats up the resistance decreases and the base voltage increases. Eventually, the PNP will transition into linear mode and the effective resistance from collector to emitter will increase. This will decrease the maximum holding current, thereby decreasing the thermal stress on Q_{PS}. Given enough headroom, the circuit should reach thermal equilibrium in a safe controlled manner.

Since this method of thermal protection linearly reduces the maximum hold current with increasing temperature, the foldback will not be perceptible to the consumer. Instead, the result of the foldback will simply be a reduction of contrast ratio, meaning the minimum achievable LED current will increase as the temperature increases beyond the foldback level.

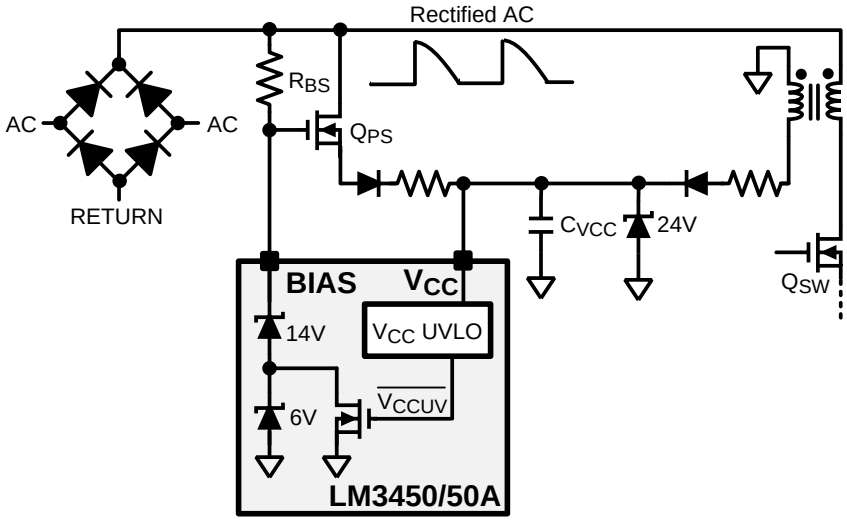

Figure 35. Primary Bias Circuitry

PRIMARY BIAS SUPPLY

The LM3450/50A requires a supply voltage at V_{CC}, not to exceed 25V. The device has V_{CC} under-voltage lockout (UVLO) with rising and falling thresholds of 12.9V and 7.9V respectively. A 24V Zener diode should be placed from the V_{CC} pin to GND to protect the device from substantial spikes that could cause damage.

Copyright © 2010–2013, Texas Instruments Incorporated

Figure 35 shows how the LM3450/50A provides a quick way to generate the necessary primary bias supply at start-up. Since the AC line peak voltage is always higher than the rating of the controller, all designs require an N-channel MosFET (passFET). The passFET (Q_{PS}) is connected with its drain attached to the rectified AC. The gate of Q_{PS} is connected to the BIAS pin which has a stack of 2 Zener diodes internal to the device. These diodes are then biased from the rectified AC line through series resistance (R_{BS}). The source of Q_{PS} is held at a V_{GS} below the Zener voltage and current flows through Q_{PS} to charge up whatever capacitance is present. If the capacitance is large enough, the source voltage will remain relatively constant over the line cycle and this becomes the input bias supply at V_{CC}.

This bias circuit enables instant turn-on. However, once the circuit is operational it is desirable to bootstrap V_{CC} to an auxiliary winding of the inductor or transformer (also used for ZCD). The two bias paths are each connected to V_{CC} through a diode to ensure the higher of the two is providing V_{CC} current. This bootstrapping greatly improves efficiency when quick start-up is necessary.

To ensure that the auxiliary winding is powering V_{CC} at all times except start-up, the LM3450/50A has a dual BIAS mode. The BIAS voltage at startup is 20V through two Zener diodes. When the V_{CC} UVLO rising threshold is exceeded and the device turns on, the BIAS pin voltage is reduced to 14V (bottom 6V Zener is shorted). Once the V_{CC} UVLO falling threshold is reached again, the BIAS pin will return to 20V to attempt to restart the device.

It should be noted that the large hysteresis of V_{CC} UVLO and the dual BIAS mode allow for a large variation of the auxiliary bias circuitry easing the design of the magnetics.

SOFTSTART

As in any off-line system, softstart is an important part of the design. Since the LM3450/50A are used with phase dimming applications, the typical startup problems are magnified since a phase dimmer is frequently turned on and off rapidly. This requires a softstart mechanism that quickly resets when the LM3450/50A turns off. Since the LM3450/50A has two distinct functional parts (PFC and phase decoder), ideally both should be softstarted simultaneously. This will ensure the most controlled start-up possible.

The circuit in Figure 36 provides this exact functionality. Both V_{ADJ} and COMP are diode or'ed into an RC charging circuit fed from V_{CC}. The reset mechanism is accomplished using an 18V Zener from BIAS, a current limiting resistor and an NPN transistor. The reset is activated when VCC uvlo falling is triggered and BIAS transitions to 20V. This discharges the RC to zero and as soon as V_{CC} uvlo rising is passed BIAS transitions to 14V again, releasing the clamp on the RC softstart circuit. The RC will charge up to the 3.9V Zener clamp (which is above the dynamic range of COMP and V_{ADJ} and become effectively out of the circuit until the next turn-off.

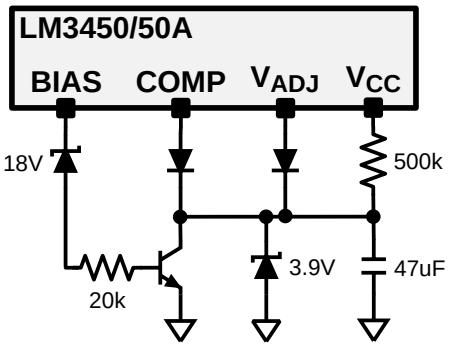

Figure 36. Dual Softstart Circuit

DESIGN INFORMATION

HOW TO SELECT THE CORRECT DEVICE (LM3450 or LM3450A)

What application(s) are suitable for the LM3450, and when is the LM3450A appropriate? The difference centers on the power dissipation in the passFET. The passFET stands off the high AC voltage from the LM3450/50A, and provides a path for the hold current. The passFET operates in the linear region and dissipates power equal to the product of the voltage across it and the current through it.

The LM3450 was designed to minimize the power dissipation in the passFET by applying holding current in a sampled form. The standby sampling rate (when the dimmer is not moving) is infrequent, allowing minimal impact on the thermal considerations of the passFET. Sampling of the dynamic hold is not desired for some applications although. An example where the sampled hold current may cause undesirable effects is the single stage flyback topology where the output of the flyback is directly connected to the LEDs. If the phase dimmer is allowed to misfire or create erratic differences in the input voltage and current waveforms, this behavior will appear as a "fluttering" of the LED light output at the sampling rate when the single stage topology is used. The light flutter is most observable at low input currents (dimming). A small perturbation in the input voltage due to phase dimmer misfire can create a visible difference in the output light. Using a secondary LED driver stage eliminates this problem.

Cost sensitive applications may drive the design to a single stage solution, and the LM3450A was developed to address this market. The LM3450A provides continuous dynamic hold current on every AC cycle preventing the phase dimmer from misfire, and the sampling frequency from appearing at the output. Another design consideration where continuous dynamic hold may be advantageous is the reduced stresses on input EMI R/C snubber networks.

The designer must pay close attention to the power loss of the passFET when using the LM3450A. Designers must consider worst case possibilities with any power conversion designs. Worst case operating conditions with the LM3450A are usually found with the largest triac holding current requirements. Many phase dimmers require 25mA-40mA of holding current, and frequently designers are choosing 50mA as their minimum holding current requirement. The passFET package for common LM3450/50A designs should be capable of dissipating between 1W and 1.5W. The pass-FET can always be increased in size and/or the hold current can be reduced. Power calculations for the dynamic hold circuit as well as effective thermal protection are both described in the DYNAMIC HOLD section.

The LM3450 and LM3450A is best differentiated in terms of the appropriate applications for each device. The Table 1 can be used as a general guide for when to use each part.

Table 1. Device Selection Guide

Product	AC Input	Output Power	Device	Topology
High End Downlight	120V	P_{OUT} < 15W	LM3450	Two Stage Design
		P_{OUT} > 15W	LM3450A	
	230V	P_{OUT} < 25W	LM3450	
		P_{OUT} > 25W	LM3450A	
Low Cost Downlight or Large High End Bulb	120V	P_{OUT} > 15W	LM3450A	Single Stage Design
	230V	P_{OUT} > 25W		

Copyright © 2010–2013, Texas Instruments Incorporated

Applications Information

See AN-2098 (literature number SNVA463) and/or AN-2150 (literature number SNVA485) for detailed design and application information.

TWO STAGE LED DRIVER – LM3450 PRIMARY AND LM3409HV SECONDARY

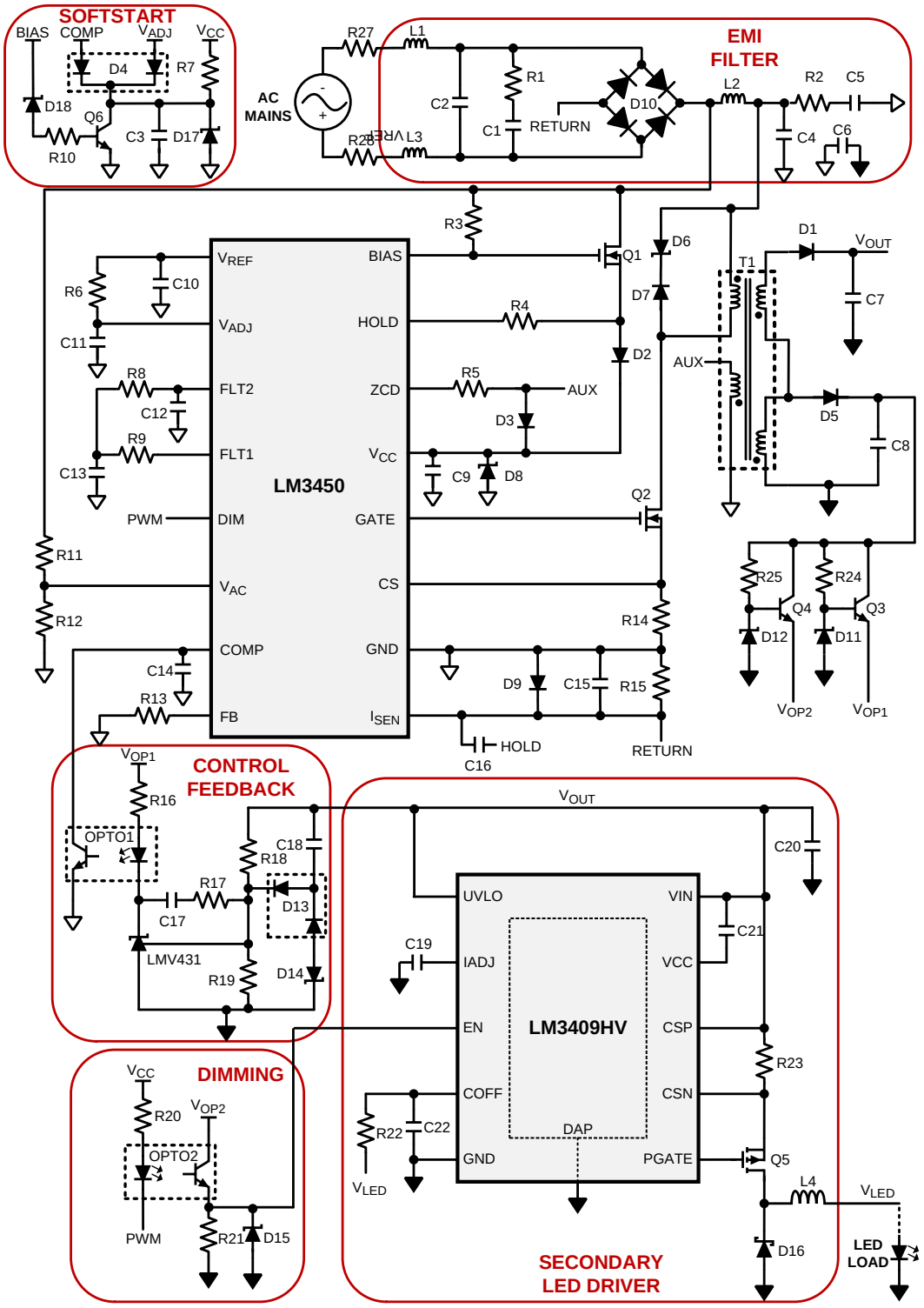

15W TWO STAGE DESIGN SPECIFICATIONS

AC Input Voltage: $120V_{AC}$ nominal ($90V_{AC}$ - $135V_{AC}$) or $230V_{AC}$ nominal ($180V_{AC}$ - $265V_{AC}$)

Regulated Flyback Output Voltage: 50V

Regulated LED Current: 350mA

LED Stack Voltage Maximum: 45V

Table 2. Bill of Materials (1)

Reference Designator		Description	Manufacturer	Part Number
LM3450		IC PFC CONT 16-TSSOP	TI	LM3450MT
LM3409HV		IC LED DRIVR 10-eMSOP	TI	LM3409HVMY
LMV431		IC SHUNT REG SOT-23	TI	LMV431AIM5
C1a, C1b, C5a, C5b	120V	CAP CER 0.22µF 250V 1210	MURATA	GRM32DR72E224KW01L
	230V	CAP CER 68nF 250V 1210	MURATA	GRM32QR72E683KW01L
C2		CAP MPY 33nF 250VAC X1 RAD	EPCOS	B32912A3333M
C3		CAP CER 47µF 6.3V 0805	TAIYO YUDEN	JMK212BJ476MG-T
C4	120V	CAP MPY 0.1µF 400V RAD	EPCOS	B32612A4104J008
	230V	CAP MPY 33nF 1000V RAD	WIMA	MKP10 - .033/1000/10
C6		CAP CER 4.7nF 500VAC Y1 RAD	EPCOS	VY1472M63Y5UQ63V0
C7a		CAP ELEC 470µF 63V RAD	NICHICON	UPW1J471MHD3
C7b, C8b, C9b, C11, C15		CAP CER 0.1µF 50V 1206	MURATA	GRM188R71H104KA93D
C8a, C9a		CAP ELEC 100µF 50V RAD	NICHICON	UHE1H101MPD
C10		CAP CER 10nF 25V 0603	MURATA	GRM188R71E103KA01D
C12, C13 C14, C21		CAP CER 1µF 16V 0603	MURATA	GRM188R71C105KA12D
C16		CAP CER 0.22µF 16V 0603	TDK	C1608X7R1C224K
C17		CAP CER 10µF 16V 1206	MURATA	GRM31CR71C106KAC7L
C18, C20		CAP CER 1µF 100V 1206	TDK	C3216X7R2A105M
C19		CAP CER 2.2µF 6.3V 0603	TDK	C1608X5R0J225M
C22		CAP CER 470pF 100V 0603	TDK	C1608C0G2A471J
D1	120V	DIODE ULTRAFAST 200V 1A SMA	FAIRCHILD	ES1D
	230V	DIODE FAST 400V 1A DO-214AC	FAIRCHILD	ES1G
D2		DIODE ULTRAFAST 200V 1A SMA	FAIRCHILD	ES1D
D3, D5		DIODE ULTRAFAST 100V 0.2A SOT-23	FAIRCHILD	MMBD914
D4		DIODE DUAL SCHOTTKY 20V 0.5A SOT-23	NXP SEMI	PMEG3005CT,215
D6	120V	DIODE TVS 150V 600W UNI SMB	LITTLEFUSE	SMBJ150A
	230V	DIODE TVS 220V 600W UNI SMB	LITTLEFUSE	SMBJ220A
D7		DIODE ULTRAFAST 600V 1A SMA	FAIRCHILD	ES1J
D8		DIODE ZENER 24V 1.5W SMA	MICRO-SEMI	SMAJ5934B-TP
D9		DIODE SCHOTTKY 20V 3A SMA	FAIRCHILD	ES2AA-13-F
D10		DIODE RECT 600V 0.5A Minidip	COMCHIP	HD06
D11, D12		DIODE ZENER 10V 500mW SOD-123	FAIRCHILD	MMSZ5240B
D13		DIODE ULTRAFAST 70V 0.2A SOT-23	FAIRCHILD	BAV99
D14		DIODE ZENER 3.3V 500mW SOD-123	ON-SEMI	MMSZ3V3T1G
D15		DIODE ZENER 1.8V 500MW SOD-123	ON-SEMI	MMSZ4678T1G
D16		DIODE SCHOTTKY 60V 2A SMB	ON-SEMI	SS26T3G
D17		DIODE ZENER 3.9V 500MW SOD-123	ON-SEMI	MMSZ4686T1G
D18		DIODE ZENER 18V 500MW SOD-123	ON-SEMI	MMSZ5248T1G
L1, L2, L3		IND SHIELD 1mH 0.46A SMT	COILCRAFT	MSS1038-105KL

(1) Components are used in both versions unless otherwise noted

Copyright © 2010–2013, Texas Instruments Incorporated

Table 2. Bill of Materials[1] (continued)

Reference Designator		Description	Manufacturer	Part Number
L4		IND SHIELD 470µH 1.06A SMT	COILCRAFT	MSS1278-474KLB
Q1		MOSFET N-CH 800V 3A DPAK	ST MICRO	STD4NK80ZT4
Q2	120V	MOSFET N-CH 600V 4.4A DPAK	INFINEON	IPD60R950C6
	230V	MOSFET N-CH 800V 3A DPAK	ST MICRO	STD4NK80ZT4
Q3, Q4		TRANS NPN 40V 0.6A SOT-23	FAIRCHILD	MMBT4401
Q5		MOSFET P-CH 70V 5.7A DPAK	ZETEX	ZXMP7A17K
Q6		TRANS PNP 40V 0.2A SOT-23	FAIRCHILD	MMBT3904
R1	120V	RES 330Ω 5% 1W 2512	VISHAY	CRCW2512330RJNEG
	230V	RES 510Ω 5% 1W 2512	VISHAY	CRCW2512510RJNEG
R2	120V	RES 430Ω 5% 1W 2512	VISHAY	CRCW2512430RJNEG
	230V	RES 1.6kΩ 5% 1W 2512	VISHAY	CRCW25121K60JNEG
R3	120V	RES 402kΩ 1% 0.25W 1206	VISHAY	CRCW1206402KFKEA
	230V	RES 953kΩ 1% 0.25W 1206	VISHAY	CRCW1206953KFKEA
R4		RES 100Ω 1% 1W 2512	VISHAY	WSL2512100RFKEA
R5		RES 100kΩ 1% 0.1W 0603	VISHAY	CRCW0603100KFKEA
R6		RES 6.04kΩ 1% 0.1W 0603	VISHAY	CRCW06036K04FKEA
R7		RES 499kΩ 1% 0.1W 0603	VISHAY	CRCW0603499KFKEA
R8, R9		RES 75.0kΩ 1% 0.1W 0603	VISHAY	CRCW060375K0FKEA
R10		RES 20.0kΩ 1% 0.1W 0603	VISHAY	CRCW060320K0FKEA
R11	120V	RES 1.00MΩ 1% 0.25W 1206	VISHAY	CRCW12061M00FKEA
	230V	RES 2.00MΩ 1% 0.25W 1206	VISHAY	CRCW12062M00FKEA
R12		RES 15.0kΩ 1% 0.1W 0603	VISHAY	CRCW060315K0FKEA
R13		RES 5.11kΩ 1% 0.1W 0603	VISHAY	CRCW06035K11FKEA
R14a		RES 10Ω 1% 0.25W 1206	VISHAY	CRCW120610R0FKEA
R14b		RES 1.00Ω 1% 0.33W 1210	VISHAY	CRCW12101R00FNEA
R15a, R15b		RES 5.62Ω 1% 0.25W 1206	VISHAY	CRCW12065R62FNEA
R16		RES 2.00kΩ 1% 0.125W 0805	VISHAY	CRCW08052K00FKEA
R17	120V	RES 20.0kΩ 1% 0.1W 0603	VISHAY	CRCW060320K0FKEA
	230V	RES 10.0kΩ 1% 0.1W 0603	VISHAY	CRCW060310K0FKEA
R18		RES 105kΩ 1% 0.125W 0805	VISHAY	CRCW0805105KFKEA
R19		RES 2.67kΩ 1% 0.1W 0603	VISHAY	CRCW06032K67FKEA
R20		RES 6.04kΩ 1% 0.125W 0805	VISHAY	CRCW08056K04FKEA
R21		RES 10.0kΩ 1% 0.125W 0805	VISHAY	CRCW080510K0FKEA
R22		RES 80.6kΩ 1% 0.1W 0603	VISHAY	CRCW060380K6FKEA
R23		RES .62Ω 1% 0.5 2010 SMD	ROHM	MCR50JZHFLR620
R24, R25		RES 10kΩ 1% 0.1W 0603	VISHAY	CRCW060310K0FKEA
R27, R28	120V	RES 10Ω 10% 2W FILM	WELWYN	EMC2-10R0
	230V	RES 22Ω 10% 2W FILM	WELWYN	EMC2-22R0
OPTO1, OPTO2		OPTO-ISOLATOR SMD	LITE ON	CNY17F-3S
T1	120V	XFORMER 120V 15W OUTPUT 50V	WURTH	750813550
	230V	XFORMER 230V 15W OUTPUT 50V	WURTH	750817550

Copyright © 2010–2013, Texas Instruments Incorporated

SINGLE STAGE LED DRIVER – LM3450A FLYBACK

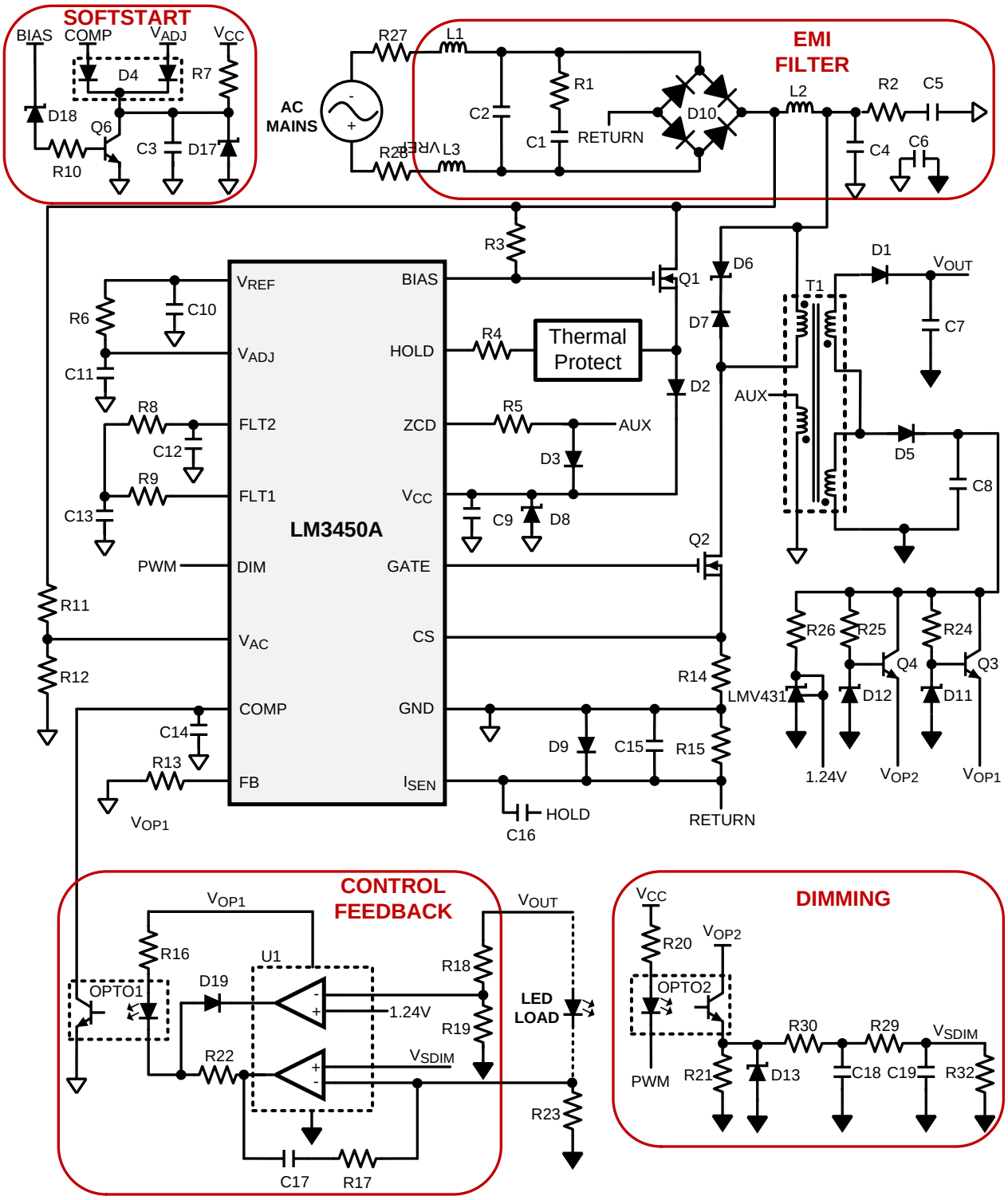

Copyright © 2010–2013, Texas Instruments Incorporated

30W SINGLE STAGE DESIGN SPECIFICATIONS

AC Input Voltage: $120V_{AC}$ nominal ($90V_{AC}$ - $135V_{AC}$) or $230V_{AC}$ nominal ($180V_{AC}$ - $265V_{AC}$)

Flyback Output Voltage Maximum: 60V

Regulated LED Current: 700mA

Table 3. Bill of Materials(1)

Reference Designator		Description	Manufacturer	Part Number
LM3450A		IC PFC CONT 16-TSSOP	TI	LM3450AMT
LMV431		IC SHUNT REG SOT-23	TI	LMV431AIM5
U1		IC DUAL OP-AMP	TI	LM2904
C1a, C1b, C1c, C5a, C5b, C5c	120V	CAP CER 0.22µF 250V 1210	MURATA	GRM32DR72E224KW01L
	230V	CAP CER 68nF 250V 1210	MURATA	GRM32QR72E683KW01L
C2		CAP MPY 33nF 250VAC X1 RAD	EPCOS	B32912A3333M
C3		CAP CER 47µF 6.3V 0805	TAIYO YUDEN	JMK212BJ476MG-T
C4	120V	CAP MPY 0.22µF 400V RAD	WIMA	MKP10-.22/400/20
	230V	CAP MPY 62nF 1000V RAD	VISHAY	BFC238330623
C6		CAP CER 4.7nF 500VAC Y1 RAD	EPCOS	VY1472M63Y5UQ63V0
C7a		CAP ELEC 1mF 63V RAD	NICHICON	UPW1J102MHD
C7b, C8b, C9b, C11, C15		CAP CER 0.1µF 50V 1206	MURATA	GRM188R71H104KA93D
C8a, C9a		CAP ELEC 220µF 50V RAD	NICHICON	UHE1H221MPD
C10		CAP CER 10nF 25V 0603	MURATA	GRM188R71E103KA01D
C12, C13, C14, C18, C19		CAP CER 1µF 16V 0603	MURATA	GRM188R71C105KA12D
C16		CAP CER 0.22µF 16V 0603	TDK	C1608X7R1C224K
C17		CAP CER 10µF 16V 1206	MURATA	GRM31CR71C106KAC7L
D1a, D1b	120V	DIODE ULTRAFAST 200V 1A SMA	FAIRCHILD	ES1D
	230V	DIODE FAST 400V 1A DO-214AC	FAIRCHILD	ES1G
D2		DIODE ULTRAFAST 200V 1A SMA	FAIRCHILD	ES1D
D3, D5		DIODE ULTRAFAST 100V 0.2A SOT-23	FAIRCHILD	MMBD914
D4		DIODE DUAL SCHOTTKY 20V 0.5A SOT-23	NXP SEMI	PMEG3005CT,215
D6	120V	DIODE TVS 150V 600W UNI SMB	LITTLEFUSE	SMBJ150A
	230V	DIODE TVS 220V 600W UNI SMB	LITTLEFUSE	SMBJ220A
D7		DIODE ULTRAFAST 600V 1A SMA	FAIRCHILD	ES1J
D8		DIODE ZENER 24V 1.5W SMA	MICRO-SEMI	SMAJ5934B-TP
D9		DIODE SCHOTTKY 20V 3A SMA	FAIRCHILD	ES2AA-13-F
D10		DIODE RECT 600V 0.5A Minidip	COMCHIP	HD06
D11, D12		DIODE ZENER 10V 500mW SOD-123	FAIRCHILD	MMSZ5240B
D13		DIODE ZENER 1.8V 500MW SOD-123	ON-SEMI	MMSZ4678T1G
D17		DIODE ZENER 3.9V 500MW SOD-123	ON-SEMI	MMSZ4686T1G
D18		DIODE ZENER 18V 500MW SOD-123	ON-SEMI	MMSZ5248T1G
D19		DIODE SCHOTTKY 30V 200mA SOT-23	FAIRCHILD	BAT54
L1		IND LINE FILTER 6mH 0.3A 11M	PANASONIC	ELF-11M030E
L1, L2, L3		IND SHIELD 1mH 1.18A SMT	COILCRAFT	MSS1278-105KL
L4		IND SHIELD 270µH 2.34A SMT	COILCRAFT	MSS1278-274KLB
Q1		MOSFET N-CH 800V 3A DPAK	ST MICRO	STD4NK80ZT4
Q2	120V	MOSFET N-CH 500V 9A DPAK	ST MICRO	STD11NM50N
	230V	MOSFET N-CH 800V 6A DPAK	INFINEON	SPD06N80C3
Q3, Q4		TRANS NPN 40V 0.6A SOT-23	FAIRCHILD	MMBT4401
Q6		TRANS NPN 40V 0.2A SOT-23	FAIRCHILD	MMBT3904

(1) Components are used in both versions unless otherwise noted

Copyright © 2010–2013, Texas Instruments Incorporated

Table 3. Bill of Materials[1] (continued)

Reference Designator		Description	Manufacturer	Part Number
R1	120V	RES 330Ω 5% 1W 2512	VISHAY	CRCW2512330RJNEG
	230V	RES 510Ω 5% 1W 2512	VISHAY	CRCW2512510RJNEG
R2	120V	RES 430Ω 5% 1W 2512	VISHAY	CRCW2512430RJNEG
	230V	RES 1.6kΩ 5% 1W 2512	VISHAY	CRCW25121K60JNEG
R3	120V	RES 402kΩ 1% 0.25W 1206	VISHAY	CRCW1206402KFKEA
	230V	RES 953kΩ 1% 0.25W 1206	VISHAY	CRCW1206953KFKEA
R4		RES 100Ω 1% 1W 2512	VISHAY	WSL2512100RFKEA
R5		RES 100kΩ 1% 0.1W 0603	VISHAY	CRCW0603100KFKEA
R6		RES 6.04kΩ 1% 0.1W 0603	VISHAY	CRCW06036K04FKEA
R7		RES 499kΩ 1% 0.1W 0603	VISHAY	CRCW0603499KFKEA
R8, R9		RES 49.9kΩ 1% 0.1W 0603	VISHAY	CRCW060349K9FKEA
R10		RES 20kΩ 1% 0.1W 0603	VISHAY	CRCW060320K0FKEA
R11	120V	RES 1.00MΩ 1% 0.25W 1206	VISHAY	CRCW12061M00FKEA
	230V	RES 2.00MΩ 1% 0.25W 1206	VISHAY	CRCW12062M00FKEA
R12		RES 15.0kΩ 1% 0.1W 0603	VISHAY	CRCW060315K0FKEA
R13		RES 5.11kΩ 1% 0.1W 0603	VISHAY	CRCW06035K11FKEA
R14a, R14b, R23a, R23b, R23c		RES 1.00Ω 1% 0.33W 1206	VISHAY	CRCW12061R00FKEA
R15a, R15b		RES 5.62Ω 1% 0.25W 1206	VISHAY	CRCW12065R62FKEA
R16		RES 1.00kΩ 1% 0.125W 0805	VISHAY	CRCW08051K00FKEA
R17	120V	RES 30.1kΩ 1% 0.1W 0603	VISHAY	CRCW060330K1FKEA
	230V	RES 15.0kΩ 1% 0.1W 0603	VISHAY	CRCW060315K0FKEA
R18		RES 105kΩ 1% 0.125W 0805	VISHAY	CRCW0805105KFKEA
R19		RES 2.49kΩ 1% 0.1W 0603	VISHAY	CRCW06035K49FKEA
R20		RES 6.04kΩ 1% 0.125W 0805	VISHAY	CRCW08056K04FKEA
R21		RES 10.0kΩ 1% 0.125W 0805	VISHAY	CRCW080510K0FKEA
R22		RES 1.4kΩ 1% 0.125W 0805	VISHAY	CRCW08051K40FKEA
R24, R25		RES 10kΩ 1% 0.1W 0603	VISHAY	CRCW060310K0FKEA
R26	120V	RES 2.49kΩ 1% 0.125W 0805	VISHAY	CRCW08052K49FKEA
	230V	RES 4.99kΩ 1% 0.125W 0805	VISHAY	CRCW08054K99FKEA
R27, R28	120V	RES 5Ω 10% 3W WIREWOUND	VISHAY	PAC300005008FAC000
	230V	RES 10Ω 10% 3W WIREWOUND	VISHAY	PAC300001009FAC000
R29, R30		RES 4.99kΩ 1% 0.1W 0603	VISHAY	CRCW06034K99FKEA
R32		RES 909Ω 1% 0.1W 0603	VISHAY	CRCW0603909RFKEA
OPTO1, OPTO2		OPTO-ISOLATOR SMD	LITE ON	CNY17F-3S
T1	120V	XFORMER 120V 30W OUTPUT 50V	WURTH	750813651
	230V	XFORMER 230V 30W OUTPUT 50V	WURTH	750817651
Thermal Protect		see DYNAMIC HOLD section		

Copyright © 2010–2013, Texas Instruments Incorporated

REVISION HISTORY

Changes from Revision C (May 2013) to Revision D	Page
• Changed layout of National Data Sheet to TI format	32

PACKAGING INFORMATION

Orderable Device	Status (1)	Package Type	Package Drawing	Pins	Package Qty	Eco Plan (2)	Lead/Ball Finish (6)	MSL Peak Temp (3)	Op Temp (°C)	Device Marking (4/5)	Samples
LM3450AMT/NOPB	ACTIVE	TSSOP	PW	16	92	Green (RoHS & no Sb/Br)	CU NIPDAU | CU SN	Level-1-260C-UNLIM		LM3450 AMT	Samples
LM3450AMTX/NOPB	ACTIVE	TSSOP	PW	16	2500	Green (RoHS & no Sb/Br)	CU NIPDAU | CU SN	Level-1-260C-UNLIM		LM3450 AMT	Samples
LM3450MT/NOPB	ACTIVE	TSSOP	PW	16	92	Green (RoHS & no Sb/Br)	CU NIPDAU | CU SN	Level-1-260C-UNLIM	-40 to 125	LM3450 MT	Samples
LM3450MTX/NOPB	ACTIVE	TSSOP	PW	16	2500	Green (RoHS & no Sb/Br)	CU NIPDAU | CU SN	Level-1-260C-UNLIM	-40 to 125	LM3450 MT	Samples

(1) The marketing status values are defined as follows:
ACTIVE: Product device recommended for new designs.
LIFEBUY: TI has announced that the device will be discontinued, and a lifetime-buy period is in effect.
NRND: Not recommended for new designs. Device is in production to support existing customers, but TI does not recommend using this part in a new design.
PREVIEW: Device has been announced but is not in production. Samples may or may not be available.
OBSOLETE: TI has discontinued the production of the device.

(2) Eco Plan - The planned eco-friendly classification: Pb-Free (RoHS), Pb-Free (RoHS Exempt), or Green (RoHS & no Sb/Br) - please check http://www.ti.com/productcontent for the latest availability information and additional product content details.
TBD: The Pb-Free/Green conversion plan has not been defined.
Pb-Free (RoHS): TI's terms "Lead-Free" or "Pb-Free" mean semiconductor products that are compatible with the current RoHS requirements for all 6 substances, including the requirement that lead not exceed 0.1% by weight in homogeneous materials. Where designed to be soldered at high temperatures, TI Pb-Free products are suitable for use in specified lead-free processes.
Pb-Free (RoHS Exempt): This component has a RoHS exemption for either 1) lead-based flip-chip solder bumps used between the die and package, or 2) lead-based die adhesive used between the die and leadframe. The component is otherwise considered Pb-Free (RoHS compatible) as defined above.
Green (RoHS & no Sb/Br): TI defines "Green" to mean Pb-Free (RoHS compatible), and free of Bromine (Br) and Antimony (Sb) based flame retardants (Br or Sb do not exceed 0.1% by weight in homogeneous material)

(3) MSL, Peak Temp. - The Moisture Sensitivity Level rating according to the JEDEC industry standard classifications, and peak solder temperature.

(4) There may be additional marking, which relates to the logo, the lot trace code information, or the environmental category on the device.

(5) Multiple Device Markings will be inside parentheses. Only one Device Marking contained in parentheses and separated by a "~" will appear on a device. If a line is indented then it is a continuation of the previous line and the two combined represent the entire Device Marking for that device.

(6) Lead/Ball Finish - Orderable Devices may have multiple material finish options. Finish options are separated by a vertical ruled line. Lead/Ball Finish values may wrap to two lines if the finish value exceeds the maximum column width.

Important Information and Disclaimer: The information provided on this page represents TI's knowledge and belief as of the date that it is provided. TI bases its knowledge and belief on information provided by third parties, and makes no representation or warranty as to the accuracy of such information. Efforts are underway to better integrate information from third parties. TI has taken and continues to take reasonable steps to provide representative and accurate information but may not have conducted destructive testing or chemical analysis on incoming materials and chemicals. TI and TI suppliers consider certain information to be proprietary, and thus CAS numbers and other limited information may not be available for release.

In no event shall TI's liability arising out of such information exceed the total purchase price of the TI part(s) at issue in this document sold by TI to Customer on an annual basis.

TAPE AND REEL INFORMATION

REEL DIMENSIONS

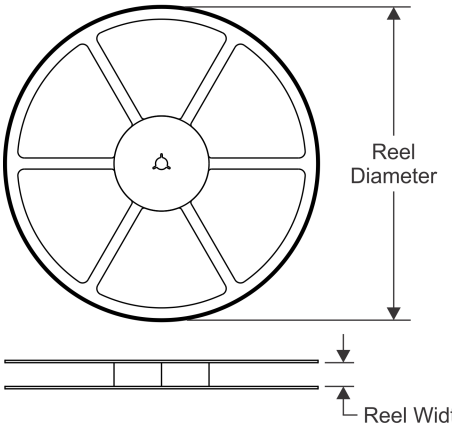

TAPE DIMENSIONS

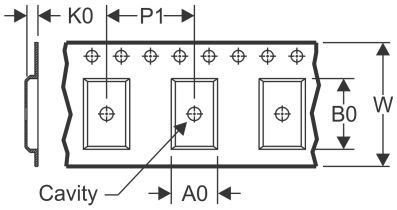

A0	Dimension designed to accommodate the component width
B0	Dimension designed to accommodate the component length
K0	Dimension designed to accommodate the component thickness
W	Overall width of the carrier tape
P1	Pitch between successive cavity centers

QUADRANT ASSIGNMENTS FOR PIN 1 ORIENTATION IN TAPE

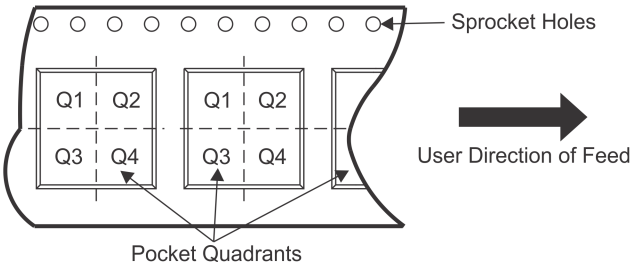

*All dimensions are nominal

Device	Package Type	Package Drawing	Pins	SPQ	Reel Diameter (mm)	Reel Width W1 (mm)	A0 (mm)	B0 (mm)	K0 (mm)	P1 (mm)	W (mm)	Pin1 Quadrant
LM3450AMTX/NOPB	TSSOP	PW	16	2500	330.0	12.4	6.95	5.6	1.6	8.0	12.0	Q1
LM3450MTX/NOPB	TSSOP	PW	16	2500	330.0	12.4	6.95	5.6	1.6	8.0	12.0	Q1

TAPE AND REEL BOX DIMENSIONS

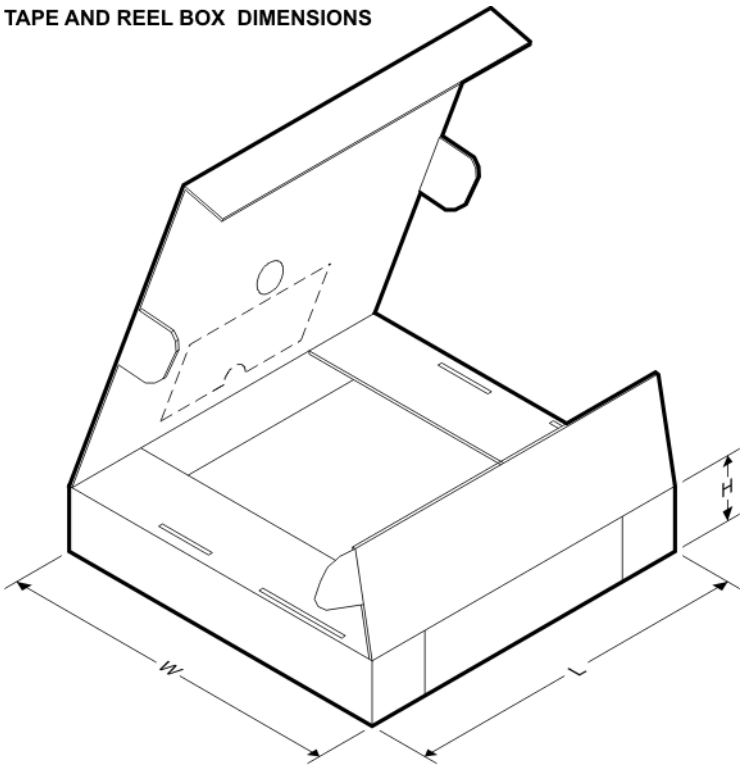

*All dimensions are nominal

Device	Package Type	Package Drawing	Pins	SPQ	Length (mm)	Width (mm)	Height (mm)
LM3450AMTX/NOPB	TSSOP	PW	16	2500	367.0	367.0	35.0
LM3450MTX/NOPB	TSSOP	PW	16	2500	367.0	367.0	35.0

PW0016A

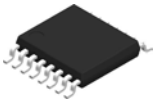

PACKAGE OUTLINE

TSSOP - 1.2 mm max height

SMALL OUTLINE PACKAGE

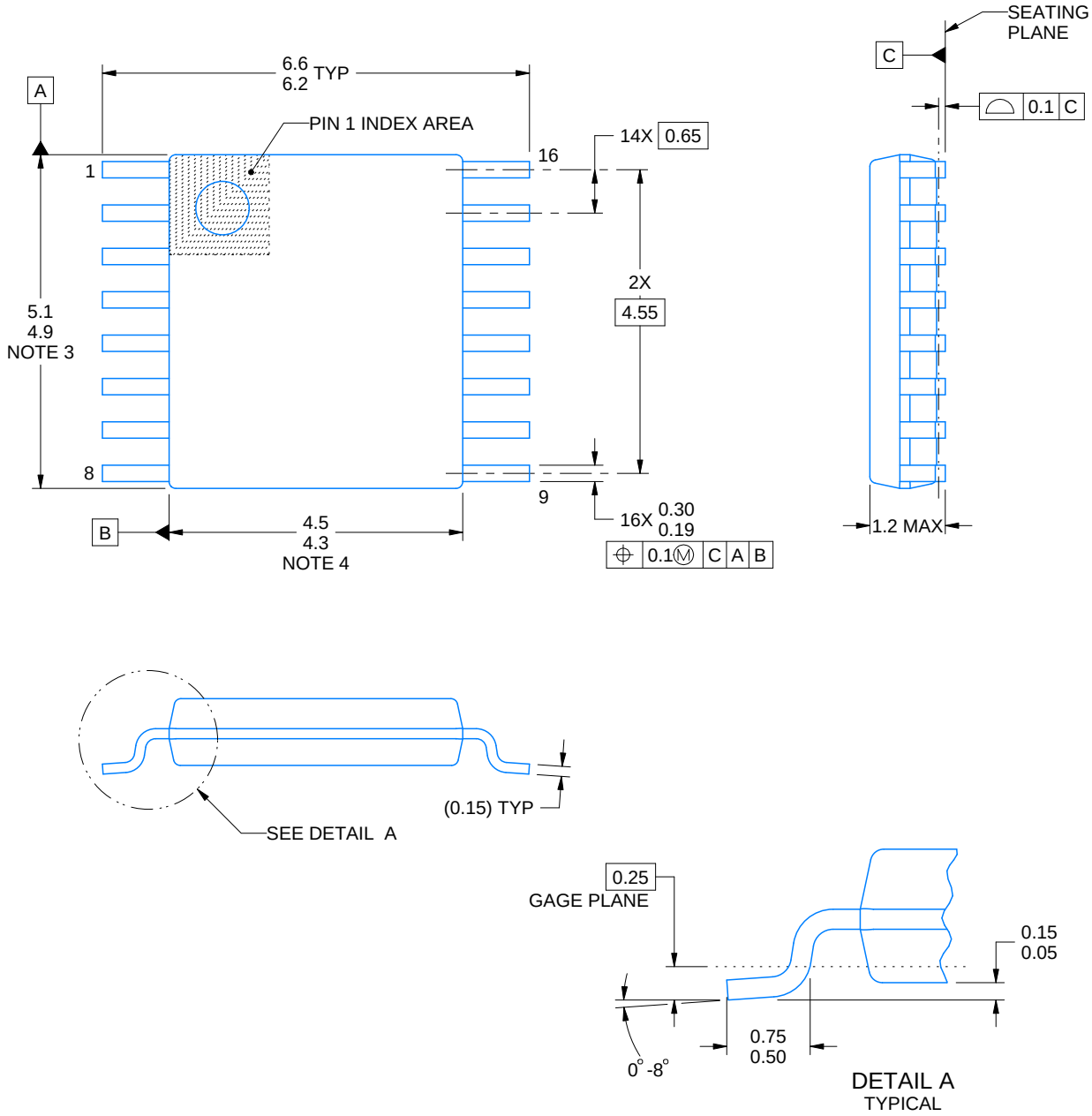

NOTES:

1. All linear dimensions are in millimeters. Any dimensions in parenthesis are for reference only. Dimensioning and tolerancing per ASME Y14.5M.
2. This drawing is subject to change without notice.
3. This dimension does not include mold flash, protrusions, or gate burrs. Mold flash, protrusions, or gate burrs shall not exceed 0.15 mm per side.
4. This dimension does not include interlead flash. Interlead flash shall not exceed 0.25 mm per side.
5. Reference JEDEC registration MO-153.

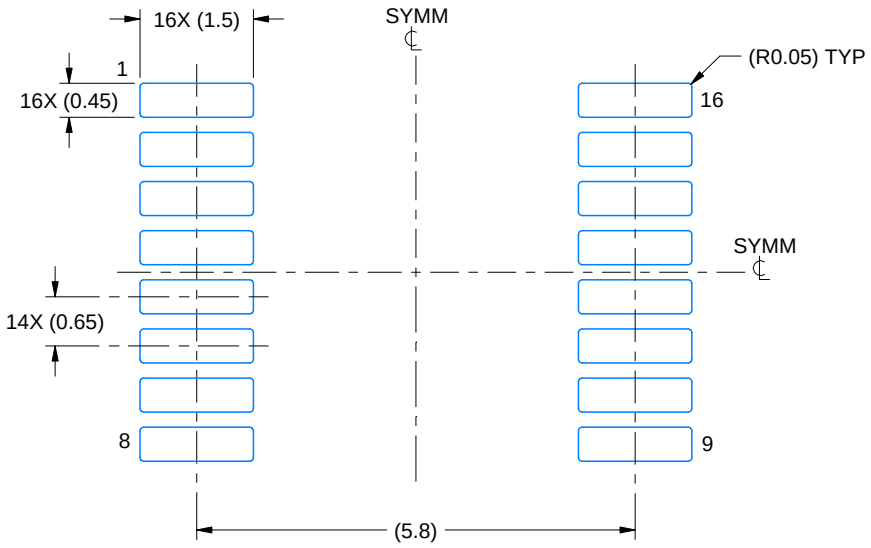

LAND PATTERN EXAMPLE
EXPOSED METAL SHOWN
SCALE: 10X

NON-SOLDER MASK DEFINED (PREFERRED)

SOLDER MASK DEFINED

SOLDER MASK DETAILS

4220204/A 02/2017

NOTES: (continued)

6. Publication IPC-7351 may have alternate designs.
7. Solder mask tolerances between and around signal pads can vary based on board fabrication site.

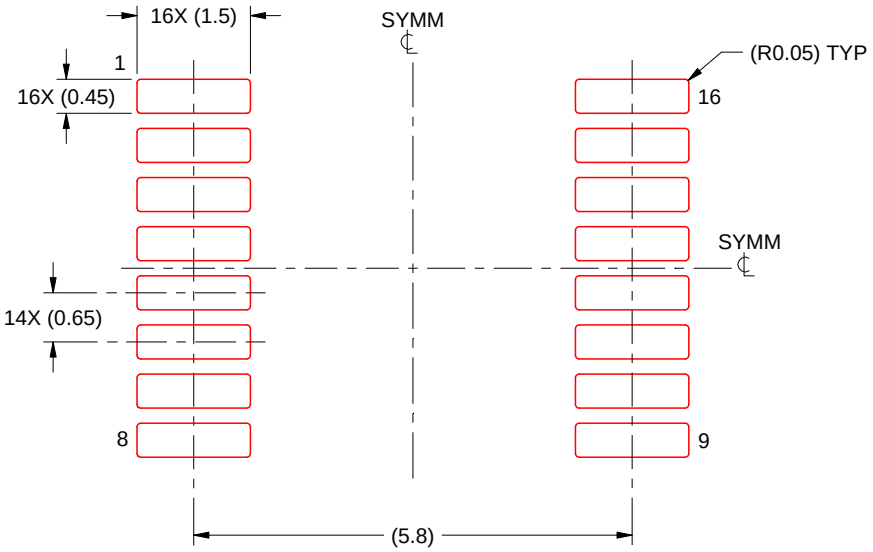

SOLDER PASTE EXAMPLE
BASED ON 0.125 mm THICK STENCIL
SCALE: 10X

4220204/A 02/2017

NOTES: (continued)

8. Laser cutting apertures with trapezoidal walls and rounded corners may offer better paste release. IPC-7525 may have alternate design recommendations.
9. Board assembly site may have different recommendations for stencil design.

IMPORTANT NOTICE AND DISCLAIMER

TI PROVIDES TECHNICAL AND RELIABILITY DATA (INCLUDING DATASHEETS), DESIGN RESOURCES (INCLUDING REFERENCE DESIGNS), APPLICATION OR OTHER DESIGN ADVICE, WEB TOOLS, SAFETY INFORMATION, AND OTHER RESOURCES “AS IS” AND WITH ALL FAULTS, AND DISCLAIMS ALL WARRANTIES, EXPRESS AND IMPLIED, INCLUDING WITHOUT LIMITATION ANY IMPLIED WARRANTIES OF MERCHANTABILITY, FITNESS FOR A PARTICULAR PURPOSE OR NON-INFRINGEMENT OF THIRD PARTY INTELLECTUAL PROPERTY RIGHTS.

These resources are intended for skilled developers designing with TI products. You are solely responsible for (1) selecting the appropriate TI products for your application, (2) designing, validating and testing your application, and (3) ensuring your application meets applicable standards, and any other safety, security, or other requirements. These resources are subject to change without notice. TI grants you permission to use these resources only for development of an application that uses the TI products described in the resource. Other reproduction and display of these resources is prohibited. No license is granted to any other TI intellectual property right or to any third party intellectual property right. TI disclaims responsibility for, and you will fully indemnify TI and its representatives against, any claims, damages, costs, losses, and liabilities arising out of your use of these resources.

TI’s products are provided subject to TI’s Terms of Sale (www.ti.com/legal/termsofsale.html) or other applicable terms available either on ti.com or provided in conjunction with such TI products. TI’s provision of these resources does not expand or otherwise alter TI’s applicable warranties or warranty disclaimers for TI products.

Mailing Address: Texas Instruments, Post Office Box 655303, Dallas, Texas 75265
Copyright © 2018, Texas Instruments Incorporated

Looking for pricing, stock, or lifecycle information?

Click below to explore more details on WIN SOURCE:

- View LM3450MT/NOPB on WIN SOURCE
- Texas Instruments Information

Optimize Your Supply Chain with WIN SOURCE Solutions

- Global Sourcing Solution
- Obsolete Management
- Cost Control Management
- Shortage Management
- Alternative Solution
- Excess Inventory Management