THE DATASHEET OF

ACPM-9374140-TR1

www.win-source.net 0086-755-83957316

ACPM-9374140-TR1

3×4 LTE B7 and B41 (B38) and B40 Tri-band Power Amplifier Module

Product Brief

Description

The ACPM-9374140 is a tri-band PA (power amplifier) that supports LTE bands 7, 41 (38), 40.

Input and output terminals are internally matched to 50 ohms. The power amplifier is manufactured on an advanced InGaP HBT technology that offers state-of-the-art reliability, temperature stability, and ruggedness. This module is housed in a cost effective, extremely small and thin 3 mm × 4mm package.

Features

- Tri-band PA supporting LTE B7 and B38 (B41) and B40
- Thin package (1.0 mm typical)
- Excellent linearity in average power tracking mode
- MIPI RFFE interface
- 20-pin surface mounting package
- Internal 50-ohm matching networks for both RF input and output
- Green –Lead-free and RoHS compliant

Applications

- LTE B7 and B38 (B41) and B40 tri -band handsets, wireless USB data card dongles, and embedded data cards

Ordering Information

Part Number	Number of Devices	Container
ACPM-9374140-TR1	1000	Tape and reel (7 in.)

Package Dimensions

The dimensions are in millimeters.

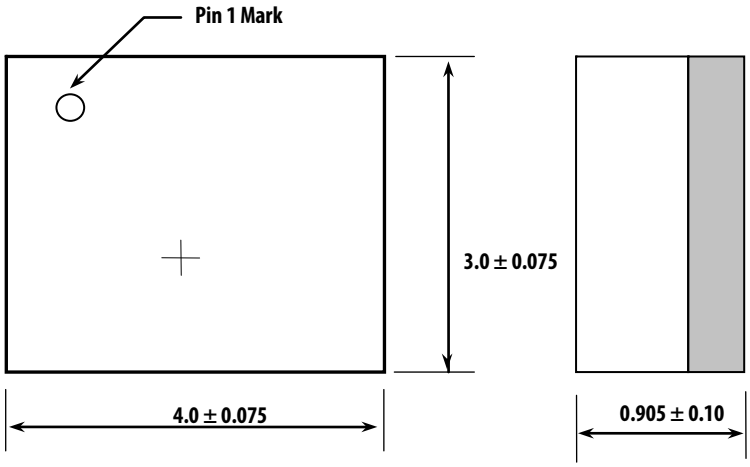

Marking Specification

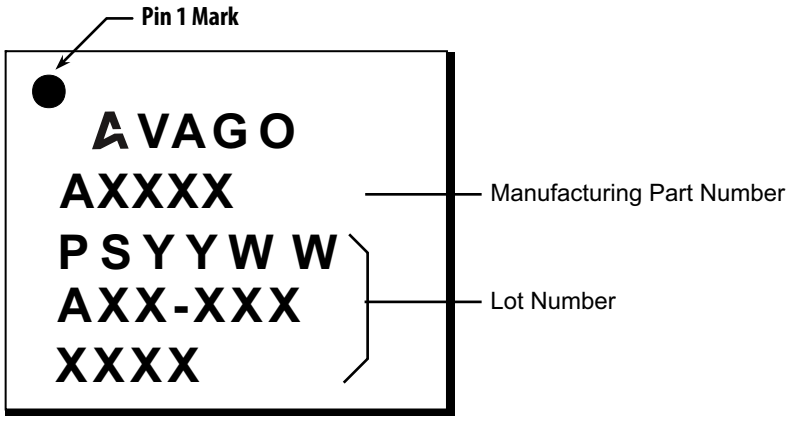

Pin Description

Pin #	Name	Description
1	Gnd	Ground
2	B41_RFout	RF output for B41
3	GND	Ground
4	B40_RFout	RF output for B40
5	GND	Ground
6	B7_RFout	RF output for B7
7	GND	Ground
8	GND	Ground
9	GND	Ground
10	VBATT	Battery supply
11	GND	Ground
12	B7_RFin	RF input B7
13	SCLK	MiPi clock
14	SDATA	MiPi data
15	VIO	MiPi vio
16	B40/B41_RFIN	RF input for B40 and B41
17	GND	Ground
18	NC	NC
19	GND	Ground
20	VCC	PA collector driver and output stage supply
21	GND	Ground

For product information and a complete list of distributors, please go to our web site:
www.avagotech.com

Avago, Avago Technologies, and the A logo are trademarks of Avago Technologies in the United States and other countries. All other brand and product names may be trademarks of their respective companies.

Data subject to change. Copyright © 2015 Avago Technologies. All Rights Reserved.

AV02-4873EN – 2015-03-24

Lead (Pb) Free
RoHS 6 fully compliant
RoHS 6 fully compliant options available; -xxxE denotes a lead-free product

Looking for pricing, stock, or lifecycle information?

Click below to explore more details on WIN SOURCE:

- View ACPM-9374140-TR1 on WIN SOURCE
- Broadcom Limited Information

Optimize Your Supply Chain with WIN SOURCE Solutions

- Global Sourcing Solution
- Obsolete Management
- Cost Control Management
- Shortage Management
- Alternative Solution
- Excess Inventory Management