THE DATASHEET OF

TPS54910PWPRG4

www.win-source.net 0086-755-83957316

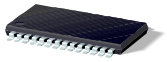

Typical Size
6,4 mm X 9,7 mm

SLVS421C – MARCH 2002 – REVISED FEBRUARY 2005

3-V TO 4-V INPUT, 9-A OUTPUT SYNCHRONOUS BUCK PWM SWITCHER WITH INTEGRATED FETs (SWIFT™)

FEATURES

- **15-mΩ MOSFET Switches for High Efficiency at 9-A Continuous Output**
- **0.9-V to 2.5-V Adjustable Output Voltage**
- **Externally Compensated With 1% Accuracy**
- **Fast Transient Response**
- **Wide PWM Frequency:**
  Fixed 350 kHz, 550 kHz or
  Adjustable 280 kHz to 700 kHz
- **Load Protected by Peak Current Limit and Thermal Shutdown**
- **Integrated Solution Reduces Board Area and Total Cost**

APPLICATIONS

- **Low-Voltage, High-Density Systems With Power Distributed at 3.3 V**
- **Point of Load Regulation for High Performance DSPs, FPGAs, ASICs and Microprocessors**
- **Broadband, Networking and Optical Communications Infrastructure**
- **Portable Computing/Notebook PCs**

DESCRIPTION

As a member of the SWIFT™ family of dc/dc regulators, the TPS54910 low-input voltage high-output current synchronous buck PWM converter integrates all required active components. Included on the substrate with the listed features are a true, high performance, voltage error amplifier that enables maximum performance under transient conditions and flexibility in choosing the output filter L and C components; an under-voltage-lockout circuit to prevent start-up until the input voltage reaches 3 V; an internally and externally set slow-start circuit to limit in-rush currents; and a power good output useful for processor/logic reset, fault signaling, and supply sequencing.

The TPS54910 is available in a thermally enhanced 28-pin TSSOP (PWP) PowerPAD™ package, which eliminates bulky heatsinks. TI provides evaluation modules and the SWIFT™ designer software tool to aid in quickly achieving high-performance power supply designs to meet aggressive equipment development cycles.

SIMPLIFIED SCHEMATIC

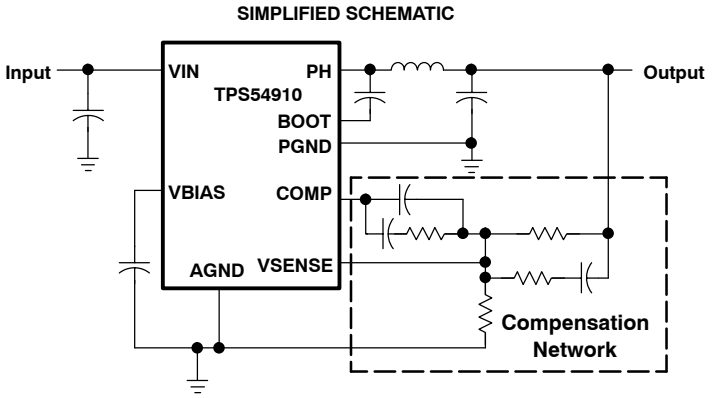

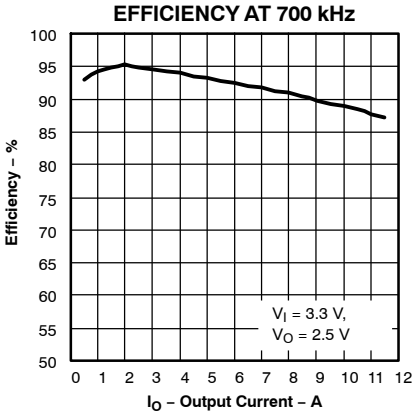

Please be aware that an important notice concerning availability, standard warranty, and use in critical applications of Texas Instruments semiconductor products and disclaimers thereto appears at the end of this data sheet.

PowerPAD and SWIFT are trademarks of Texas Instruments.

PRODUCTION DATA information is current as of publication date. Products conform to specifications per the terms of Texas Instruments standard warranty. Production processing does not necessarily include testing of all parameters.

Copyright © 2002 – 2005, Texas Instruments Incorporated

These devices have limited built-in ESD protection. The leads should be shorted together or the device placed in conductive foam during storage or handling to prevent electrostatic damage to the MOS gates.

ORDERING INFORMATION

T_A	OUTPUT VOLTAGE	PACKAGE	PART NUMBER
–40°C to 85°C	0.9 V to 2.5 V	Plastic HTSSOP (PWP)(1)	TPS54910PWP

(1) The PWP package is also available taped and reeled. Add an R suffix to the device type (i.e., TPS54910PWPR). See the application section of the data sheet for PowerPAD drawing and layout information.
(2) For the most current package and ordering information, see the Package Option Addendum at the end of this document, or see the TI website at www.ti.com.

ABSOLUTE MAXIMUM RATINGS

over operating free-air temperature range unless otherwise noted(1)

		TPS54910	UNIT
Input voltage range, V_I	SS/ENA, SYNC	–0.3 to 7	V
	RT	–0.3 to 6	
	VSENSE	–0.3 to 4	
	VIN	–0.3 to 4.5	
	BOOT	–0.3 to 10	
Output voltage range, V_O	VBIAS, COMP, PWRGD	–0.3 to 7	V
	PH	–0.6 to 6	
Source current, I_O	PH	Internally Limited	
	COMP, VBIAS	6	mA
Sink current, I_S	PH	16	A
	COMP	6	mA
	SS/ENA, PWRGD	10	
Voltage differential	AGND to PGND	±0.3	V
Operating virtual junction temperature range, T_J		–40 to 125	°C
Storage temperature, T_{stg}		–65 to 150	°C
Lead temperature 1,6 mm (1/16 inch) from case for 10 seconds		300	°C

(1) Stresses beyond those listed under “absolute maximum ratings” may cause permanent damage to the device. These are stress ratings only, and functional operation of the device at these or any other conditions beyond those indicated under “recommended operating conditions” is not implied. Exposure to absolute-maximum-rated conditions for extended periods may affect device reliability.

RECOMMENDED OPERATING CONDITIONS

	MIN	NOM	MAX	UNIT
Input voltage, V_I	3		4	V
Operating junction temperature, T_J	–40		125	°C

DISSIPATION RATINGS(1)(2)

PACKAGE	THERMAL IMPEDANCE JUNCTION-TO-AMBIENT	T_A = 25°C POWER RATING	T_A = 70°C POWER RATING	T_A = 85°C POWER RATING
28 Pin PWP with solder	14.4°C/W	6.94 W(3)	3.81 W	2.77 W
28 Pin PWP without solder	27.9°C/W	3.58 W	1.97 W	1.43 W

(1) For more information on the PWP package, refer to TI technical brief, literature number SLMA002.
(2) Test board conditions:
1. 3” x 3”, 4 layers, thickness: 0.062”
2. 1.5 oz. copper traces located on the top of the PCB
3. 1.5 oz. copper ground plane on the bottom of the PCB
4. 0.5 oz. copper ground planes on the 2 internal layers
5. 12 thermal vias (see “Recommended Land Pattern” in applications section of this data sheet)
(3) Maximum power dissipation may be limited by over current protection.

ELECTRICAL CHARACTERISTICS

T_J = –40°C to 125°C, V_I = 3 V to 4 V (unless otherwise noted)

PARAMETER		TEST CONDITIONS	MIN	TYP	MAX	UNIT
SUPPLY VOLTAGE, VIN						
	Input voltage range, VIN		3.0		4.0	V
$I_{(Q)}$	Quiescent current	f_S = 350 kHz, SYNC ≤ 0.8 V, RT open, PH pin open		9.8	17.0	mA
		f_S = 550 kHz, SYNC ≥ 2.5 V, RT open, PH pin open		14.0	23.0	
		Shutdown, SS/ENA = 0 V		1	1.4	
UNDER VOLTAGE LOCK OUT						
	Start threshold voltage, UVLO			2.95	3.0	V
	Stop threshold voltage, UVLO		2.70	2.80		V
	Hysteresis voltage, UVLO		0.14	0.16		V
	Rising and falling edge deglitch, UVLO(1)			2.5		µs
BIAS VOLTAGE						
	Output voltage, VBIAS	$I_{(VBIAS)}$ = 0	2.70	2.80	2.90	V
	Output current, VBIAS (2)				100	µA
CUMULATIVE REFERENCE						
V_{ref}	Accuracy		0.882	0.891	0.900	V
REGULATION						
	Line regulation(1)(3)	I_L = 4.5 A, f_S = 350 kHz, T_J = 85°C			0.07	%/V
		I_L = 4.5 A, f_S = 550 kHz, T_J = 85°C			0.07	
	Load regulation(1)(3)	I_L = 0 A to 9 A, f_S = 350 kHz, T_J = 85°C			0.03	%/A
		I_L = 0 A to 9 A, f_S = 550 kHz, T_J = 85°C			0.03	
OSCILLATOR						
	Internally set—free running frequency	SYNC ≤ 0.8 V, RT open	280	350	420	kHz
		SYNC ≥ 2.5 V, RT open	440	550	660	
	Externally set—free running frequency range	RT = 180 kΩ (1% resistor to AGND)	252	280	308	kHz
		RT = 100 kΩ (1% resistor to AGND)	460	500	540	
		RT = 68 kΩ (1% resistor to AGND)	663	700	762	
	High level threshold, SYNC		2.5			V
	Low level threshold, SYNC				0.8	V
	Pulse duration, external synchronization, SYNC(1)		50			ns
	Frequency range, SYNC(1)		330		700	kHz
	Ramp valley(1)			0.75		V
	Ramp amplitude (peak-to-peak)(1)			1		V
	Minimum controllable on time(1)				200	ns
	Maximum duty cycle(1)		90%			

(1) Specified by design
(2) Static resistive loads only
(3) Specified by the circuit used in Figure 10

ELECTRICAL CHARACTERISTICS (continued)

T_J = –40°C to 125°C, V_I = 3 V to 4 V (unless otherwise noted)

PARAMETER	TEST CONDITIONS	MIN	TYP	MAX	UNIT
ERROR AMPLIFIER					
Error amplifier open loop voltage gain	1 kΩ COMP to AGND(1)	90	110		dB
Error amplifier unity gain bandwidth	Parallel 10 kΩ, 160 pF COMP to AGND(1)	3	5		MHz
Error amplifier common mode input voltage range	Powered by internal LDO(1)	0		VBIAS	V
Input bias current, VSENSE	VSENSE = V_{ref}		60	250	nA
Output voltage slew rate (symmetric), COMP		1.0	1.4		V/µs
PWM COMPARATOR					
PWM comparator propagation delay time, PWM comparator input to PH pin (excluding deadtime)	10-mV overdrive(1)		70	85	ns
SLOW-START/ENABLE					
Enable threshold voltage, SS/ENA		0.82	1.2	1.4	V
Enable hysteresis voltage, SS/ENA(1)			0.03		V
Falling edge deglitch, SS/ENA(1)			2.5		µs
Internal slow-start time		2.6	3.35	4.1	ms
Charge current, SS/ENA	SS/ENA = 0 V	3	5	8	µA
Discharge current, SS/ENA	SS/ENA = 1.3 V, V_I = 1.5 V	1.5	2.3	4.0	mA
POWER GOOD					
Power good threshold voltage	VSENSE falling		90		%V_{ref}
Power good hysteresis voltage(1)			3		%V_{ref}
Power good falling edge deglitch(1)			35		µs
Output saturation voltage, PWRGD	$I_{(sink)}$ = 2.5 mA		0.18	0.3	V
Leakage current, PWRGD	V_I = 5.5 V			1	µA
CURRENT LIMIT					
Current limit	V_I = 3.3 V(1), Output shorted	11	15		A
Current limit leading edge blanking time			100		ns
Current limit total response time			200		ns
THERMAL SHUTDOWN					
Thermal shutdown trip point(1)		135	150	165	°C
Thermal shutdown hysteresis(1)			10		°C
OUTPUT POWER MOSFETS					
$r_{DS(on)}$ Power MOSFET switches	V_I = 3 V(4)		15	30	mΩ
	V_I = 3.6 V(4)		14	28	

(1) Specified by design
(2) Static resistive loads only
(3) Specified by the circuit used in Figure 10
(4) Matched MOSFETs low-side $r_{DS(on)}$ production tested, high-side $r_{DS(on)}$ production tested.

PWP PACKAGE
(TOP VIEW)

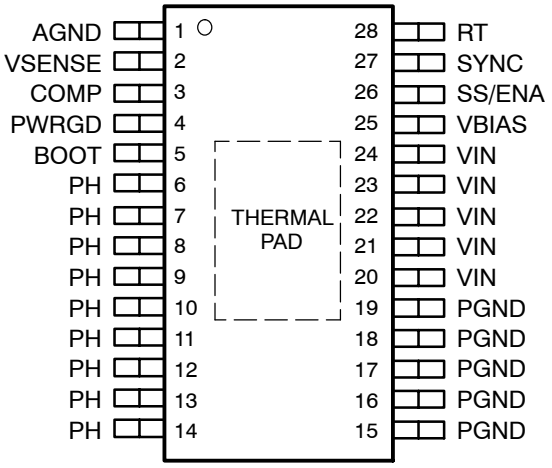

TERMINAL FUNCTIONS

TERMINAL NAME	TERMINAL NO.	DESCRIPTION
AGND	1	Analog ground. Return for compensation network/output divider, slow-start capacitor, VBIAS capacitor, RT resistor and SYNC pin. Connect PowerPAD to AGND.
BOOT	5	Bootstrap output. 0.022-µF to 0.1-µF low-ESR capacitor connected from BOOT to PH generates floating drive for the high-side FET driver.
COMP	3	Error amplifier output. Connect frequency compensation network from COMP to VSENSE
PGND	15–19	Power ground. High current return for the low-side driver and power MOSFET. Connect PGND with large copper areas to the input and output supply returns, and negative terminals of the input and output capacitors. A single point connection to AGND is recommended.
PH	6–14	Phase output. Junction of the internal high-side and low-side power MOSFETs, and output inductor.
PWRGD	4	Power good open drain output. High when VSENSE ≥ 90% V_{ref}, otherwise PWRGD is low. Note that output is low when SS/ENA is low or the internal shutdown signal is active.
RT	28	Frequency setting resistor input. Connect a resistor from RT to AGND to set the switching frequency, f_s.
SS/ENA	26	Slow-start/enable input/output. Dual function pin which provides logic input to enable/disable device operation and capacitor input to externally set the start-up time.
SYNC	27	Synchronization input. Dual function pin which provides logic input to synchronize to an external oscillator or pin select between two internally set switching frequencies. When used to synchronize to an external signal, a resistor must be connected to the RT pin.
VBIAS	25	Internal bias regulator output. Supplies regulated voltage to internal circuitry. Bypass VBIAS pin to AGND pin with a high-quality, low-ESR 0.1-µF to 1.0-µF ceramic capacitor.
VIN	20–24	Input supply for the power MOSFET switches and internal bias regulator. Bypass VIN pins to PGND pins close to device package with a high-quality, low-ESR 10-µF ceramic capacitor.
VSENSE	2	Error amplifier inverting input. Connect to output voltage compensation network/output divider.

INTERNAL BLOCK DIAGRAM

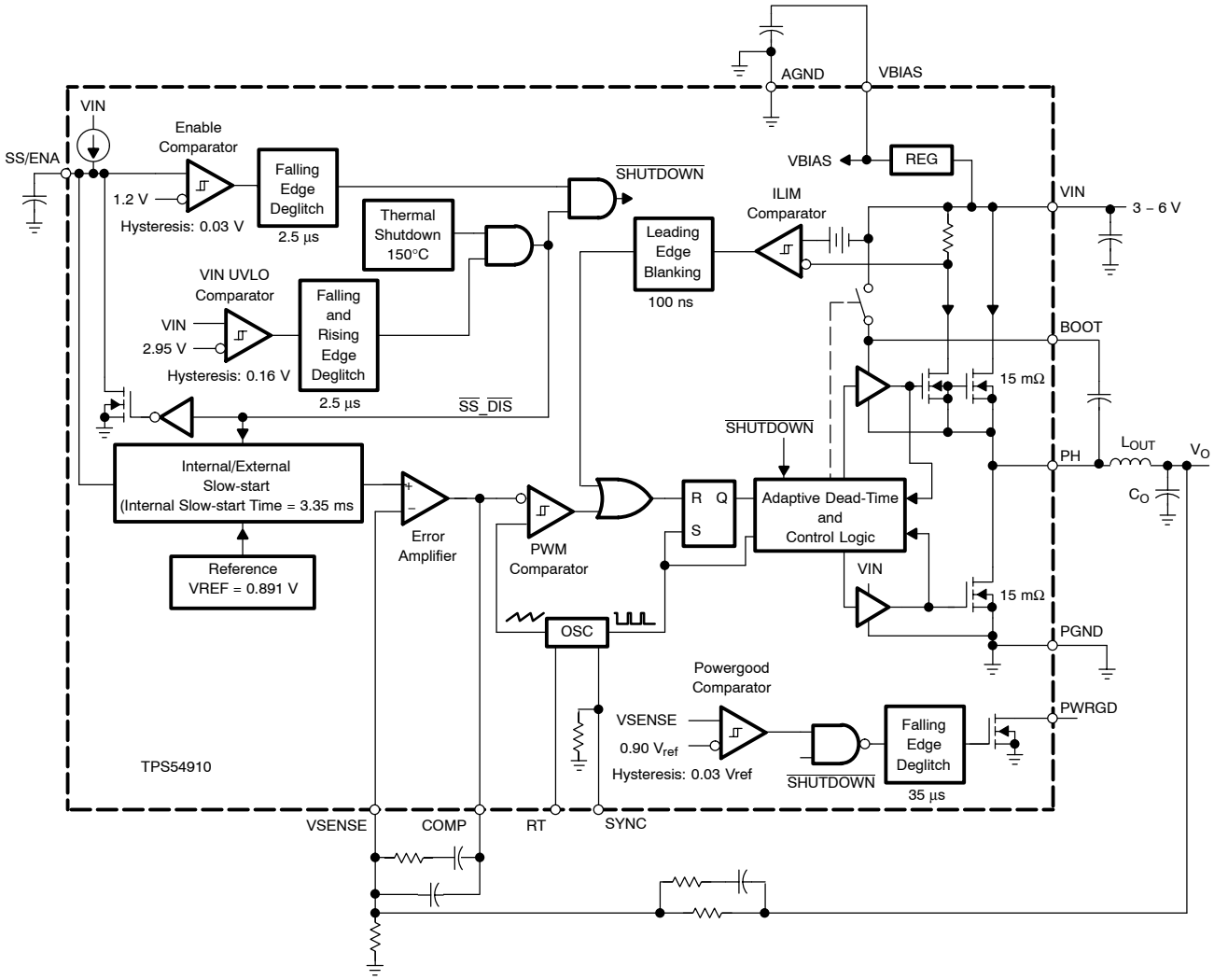

RELATED DC/DC PRODUCTS

- TPS40000—dc/dc controller
- TPS56300—dc/dc controller
- PT6600 series—9 A plugin modules

TYPICAL CHARACTERISTICS

DRAIN-SOURCE ON-STATE RESISTANCE vs JUNCTION TEMPERATURE

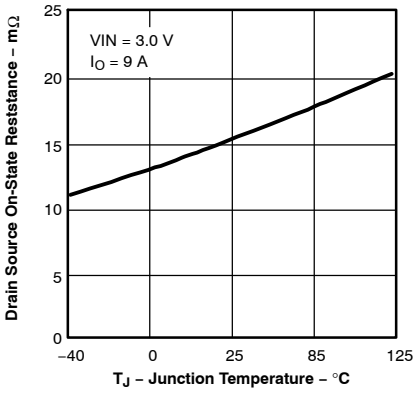

Figure 1

DRAIN-SOURCE ON-STATE RESISTANCE vs JUNCTION TEMPERATURE

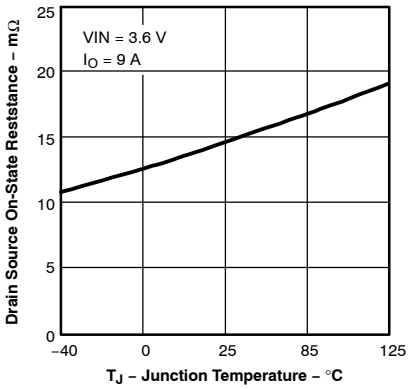

Figure 2

INTERNALLY SET OSCILLATOR FREQUENCY vs JUNCTION TEMPERATURE

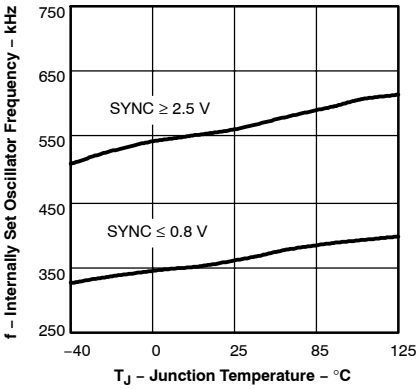

Figure 3

EXTERNALLY SET OSCILLATOR FREQUENCY vs JUNCTION TEMPERATURE

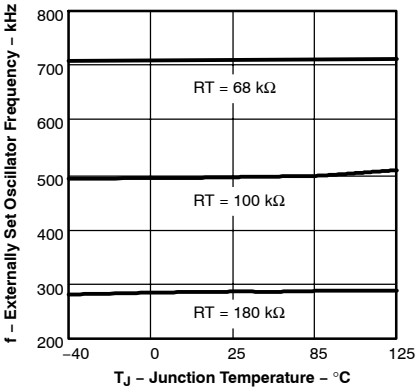

Figure 4

VOLTAGE REFERENCE vs JUNCTION TEMPERATURE

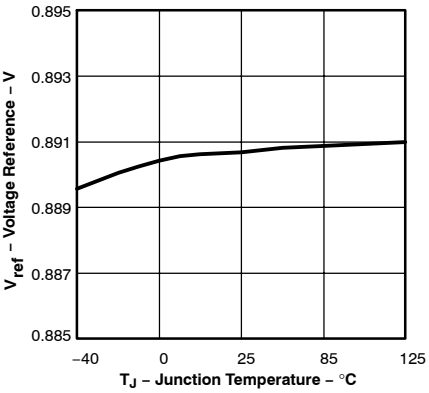

Figure 5

DEVICE POWER LOSSES vs LOAD CURRENT

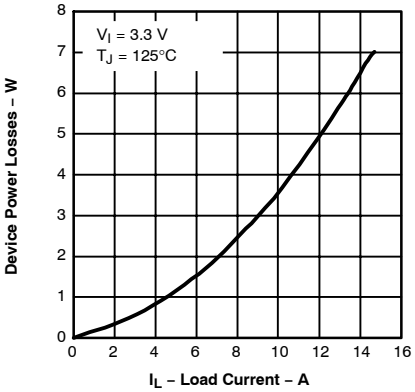

Figure 6

OUTPUT VOLTAGE REGULATION vs INPUT VOLTAGE

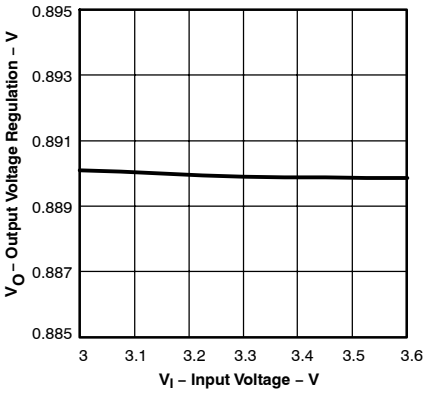

Figure 7

ERROR AMPLIFIER OPEN LOOP RESPONSE

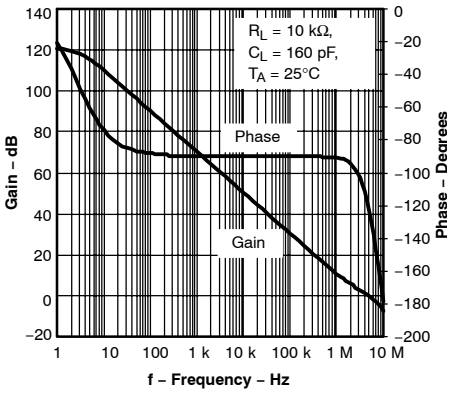

Figure 8

INTERNAL SLOW-START TIME vs JUNCTION TEMPERATURE

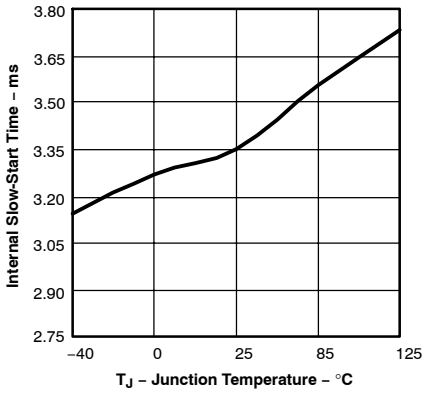

Figure 9

APPLICATION INFORMATION

Figure 10 shows the schematic diagram for a typical TPS54910 application. The TPS54910 (U1) can provide up to 9 A of output current at a nominal output voltage of 1.8 V. For proper thermal performance, the exposed thermal PowerPAD underneath the integrated circuit, TPS54910, package must be soldered to the printed-circuit board.

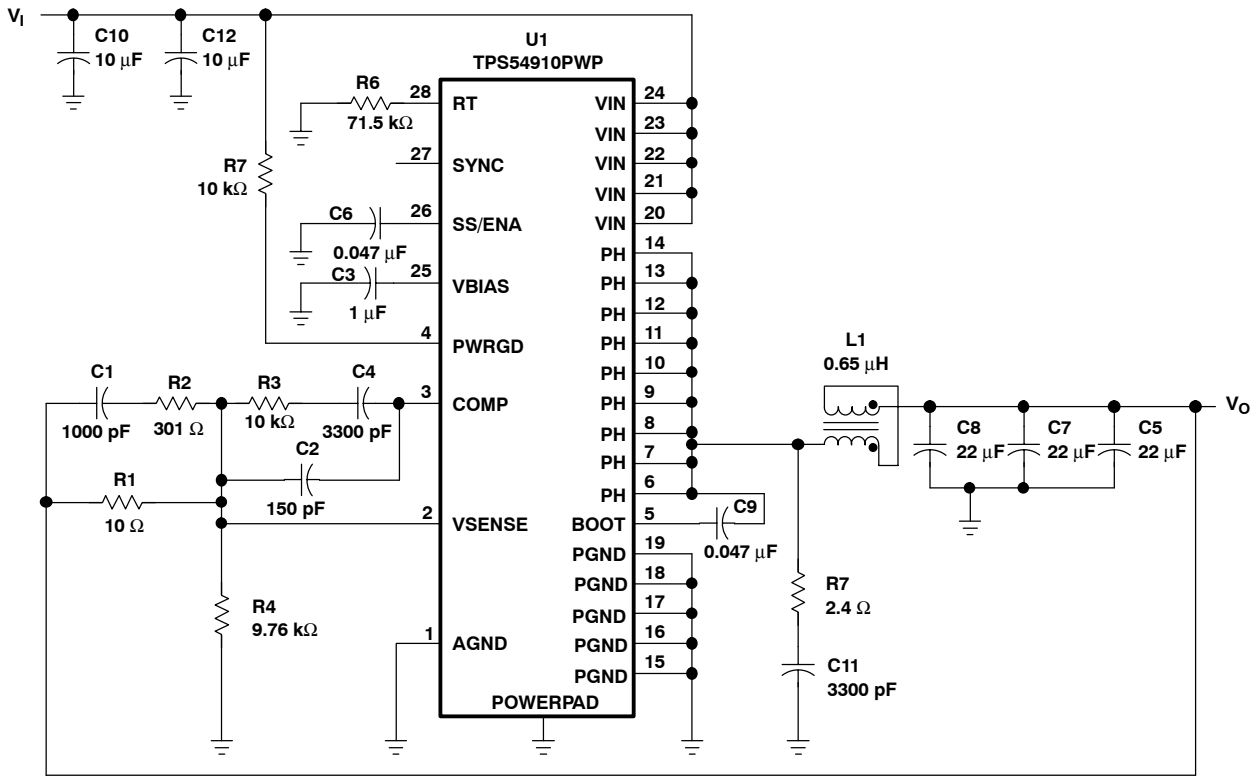

Analog and Power Grounds Are Tied at the Pad Under the Package of IC

Figure 10. Application Circuit

COMPONENT SELECTION

The values for the components used in this design example were selected for best load transient response and small PCB area. Additional design information is available at *www.ti.com*.

INPUT FILTER

The input voltage is a nominal 3.3 VDC. The input filter (C10) is a 10-µF ceramic capacitor (Taiyo Yuden). C12 is also a 10-µF ceramic capacitor (Taiyo Yuden) that provides high-frequency decoupling of the TPS54910 from the input supply. C12 must be located as close as possible to the device. Ripple current is carried in both C10 and C12, and the return path to PGND must avoid the current circulating in the output capacitors C5, C7, and C8.

FEEDBACK CIRCUIT

The values for these components are selected to provide fast transient response times.

The resistor divider network of R1 and R4 sets the output voltage for the circuit at 1.8 V. R1 along with R2, R3, C1, C2, and C4 forms the loop compensation network for the circuit. For this design, a Type-3 topology is used.

OPERATING FREQUENCY

In the application circuit, RT is grounded through a 71.5-kΩ resistor to select the operating frequency of 700 kHz. To set a different frequency, place a 68-kΩ to 180-kΩ resistor between RT (pin 28) and analog ground or leave RT floating to select the default of 350 kHz. The resistance can be approximated using the following equation:

$$R = \frac{500\ \text{kHz}}{\text{Switching Frequency}} \times 100\ [\text{k}\Omega] \quad (1)$$

OUTPUT FILTER

The output filter is composed of a 0.65-µH inductor and 3 x 22-µF capacitor. The inductor is a low dc-resistance (.017 Ω) type, Pulse Engineering PA0277. The capacitors used are 22-µF, 6.3-V ceramic types with X5R dielectric. The feedback loop is compensated so that the unity gain frequency is approximately 75 kHz.

PCB LAYOUT

Figure 11 shows a generalized PCB layout guide for the TPS54910. The VIN pins should be connected together on the printed circuit board (PCB) and bypassed with a low ESR ceramic bypass capacitor. Care should be taken to minimize the loop area formed by the bypass capacitor connections, the VIN pins, and the TPS54910 ground pins. The minimum recommended bypass capacitance is 10 µF ceramic with a X5R or X7R dielectric and the optimum placement is closest to the VIN pins and the PGND pins.

The TPS54910 has two internal grounds (analog and power). The analog ground ties to all of the noise–sensitive signals, while the power ground ties to the noisier power signals. Noise injected between the two grounds can degrade the performance of the TPS54910, particularly at higher output currents. Ground noise on an analog ground plane can also cause problems with some of the control and bias signals. For these reasons, separate analog and power ground traces are recommended. There should be an area of ground on the top layer directly under the IC, with an exposed area for connection to the PowerPAD. Use vias to connect this ground area to any internal ground planes. Use additional vias at the ground side of the input and output filter capacitors as well. The AGND and PGND pins should be tied to the PCB ground by connecting them to the ground area under the device as shown. The only components that should tie directly to the power ground plane are the input capacitors, the output capacitors, the input voltage decoupling capacitor, and the PGND pins of the TPS54910. Use a separate wide trace for the analog ground signal path. This analog ground should be used for the voltage set point divider, timing resistor RT, slow start capacitor, and bias capacitor grounds. Connect this trace directly to AGND (Pin 1).

The PH pins should be tied together and routed to the output inductor. Since the PH connection is the switching node, the inductor should be located very close to the PH pins and the area of the PCB conductor minimized to prevent excessive capacitive coupling.

Connect the boot capacitor between the phase node and the BOOT pin as shown. Keep the boot capacitor close to the IC and minimize the conductor trace lengths.

Connect the output filter capacitor(s) as shown between the VOUT trace and PGND. It is important to keep the loop formed by the PH pins, Lout, Cout and PGND as small as practical.

Place the compensation components from the VOUT trace to the VSENSE and COMP pins. Do not place these components too close to the PH trace. Due to the size of the IC package and the device pinout, the components will have to be routed somewhat close, but maintain as much separation as possible while still keeping the layout compact.

Connect the bias capacitor from the VBIAS pin to analog ground using the isolated analog ground trace. If a slow–start capacitor or RT resistor is used, or if the SYNC pin is used to select 350 kHz operating frequency, connect them to this trace as well.

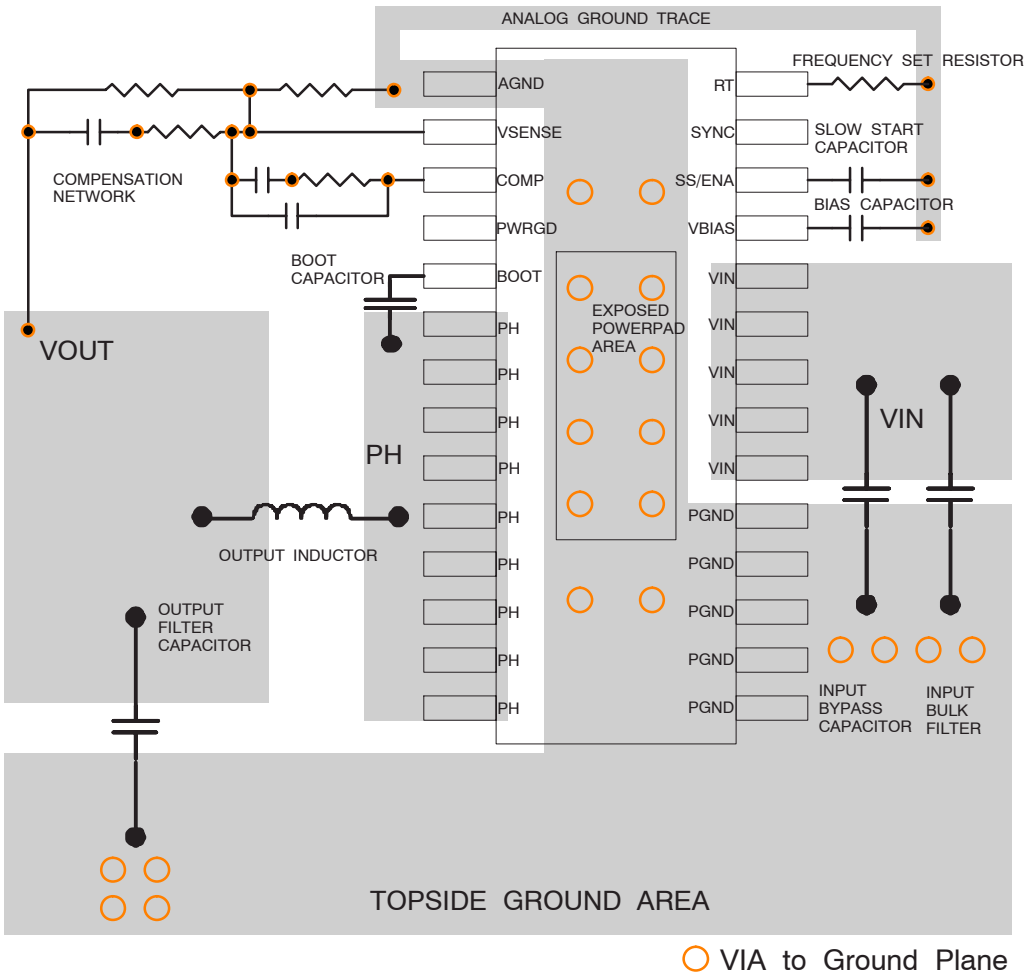

Figure 11. TPS54910 PCB Layout

LAYOUT CONSIDERATIONS FOR THERMAL PERFORMANCE

For operation at full rated load current, the analog ground plane must provide an adequate heat dissipating area. A 3-inch by 3-inch plane of 1 ounce copper is recommended, though not mandatory, depending on ambient temperature and airflow. Most applications have larger areas of internal ground plane available, and the PowerPAD must be connected to the largest area available. Additional areas on the top or bottom layers also help dissipate heat, and any area available must be used when 6 A or greater operation is desired. Connection from the exposed area of the PowerPAD to the analog ground plane layer must be made using 0.013-inch diameter vias to avoid solder wicking through the vias.

Eight vias must be in the PowerPAD area with four additional vias located under the device package. The size of the vias under the package, but not in the exposed thermal pad area, can be increased to 0.018. Additional vias beyond the twelve recommended that enhance thermal performance must be included in areas not under the device package.

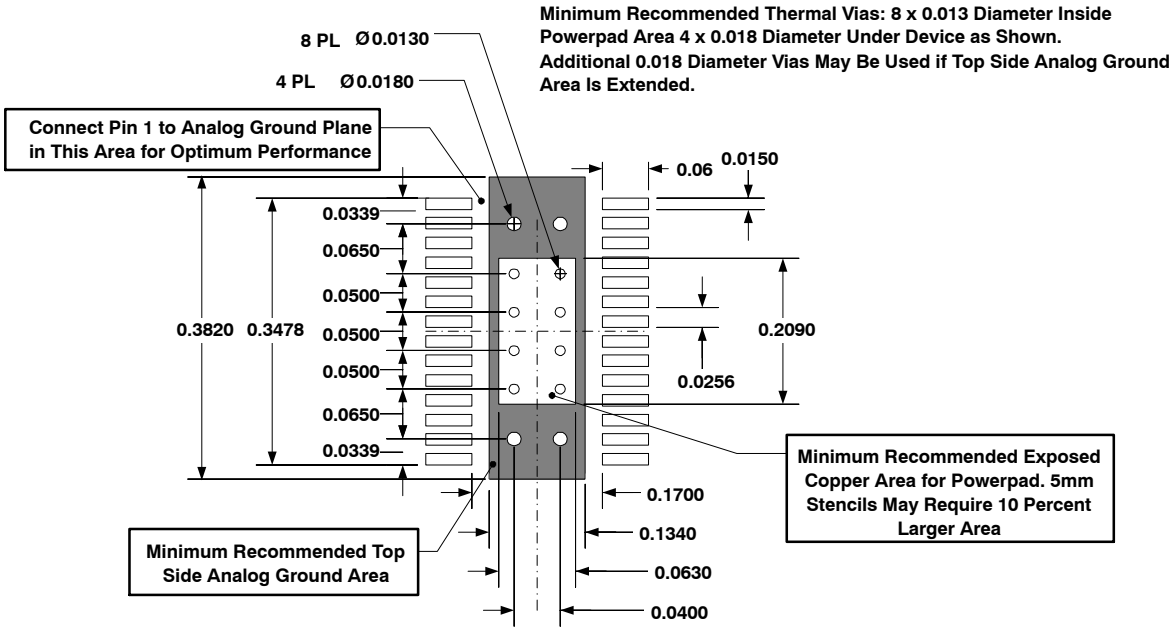

Figure 12. Recommended Land Pattern for 28-Pin PWP PowerPAD

PERFORMANCE GRAPHS

EFFICIENCY vs OUTPUT CURRENT

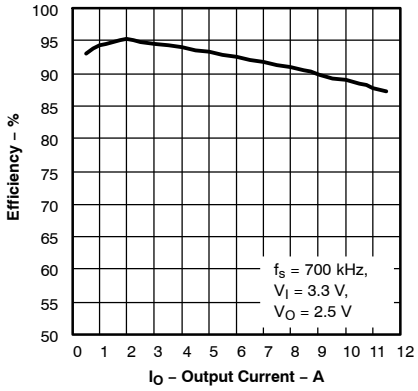

Figure 13

LOAD REGULATION vs OUTPUT CURRENT

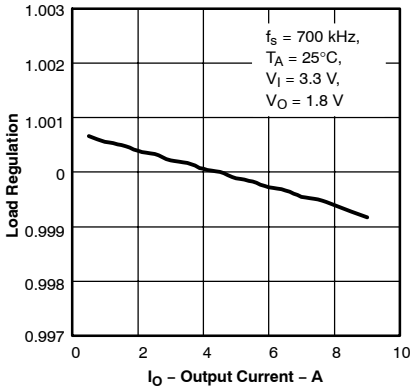

Figure 14

LINE REGULATION vs INPUT VOLTAGE

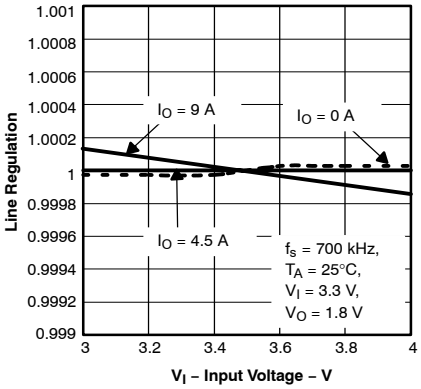

Figure 15

AMBIENT TEMPERATURE vs LOAD CURRENT(1)

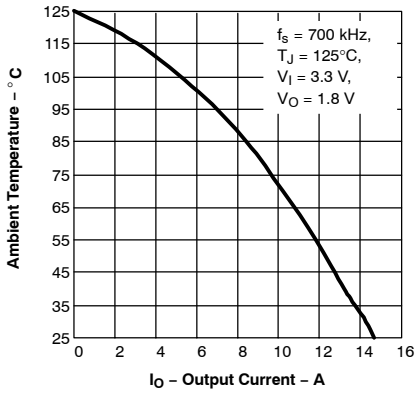

Figure 16

OUTPUT RIPPLE VOLTAGE

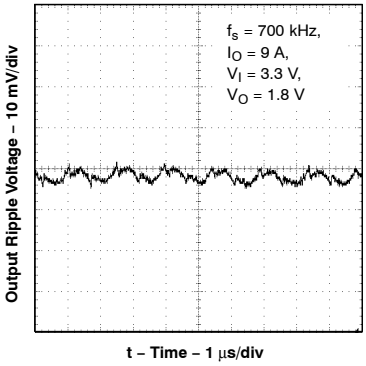

Figure 17

TRANSIENT RESPONSE

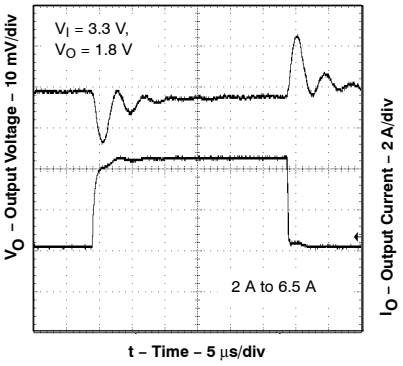

Figure 18

SLOW-START TIMING

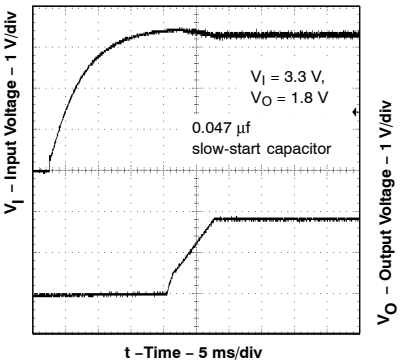

Figure 19

(1) Safe operating area is applicable to the test board conditions in the Dissipation Ratings

DETAILED DESCRIPTION

UNDERVOLTAGE LOCK OUT (UVLO)

The TPS54910 incorporates an under voltage lockout circuit to keep the device disabled when the input voltage (VIN) is insufficient. During power up, internal circuits are held inactive until VIN exceeds the nominal UVLO threshold voltage of 2.95 V. Once the UVLO start threshold is reached, device start-up begins. The device operates until VIN falls below the nominal UVLO stop threshold of 2.8 V. Hysteresis in the UVLO comparator, and a 2.5-µs rising and falling edge deglitch circuit reduce the likelihood of shutting the device down due to noise on VIN.

SLOW-START/ENABLE (SS/ENA)

The slow-start/enable pin provides two functions. First, the pin acts as an enable (shutdown) control by keeping the device turned off until the voltage exceeds the start threshold voltage of approximately 1.2 V. When SS/ENA exceeds the enable threshold, device start-up begins. The reference voltage fed to the error amplifier is linearly ramped up from 0 V to 0.891 V in 3.35 ms. Similarly, the converter output voltage reaches regulation in approximately 3.35 ms. Voltage hysteresis and a 2.5-µs falling edge deglitch circuit reduce the likelihood of triggering the enable due to noise.

The second function of the SS/ENA pin provides an external means of extending the slow-start time with a low-value capacitor connected between SS/ENA and AGND.

Adding a capacitor to the SS/ENA pin has two effects on start-up. First, a delay occurs between release of the SS/ENA pin and start-up of the output. The delay is proportional to the slow-start capacitor value and lasts until the SS/ENA pin reaches the enable threshold. The start-up delay is approximately:

$$t_d = C_{(SS)} \times \frac{1.2\ V}{5\ \mu A} \qquad (2)$$

Second, as the output becomes active, a brief ramp-up at the internal slow-start rate may be observed before the externally set slow-start rate takes control and the output rises at a rate proportional to the slow-start capacitor. The slow-start time set by the capacitor is approximately:

$$t_{(SS)} = C_{(SS)} \times \frac{0.7\ V}{5\ \mu A} \qquad (3)$$

The actual slow-start time is likely to be less than the above approximation due to the brief ramp-up at the internal rate.

VBIAS REGULATOR (VBIAS)

The VBIAS regulator provides internal analog and digital blocks with a stable supply voltage over variations in junction temperature and input voltage. A high quality, low-ESR, ceramic bypass capacitor is required on the VBIAS pin. X7R or X5R grade dielectrics are recommended because their values are more stable over temperature. The bypass capacitor must be placed close to the VBIAS pin and returned to AGND.

External loading on VBIAS is allowed, with the caution that internal circuits require a minimum VBIAS of 2.70 V, and external loads on VBIAS with ac or digital switching noise may degrade performance. The VBIAS pin may be useful as a reference voltage for external circuits.

VOLTAGE REFERENCE

The voltage reference system produces a precise V_{ref} signal by scaling the output of a temperature stable bandgap circuit. During manufacture, the bandgap and scaling circuits are trimmed to produce 0.891 V at the output of the error amplifier, with the amplifier connected as a voltage follower. The trim procedure adds to the high precision regulation of the TPS54910, since it cancels offset errors in the scale and error amplifier circuits.

OSCILLATOR AND PWM RAMP

The oscillator frequency can be set to internally fixed values of 350 kHz or 550 kHz using the SYNC pin as a static digital input. If a different frequency of operation is required for the application, the oscillator frequency can be externally adjusted from 280 to 700 kHz by connecting a resistor between the RT pin to ground and floating the SYNC pin. The switching frequency is approximated by the following equation, where R is the resistance from RT to AGND:

$$\text{Switching Frequency} = \frac{100\ k\Omega}{R} \times 500\ [kHz] \qquad (4)$$

External synchronization of the PWM ramp is possible over the frequency range of 330 kHz to 700 kHz by driving a synchronization signal into SYNC and connecting a resistor from RT to AGND. Choose a RT resistor that sets the free running frequency to 80% of the synchronization signal. The following table summarizes the frequency selection configurations:

SWITCHING FREQUENCY	SYNC PIN	RT PIN
350 kHz, internally set	Float or AGND	Float
550 kHz, internally set	≥ 2.5 V	Float
Externally set 280 kHz to 700 kHz	Float	R = 68 kΩ to 180 kΩ
Externally synchronized frequency	Synchronization signal	R = RT value for 80% of external synchro-nization frequency

ERROR AMPLIFIER

The high performance, wide bandwidth, voltage error amplifier sets the TPS54910 apart from most dc/dc converters. The user is given the flexibility to use a wide range of output L and C filter components to suit the particular application needs. Type-2 or Type-3 compensation can be employed using external compensation components.

PWM CONTROL

Signals from the error amplifier output, oscillator, and current limit circuit are processed by the PWM control logic. Referring to the internal block diagram, the control logic includes the PWM comparator, OR gate, PWM latch, and portions of the adaptive dead-time and control-logic block. During steady-state operation below the current limit threshold, the PWM comparator output and oscillator pulse train alternately reset and set the PWM latch. Once the PWM latch is set, the low-side FET remains on for a minimum duration set by the oscillator pulse width. During this period, the PWM ramp discharges rapidly to its valley voltage. When the ramp begins to charge back up, the low-side FET turns off and high-side FET turns on. As the PWM ramp voltage exceeds the error amplifier output voltage, the PWM comparator resets the latch, thus turning off the high-side FET and turning on the low-side FET. The low-side FET remains on until the next oscillator pulse discharges the PWM ramp.

During transient conditions, the error amplifier output could be below the PWM ramp valley voltage or above the PWM peak voltage. If the error amplifier is high, the PWM latch is never reset, and the high-side FET remains on until the oscillator pulse signals the control logic to turn the high-side FET off and the low-side FET on. The device operates at its maximum duty cycle until the output voltage rises to the regulation set-point, setting VSENSE to approximately the same voltage as VREF. If the error amplifier output is low, the PWM latch is continually reset and the high-side FET does not turn on. The low-side FET remains on until the VSENSE voltage decreases to a range that allows the PWM comparator to change states. The TPS54910 is capable of sinking current continuously until the output reaches the regulation set-point.

If the current limit comparator trips for longer than 100 ns, the PWM latch resets before the PWM ramp exceeds the error amplifier output. The high-side FET turns off and low-side FET turns on to decrease the energy in the output inductor and consequently the output current. This process is repeated each cycle in which the current limit comparator is tripped.

DEAD-TIME CONTROL AND MOSFET DRIVERS

Adaptive dead-time control prevents shoot-through current from flowing in both N-channel power MOSFETs during the switching transitions by actively controlling the turnon times of the MOSFET drivers. The high-side driver does not turn on until the voltage at the gate of the low-side FET is below 2 V. While the low-side driver does not turn on until the voltage at the gate of the high-side MOSFET is below 2 V.

The high-side and low-side drivers are designed with 300-mA source and sink capability to quickly drive the power MOSFETs gates. The low-side driver is supplied from VIN, while the high-side drive is supplied from the BOOT pin. A bootstrap circuit uses an external BOOT capacitor and an internal 2.5-Ω bootstrap switch connected between the VIN and BOOT pins. The integrated bootstrap switch improves drive efficiency and reduces external component count.

OVERCURRENT PROTECTION

The cycle-by-cycle current limiting is achieved by sensing the current flowing through the high-side MOSFET and comparing this signal to a preset overcurrent threshold. The high side MOSFET is turned off within 200 ns of reaching the current limit threshold. A 100-ns leading edge blanking circuit prevents current limit false tripping. Current limit detection occurs only when current flows from VIN to PH when sourcing current to the output filter. Load protection during current sink operation is provided by thermal shutdown.

THERMAL SHUTDOWN

The device uses the thermal shutdown to turn off the power MOSFETs and disable the controller if the junction temperature exceeds 150°C. The device is released from shutdown automatically when the junction temperature decreases to 10°C below the thermal shutdown trip point, and starts up under control of the slow-start circuit.

Thermal shutdown provides protection when an overload condition is sustained for several milliseconds. With a persistent fault condition, the device cycles continuously; starting up by control of the soft-start circuit, heating up due to the fault condition, and then shutting down upon reaching the thermal shutdown trip point. This sequence repeats until the fault condition is removed.

POWER-GOOD (PWRGD)

The power good circuit monitors for under voltage conditions on VSENSE. If the voltage on VSENSE is 10% below the reference voltage, the open-drain PWRGD output is pulled low. PWRGD is also pulled low if VIN is less than the UVLO threshold or SS/ENA is low. When VIN ≥ UVLO threshold, SS/ENA ≥ enable threshold, and VSENSE > 90% of V_{ref}, the open drain output of the PWRGD pin is high. A hysteresis voltage equal to 3% of V_{ref} and a 35 µs falling edge deglitch circuit prevent tripping of the power good comparator due to high frequency noise.

PACKAGING INFORMATION

Orderable Device	Status (1)	Package Type	Package Drawing	Pins	Package Qty	Eco Plan (2)	Lead/Ball Finish	MSL Peak Temp (3)	Op Temp (°C)	Top-Side Markings (4)	Samples
TPS54910PWP	ACTIVE	HTSSOP	PWP	28	50	Green (RoHS & no Sb/Br)	CU NIPDAU	Level-2-260C-1 YEAR	-40 to 85	TPS54910	Samples
TPS54910PWPG4	ACTIVE	HTSSOP	PWP	28	50	Green (RoHS & no Sb/Br)	CU NIPDAU	Level-2-260C-1 YEAR	-40 to 85	TPS54910	Samples
TPS54910PWPR	ACTIVE	HTSSOP	PWP	28	2000	Green (RoHS & no Sb/Br)	CU NIPDAU	Level-2-260C-1 YEAR	-40 to 85	TPS54910	Samples
TPS54910PWPRG4	ACTIVE	HTSSOP	PWP	28	2000	Green (RoHS & no Sb/Br)	CU NIPDAU	Level-2-260C-1 YEAR	-40 to 85	TPS54910	Samples

(1) The marketing status values are defined as follows:
ACTIVE: Product device recommended for new designs.
LIFEBUY: TI has announced that the device will be discontinued, and a lifetime-buy period is in effect.
NRND: Not recommended for new designs. Device is in production to support existing customers, but TI does not recommend using this part in a new design.
PREVIEW: Device has been announced but is not in production. Samples may or may not be available.
OBSOLETE: TI has discontinued the production of the device.

(2) Eco Plan - The planned eco-friendly classification: Pb-Free (RoHS), Pb-Free (RoHS Exempt), or Green (RoHS & no Sb/Br) - please check http://www.ti.com/productcontent for the latest availability information and additional product content details.
TBD: The Pb-Free/Green conversion plan has not been defined.
Pb-Free (RoHS): TI's terms "Lead-Free" or "Pb-Free" mean semiconductor products that are compatible with the current RoHS requirements for all 6 substances, including the requirement that lead not exceed 0.1% by weight in homogeneous materials. Where designed to be soldered at high temperatures, TI Pb-Free products are suitable for use in specified lead-free processes.
Pb-Free (RoHS Exempt): This component has a RoHS exemption for either 1) lead-based flip-chip solder bumps used between the die and package, or 2) lead-based die adhesive used between the die and leadframe. The component is otherwise considered Pb-Free (RoHS compatible) as defined above.
Green (RoHS & no Sb/Br): TI defines "Green" to mean Pb-Free (RoHS compatible), and free of Bromine (Br) and Antimony (Sb) based flame retardants (Br or Sb do not exceed 0.1% by weight in homogeneous material)

(3) MSL, Peak Temp. -- The Moisture Sensitivity Level rating according to the JEDEC industry standard classifications, and peak solder temperature.

(4) Multiple Top-Side Markings will be inside parentheses. Only one Top-Side Marking contained in parentheses and separated by a "~" will appear on a device. If a line is indented then it is a continuation of the previous line and the two combined represent the entire Top-Side Marking for that device.

Important Information and Disclaimer: The information provided on this page represents TI's knowledge and belief as of the date that it is provided. TI bases its knowledge and belief on information provided by third parties, and makes no representation or warranty as to the accuracy of such information. Efforts are underway to better integrate information from third parties. TI has taken and continues to take reasonable steps to provide representative and accurate information but may not have conducted destructive testing or chemical analysis on incoming materials and chemicals. TI and TI suppliers consider certain information to be proprietary, and thus CAS numbers and other limited information may not be available for release.

In no event shall TI's liability arising out of such information exceed the total purchase price of the TI part(s) at issue in this document sold by TI to Customer on an annual basis.

TAPE AND REEL INFORMATION

REEL DIMENSIONS

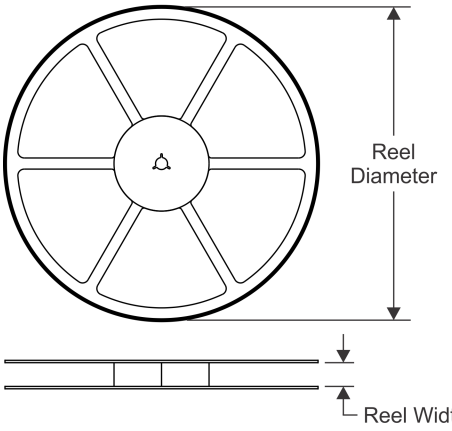

TAPE DIMENSIONS

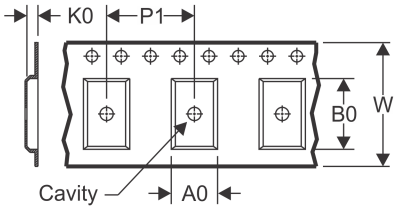

A0	Dimension designed to accommodate the component width
B0	Dimension designed to accommodate the component length
K0	Dimension designed to accommodate the component thickness
W	Overall width of the carrier tape
P1	Pitch between successive cavity centers

QUADRANT ASSIGNMENTS FOR PIN 1 ORIENTATION IN TAPE

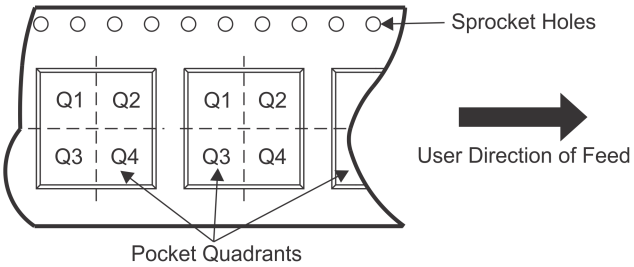

*All dimensions are nominal

Device	Package Type	Package Drawing	Pins	SPQ	Reel Diameter (mm)	Reel Width W1 (mm)	A0 (mm)	B0 (mm)	K0 (mm)	P1 (mm)	W (mm)	Pin1 Quadrant
TPS54910PWPR	HTSSOP	PWP	28	2000	330.0	16.4	6.9	10.2	1.8	12.0	16.0	Q1

TAPE AND REEL BOX DIMENSIONS

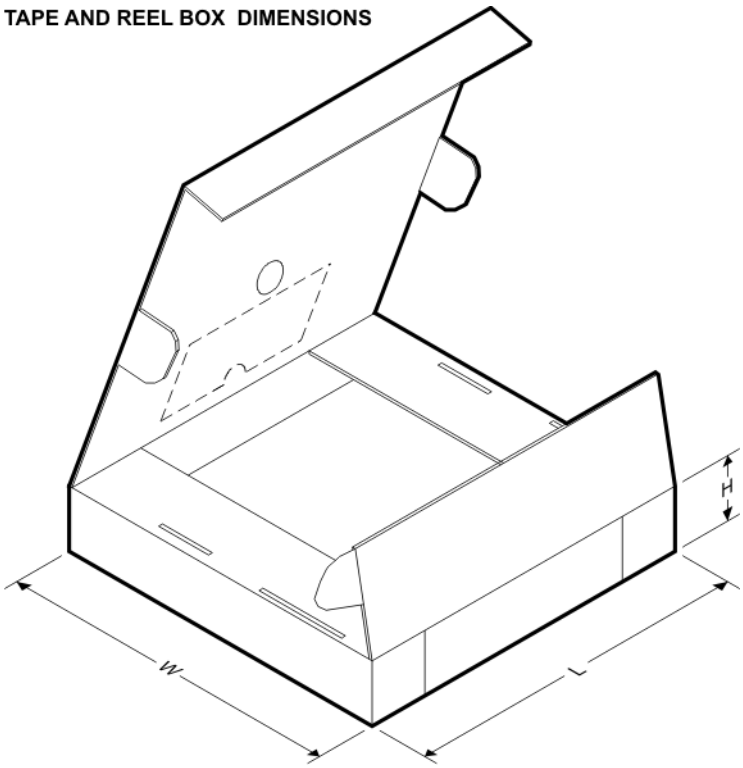

*All dimensions are nominal

Device	Package Type	Package Drawing	Pins	SPQ	Length (mm)	Width (mm)	Height (mm)
TPS54910PWPR	HTSSOP	PWP	28	2000	367.0	367.0	38.0

GENERIC PACKAGE VIEW

PWP 28

PowerPAD™ TSSOP - 1.2 mm max height

4.4 x 9.7, 0.65 mm pitch

SMALL OUTLINE PACKAGE

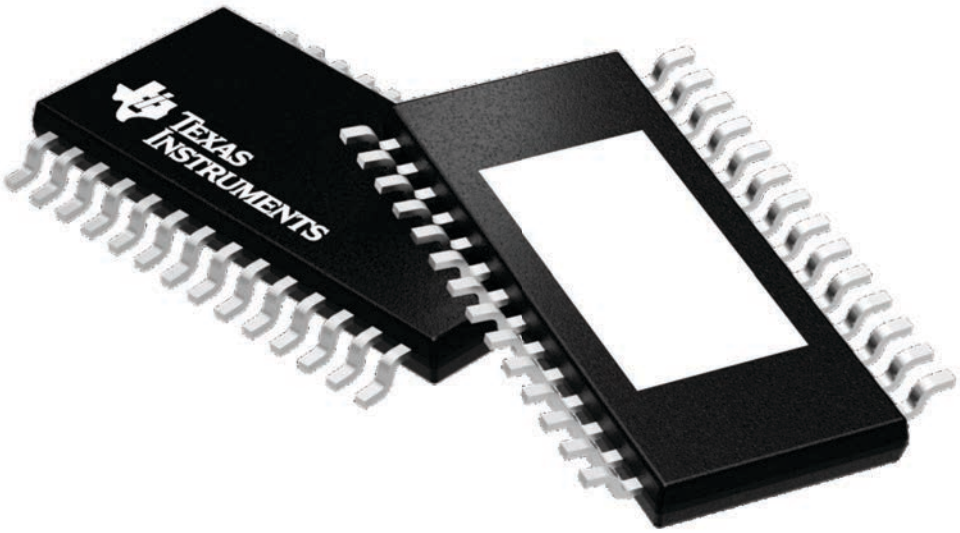

Images above are just a representation of the package family, actual package may vary.
Refer to the product data sheet for package details.

4224765/A

PWP (R-PDSO-G28) PowerPAD™ PLASTIC SMALL OUTLINE

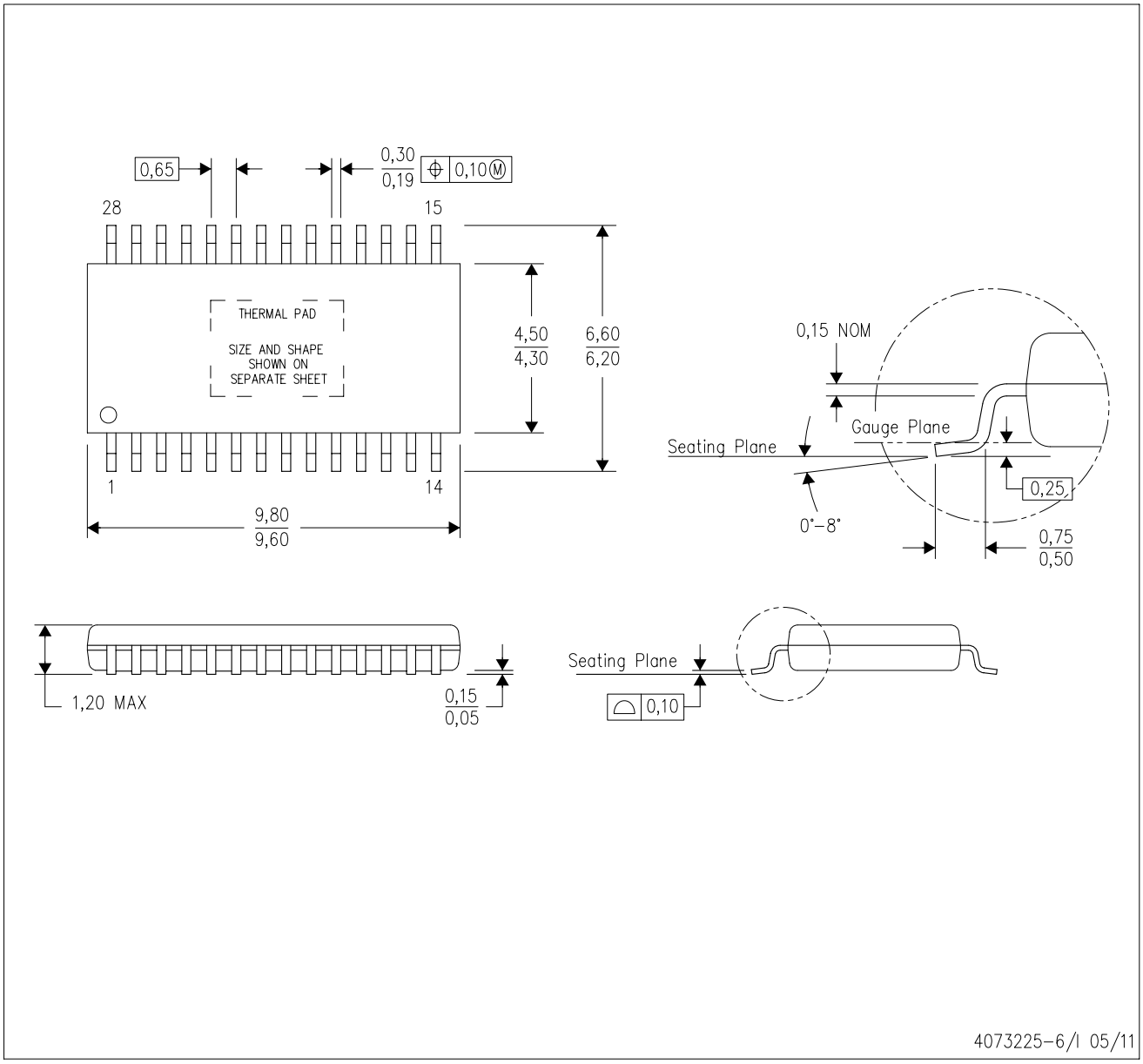

NOTES:
A. All linear dimensions are in millimeters.
B. This drawing is subject to change without notice.
C. Body dimensions do not include mold flash or protrusions. Mold flash and protrusion shall not exceed 0.15 per side.
D. This package is designed to be soldered to a thermal pad on the board. Refer to Technical Brief, PowerPad Thermally Enhanced Package, Texas Instruments Literature No. SLMA002 for information regarding recommended board layout. This document is available at www.ti.com <http://www.ti.com>.
E. See the additional figure in the Product Data Sheet for details regarding the exposed thermal pad features and dimensions.
E. Falls within JEDEC MO-153

PowerPAD is a trademark of Texas Instruments.

PWP (R-PDSO-G28) PowerPAD™ SMALL PLASTIC OUTLINE

THERMAL INFORMATION

This PowerPAD™ package incorporates an exposed thermal pad that is designed to be attached to a printed circuit board (PCB). The thermal pad must be soldered directly to the PCB. After soldering, the PCB can be used as a heatsink. In addition, through the use of thermal vias, the thermal pad can be attached directly to the appropriate copper plane shown in the electrical schematic for the device, or alternatively, can be attached to a special heatsink structure designed into the PCB. This design optimizes the heat transfer from the integrated circuit (IC).

For additional information on the PowerPAD package and how to take advantage of its heat dissipating abilities, refer to Technical Brief, PowerPAD Thermally Enhanced Package, Texas Instruments Literature No. SLMA002 and Application Brief, PowerPAD Made Easy, Texas Instruments Literature No. SLMA004. Both documents are available at www.ti.com.

The exposed thermal pad dimensions for this package are shown in the following illustration.

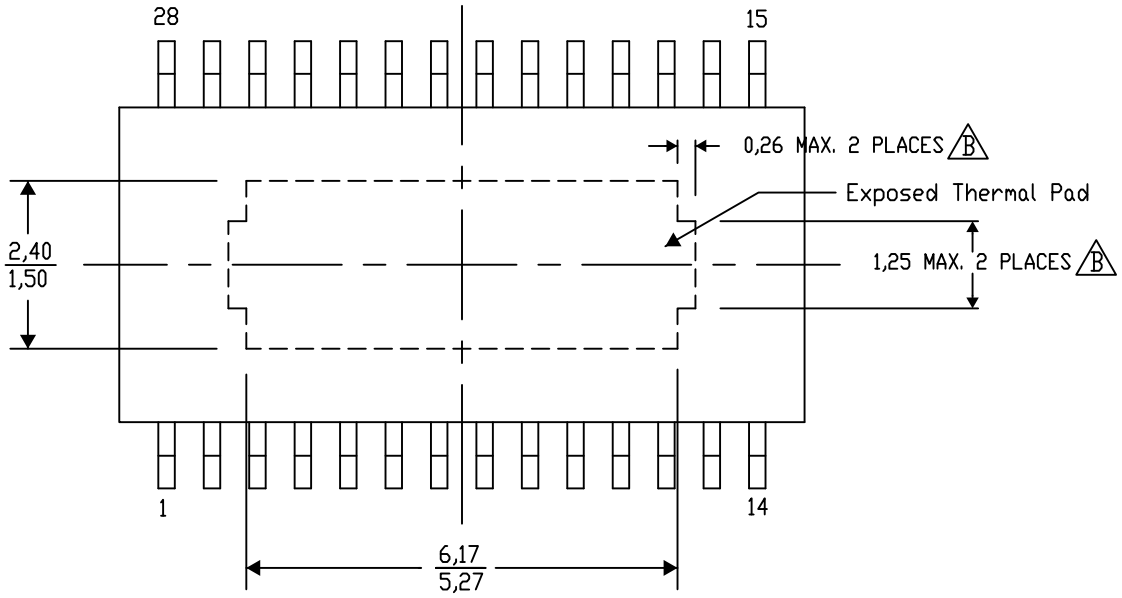

Top View

Exposed Thermal Pad Dimensions

4206332-33/AO 01/16

NOTE: A. All linear dimensions are in millimeters

B. Exposed tie strap features may not be present.

PowerPAD is a trademark of Texas Instruments

PWP (R-PDSO-G28) PowerPAD™ PLASTIC SMALL OUTLINE

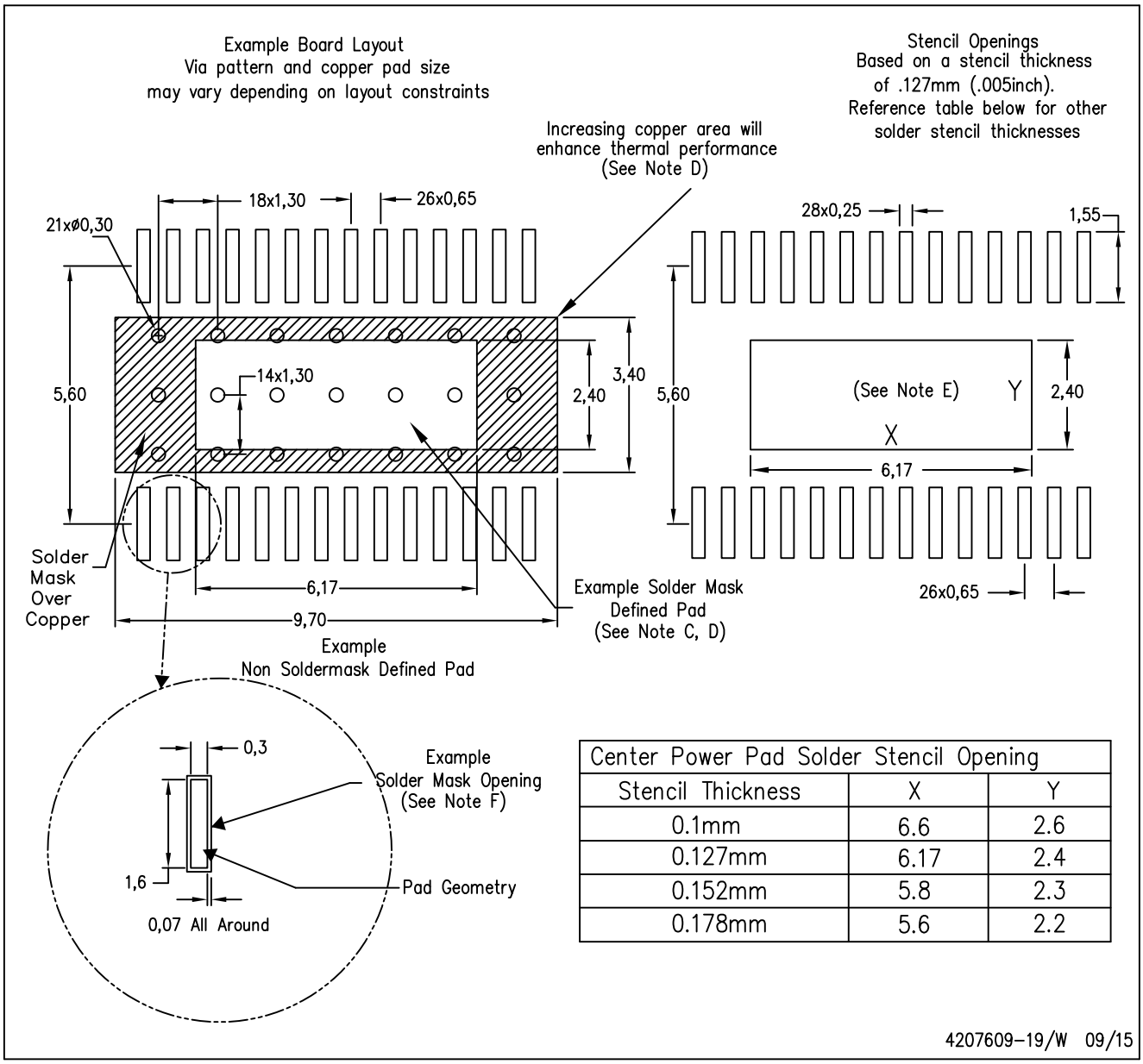

Center Power Pad Solder Stencil Opening		
Stencil Thickness	X	Y
0.1mm	6.6	2.6
0.127mm	6.17	2.4
0.152mm	5.8	2.3
0.178mm	5.6	2.2

4207609-19/W 09/15

NOTES:
- A. All linear dimensions are in millimeters.
- B. This drawing is subject to change without notice.
- C. Customers should place a note on the circuit board fabrication drawing not to alter the center solder mask defined pad.
- D. This package is designed to be soldered to a thermal pad on the board. Refer to Technical Brief, PowerPad Thermally Enhanced Package, Texas Instruments Literature No. SLMA002, SLMA004, and also the Product Data Sheets.
- E. For specific thermal information, via requirements, and recommended board layout. These documents are available at www.ti.com <http://www.ti.com>. Publication IPC-7351 is recommended for alternate designs. Laser cutting apertures with trapezoidal walls and also rounding corners will offer better paste release. Customers should contact their board assembly site for stencil design recommendations. Example stencil design based on a 50% volumetric metal load solder paste. Refer to IPC-7525 for other stencil
- F. Customers should contact their board fabrication site for solder mask tolerances between and around signal pads.

IMPORTANT NOTICE AND DISCLAIMER

TI PROVIDES TECHNICAL AND RELIABILITY DATA (INCLUDING DATASHEETS), DESIGN RESOURCES (INCLUDING REFERENCE DESIGNS), APPLICATION OR OTHER DESIGN ADVICE, WEB TOOLS, SAFETY INFORMATION, AND OTHER RESOURCES “AS IS” AND WITH ALL FAULTS, AND DISCLAIMS ALL WARRANTIES, EXPRESS AND IMPLIED, INCLUDING WITHOUT LIMITATION ANY IMPLIED WARRANTIES OF MERCHANTABILITY, FITNESS FOR A PARTICULAR PURPOSE OR NON-INFRINGEMENT OF THIRD PARTY INTELLECTUAL PROPERTY RIGHTS.

These resources are intended for skilled developers designing with TI products. You are solely responsible for (1) selecting the appropriate TI products for your application, (2) designing, validating and testing your application, and (3) ensuring your application meets applicable standards, and any other safety, security, or other requirements. These resources are subject to change without notice. TI grants you permission to use these resources only for development of an application that uses the TI products described in the resource. Other reproduction and display of these resources is prohibited. No license is granted to any other TI intellectual property right or to any third party intellectual property right. TI disclaims responsibility for, and you will fully indemnify TI and its representatives against, any claims, damages, costs, losses, and liabilities arising out of your use of these resources.

TI’s products are provided subject to TI’s Terms of Sale (www.ti.com/legal/termsofsale.html) or other applicable terms available either on ti.com or provided in conjunction with such TI products. TI’s provision of these resources does not expand or otherwise alter TI’s applicable warranties or warranty disclaimers for TI products.

Mailing Address: Texas Instruments, Post Office Box 655303, Dallas, Texas 75265
Copyright © 2019, Texas Instruments Incorporated

Looking for pricing, stock, or lifecycle information?

Click below to explore more details on WIN SOURCE:

- View TPS54910PWPRG4 on WIN SOURCE
- Texas Instruments Information

Optimize Your Supply Chain with WIN SOURCE Solutions

- Global Sourcing Solution
- Obsolete Management
- Cost Control Management
- Shortage Management
- Alternative Solution
- Excess Inventory Management