THE DATASHEET OF

AH2984-PG-B

www.win-source.net 0086-755-83957316

TWO PHASE HALL-EFFECT SMART FAN MOTOR CONTROLLER

Description

The AH2984 is a single-chip solution for driving two-coil brushless direct current (BLDC) fans and motors. The device includes a Hall-effect sensor, dynamic offset correction and two complementary open-drain output drivers with internal Zener diode protection. It is optimized for low start-up voltage.

To help protect the motor coils, the AH2984 provides Rotor Lock Protection which shuts down output drives if rotor lock is detected. The device automatically re-starts when the rotor lock is removed. Over temperature shutdown provides thermal protection for the device.

The AH2984 is available in SIP4 and SOT89-5 packages.

Features

- Single-chip solution
- Operating Voltage: 2.5V to 15V
- Built-in Hall sensor and input amplifier
- Rotor Lock Protection (Lock detection, output shutdown and automatic re-start)
- Built-in reverse voltage protection diode
- Built-in Zener protection for output drivers
- Average output current up to 500mA
- Packages: SIP-4 and SOT89-5
- "Green" Molding Compound
- **Totally Lead-Free & Fully RoHS Compliant (Notes 1 & 2)**
- **Halogen and Antimony Free. "Green" Device (Note 3)**

Pin Assignments

(Top View)

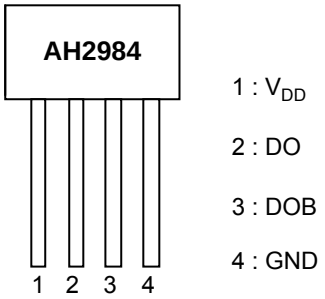

SIP-4

(Top View)

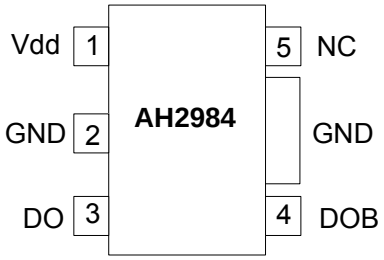

SOT89-5

Applications

- Two-coil BLDC Cooling Fans
- Low Voltage/ Low Power BLDC Motors

Notes:
1. No purposely added lead. Fully EU Directive 2002/95/EC (RoHS) & 2011/65/EU (RoHS 2) compliant.
2. See http://www.diodes.com/quality/lead_free.html for more information about Diodes Incorporated's definitions of Halogen- and Antimony-free, "Green" and Lead-free.
3. Halogen- and Antimony-free "Green" products are defined as those which contain <900ppm bromine, <900ppm chlorine (<1500ppm total Br + Cl) and <1000ppm antimony compounds.

© Diodes Incorporated

Typical Applications Circuit (Note 4)

(1) For SIP-4

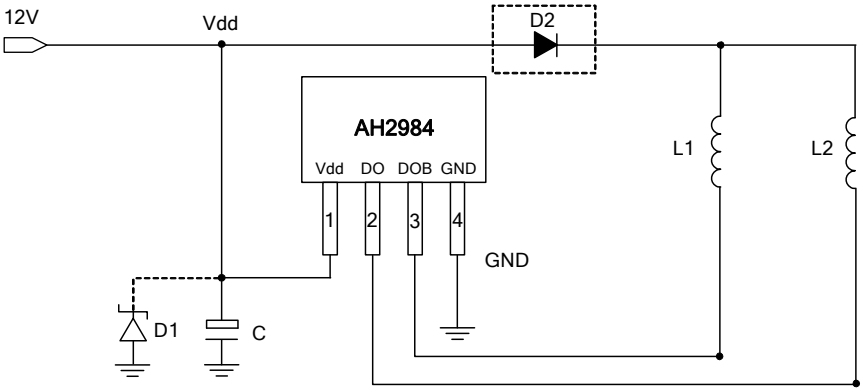

12V Brushless DC Fan

(2) For SOT89-5

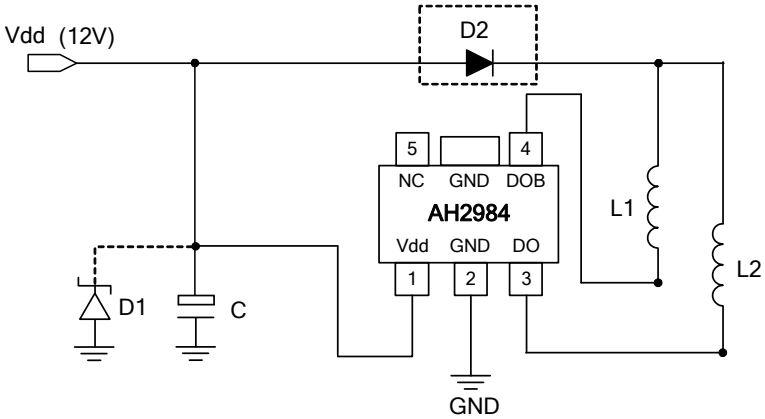

12V Brushless DC Fan

Note: 4. D1 (Zener Diode) and Capacitor C are for power stabilization. Recommended value of C is 1μF/ 50V (E-Cap). Diode D2 is optional and helps to protect the device and fan coils from reverse power conditions. The AH2984 also includes an internal reverse blocking diode at V_{DD} pin.

Pin Descriptions

Pin Name	SIP-4	SOT89-5	Description
V_{DD}	1	1	Input Power
DO	2	3	Output Pin
DOB	3	4	Output Pin
GND	4	2	Ground
NC	—	5	No Connection

© Diodes Incorporated

Functional Block Diagram

(1) For SIP-4

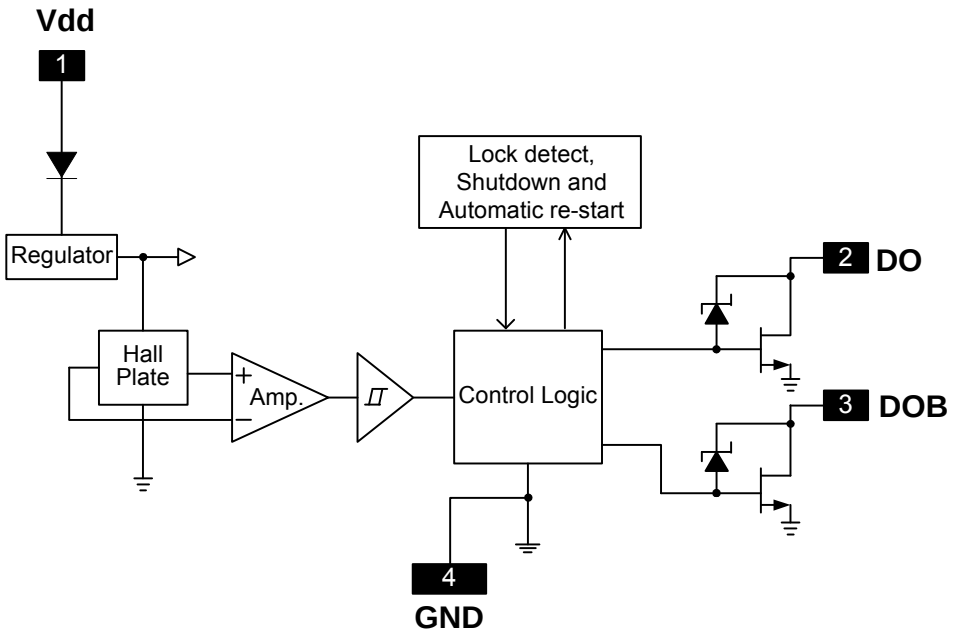

(2) For SOT89-5

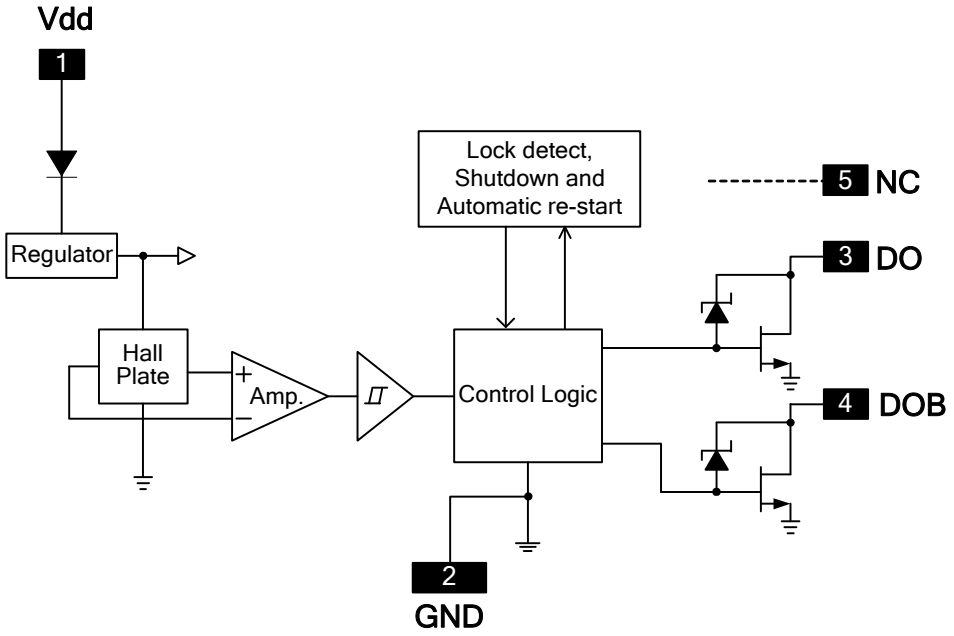

© Diodes Incorporated

Absolute Maximum Ratings (@T_A = +25°C, unless otherwise specified.)

Symbol	Conditions		Rating	Unit
V_{DD}	Supply Voltage		18	V
V_{RDD}	Reverse V_{DD} Polarity Voltage		-15	V
$I_{O(AVE)}$	Output Current (Note 5)		500	mA
$I_{O(peak\ as\ hold)}$			800	
P_D	Power Dissipation	SIP-4	550	mW
		SOT89-5	800	mW
T_{ST}	Storage Temperature		-55 to +150	°C
T_J	Maximum Junction Temperature		+150	°C
θ_{JA}	Thermal Resistance (Note 6)	SIP-4	227	°C/W
		SOT89-5	168	°C/W
θ_{JC}	Thermal Resistance (Note 6)	SIP-4	49	°C/W
		SOT89-5	36	°C/W

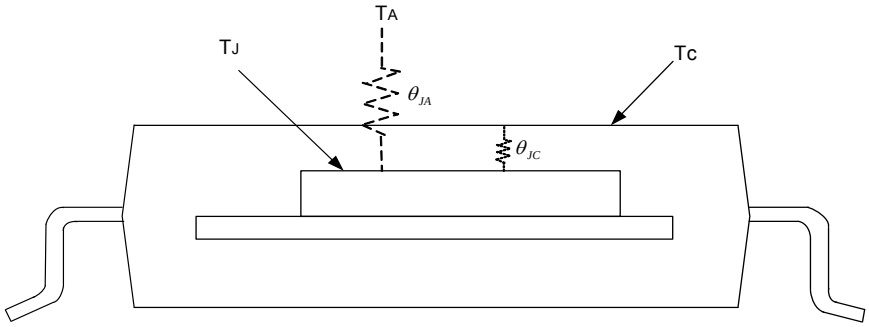

Recommended Operating Conditions (@T_A = +25°C, unless otherwise specified.)

Symbol	Parameter	Conditions	Min	Max	Unit
V_{DD}	Supply Voltage	Operating	2.5	15	V
T_A	Operating Ambient Temperature (Note 5)	Operating	-40	+105	°C

Electrical Characteristics (@T_A = +25°C; V_{DD} = 12V; unless otherwise specified, Note 4)

Symbol	Characteristics	Conditions	Min	Typ.	Max	Unit
I_{DD}	Supply Current	Operating, V_{DD} = 12V	2.0	3.5	5.0	mA
T_{on}	Locked Protection On Time	—	—	0.25	—	s
T_{off}	Locked Protection Off Time	—	—	3.25	—	s
R_{duty}	Locked Protection Duty Ratio	T_{off}/T_{on}	—	13	—	—
$R_{DS(ON)}$	Output On Resistance	I_O= 300mA	—	1	1.67	Ω
		I_O= 500mA	—	1.25	1.8	
V_Z	Output Zener-Breakdown Voltage	(Note 7)	24	33	42	V

Notes: 5. Shall not exceed P_D and Safety Operation Area.
6. θ_{JA} should be confirmed with heat sink thermal resistance. SOT89 exposed pad soldered to minimum recommended landing pads (see Package Outline Dimension section) on 2"x2" two-layer 2oz.copper FR4 PCB with thermal vias in the exposed pad connecting to the copper flood on the bottom layer.
7. The V_Z value is in D.C voltage measurement. The V_Z may vary with coils in A.C. voltage measurements.

© Diodes Incorporated

Magnetic Characteristics (T_A = +25°C, V_{DD} = 2.5V to 15V, Note 8)

(1mT=10 Gauss)

Symbol	Characteristics	Min	Typ.	Max	Unit
B_{OP}	Operate Point	5	30	60	Gauss
B_{RP}	Release Point	-60	-30	-5	Gauss
B_{HY}	Hysteresis	20	60	120	Gauss

Note: 8. The magnetic characteristics may vary with supply voltage, operating temperature and after soldering.

Operating Characteristics

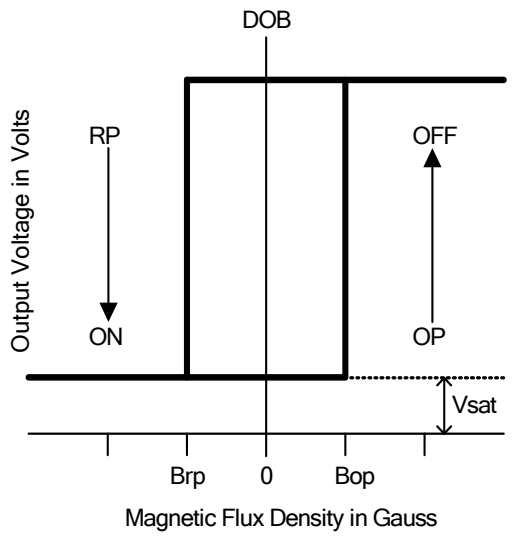

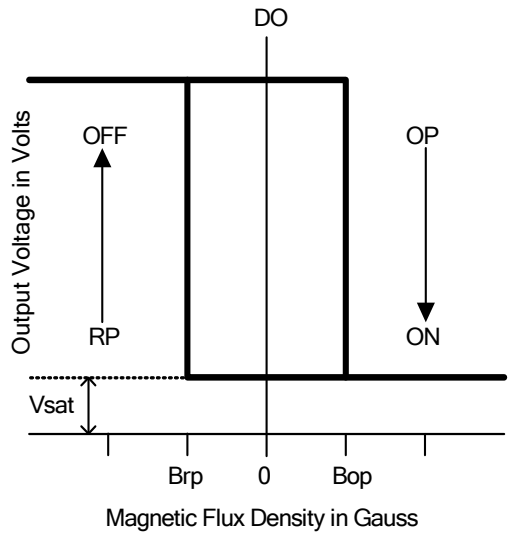

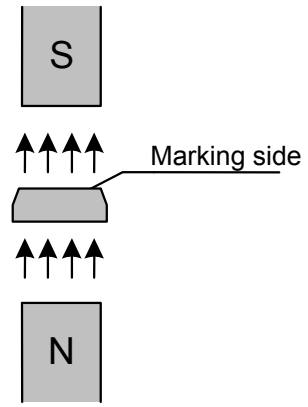

(SIP-4)

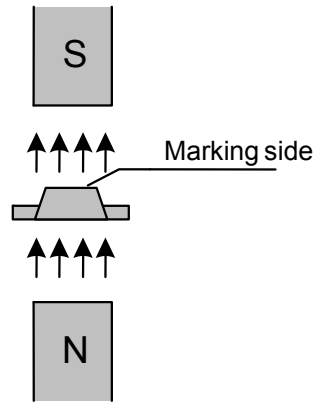

(SOT89-5)

© Diodes Incorporated

Performance Characteristics

(1) SIP-4

T_A(°C)	25	50	60	70	80	85	90	95	100
P_D(mW)	550	440	396	352	308	286	264	242	220
T_A(°C)	**105**	**110**	**115**	**120**	**125**	**130**	**135**	**140**	**150**
P_D(mW)	198	176	154	132	110	88	66	44	0

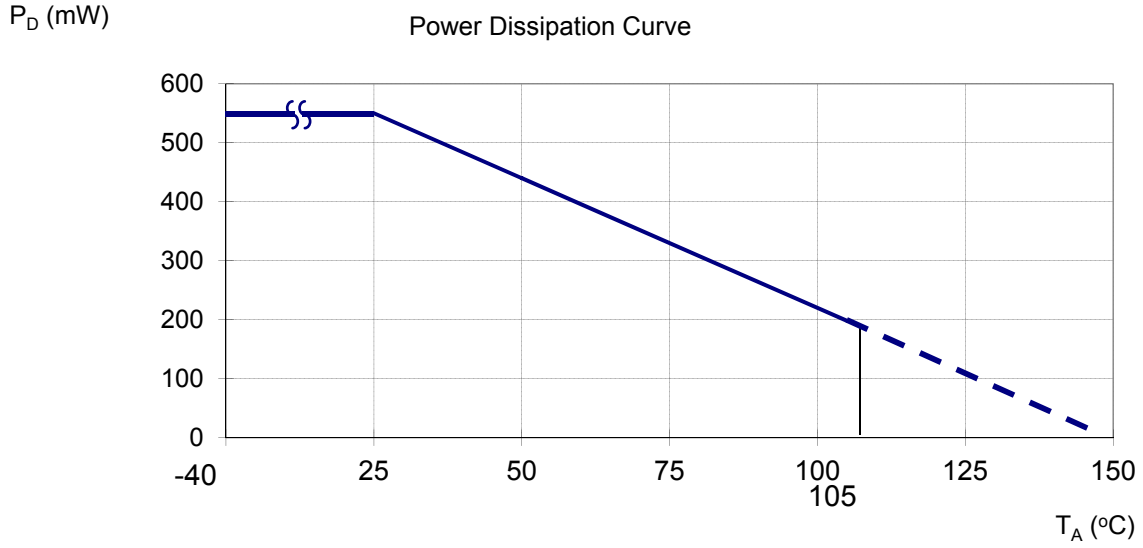

(2) SOT89-5

T_A (°C)	25	50	60	70	75	80	85	90	95	100
P_D (mW)	800	640	576	512	480	448	416	384	352	320
T_A (°C)	**105**	**110**	**115**	**120**	**125**	**130**	**135**	**140**	**145**	**150**
P_D (mW)	288	256	224	192	160	128	96	64	32	0

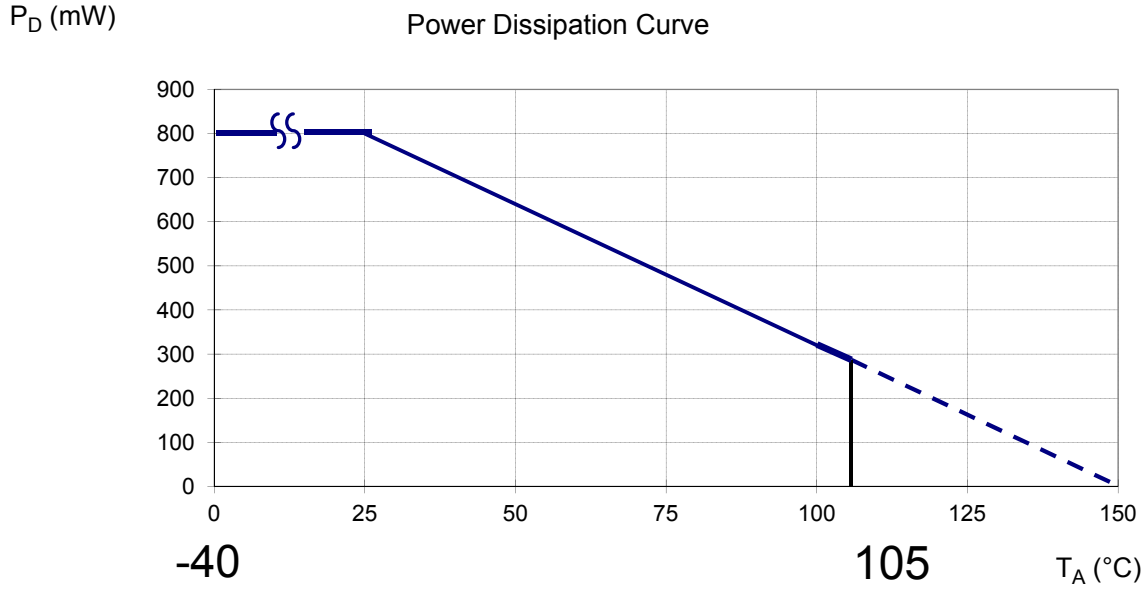

© Diodes Incorporated

Ordering Information (Note 9)

AH2984 - X G - X

Package	Green	Packing
P : SIP-4L Y : SOT89-5L	G : Green	B : Bulk 13 : Tape & Reel

Device	Package Code	Packaging (Note 9)	Bulk		13" Tape and Reel	
			Quantity	Part Number Suffix	Quantity	Part Number Suffix
AH2984-PG-B	P	SIP-4	1000	-B	NA	NA
AH2984-YG-13	Y	SOT89-5	NA	NA	2500/Tape & Reel	-13

Note: 9. For packaging details, go to our website at http://www.diodes.com/products/packages.html

Marking Information

(1) SIP-4

(Top View)

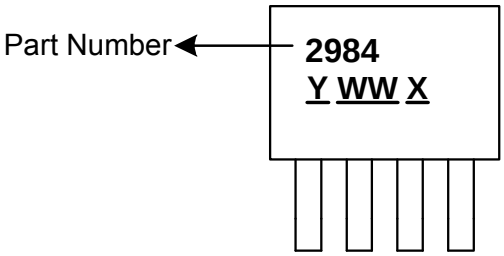

Y : Year : 0~9
WW : Week : 01~52, "52" represents 52 and 53 week
X : Internal Code : A~Z : Green

(2) SOT89-5

(Top View)

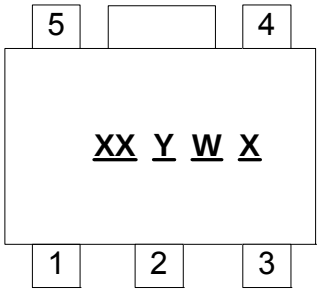

XX : Identification code
Y : Year : 0~9
W : Week : A~Z : 1~26 week;
a~z : 27~52 week;
z represents 52 and 53 week
X : Internal code
A~Z : Green

Device	Package	Identification Code
AH2984	SOT89-5	K1

© Diodes Incorporated

Package Outline Dimensions (All dimensions in mm.)

(1) Package type: SIP-4L

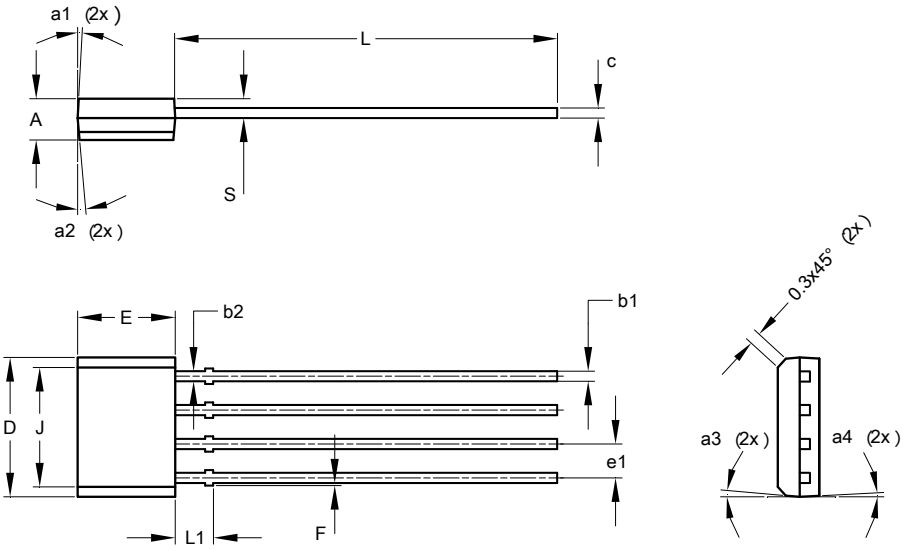

SIP-4			
Dim	**Min**	**Max**	**Typ**
A	1.45	1.65	1.55
b1	0.38	0.44	0.40
b2	—	—	0.48
c	0.35	0.45	0.40
D	5.12	5.32	5.22
e1	1.24	1.30	1.27
E	3.55	3.75	3.65
F	0.00	0.20	—
J	4.10	4.30	4.20
L	14.00	14.60	14.30
L1	1.32	1.52	1.42
S	0.63	0.83	0.73
a1	—	5°	3°
a2	4°	7°	5°
a3	4°	7°	5°
a4	—	5°	3°
All Dimensions in mm			

Min/Max (in mm)

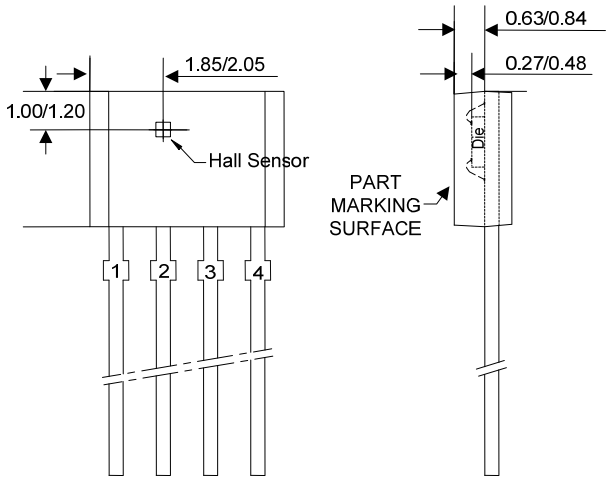

© Diodes Incorporated

Package Outline Dimensions (All dimensions in mm.)

(2) Package type: SOT89-5L

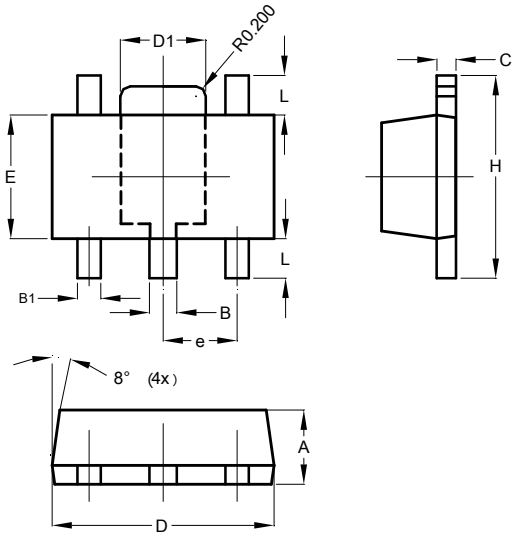

SOT89-5			
Dim	**Min**	**Max**	**Typ**
A	1.40	1.60	1.50
B	0.50	0.62	0.56
B1	0.44	0.54	0.48
C	0.35	0.43	0.38
D	4.40	4.60	4.50
D1	1.62	1.83	1.733
E	2.40	2.60	2.50
e	—	—	1.50
H	3.95	4.25	4.10
L	0.65	0.95	0.80
All Dimensions in mm			

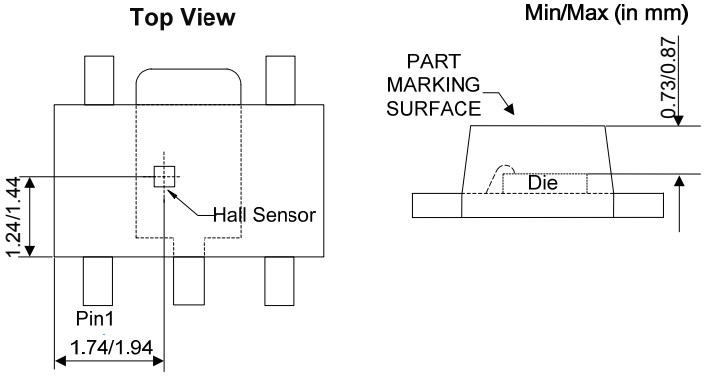

© Diodes Incorporated

IMPORTANT NOTICE

DIODES INCORPORATED MAKES NO WARRANTY OF ANY KIND, EXPRESS OR IMPLIED, WITH REGARDS TO THIS DOCUMENT, INCLUDING, BUT NOT LIMITED TO, THE IMPLIED WARRANTIES OF MERCHANTABILITY AND FITNESS FOR A PARTICULAR PURPOSE (AND THEIR EQUIVALENTS UNDER THE LAWS OF ANY JURISDICTION).

Diodes Incorporated and its subsidiaries reserve the right to make modifications, enhancements, improvements, corrections or other changes without further notice to this document and any product described herein. Diodes Incorporated does not assume any liability arising out of the application or use of this document or any product described herein; neither does Diodes Incorporated convey any license under its patent or trademark rights, nor the rights of others. Any Customer or user of this document or products described herein in such applications shall assume all risks of such use and will agree to hold Diodes Incorporated and all the companies whose products are represented on Diodes Incorporated website, harmless against all damages.

Diodes Incorporated does not warrant or accept any liability whatsoever in respect of any products purchased through unauthorized sales channel. Should Customers purchase or use Diodes Incorporated products for any unintended or unauthorized application, Customers shall indemnify and hold Diodes Incorporated and its representatives harmless against all claims, damages, expenses, and attorney fees arising out of, directly or indirectly, any claim of personal injury or death associated with such unintended or unauthorized application.

Products described herein may be covered by one or more United States, international or foreign patents pending. Product names and markings noted herein may also be covered by one or more United States, international or foreign trademarks.

This document is written in English but may be translated into multiple languages for reference. Only the English version of this document is the final and determinative format released by Diodes Incorporated.

LIFE SUPPORT

Diodes Incorporated products are specifically not authorized for use as critical components in life support devices or systems without the express written approval of the Chief Executive Officer of Diodes Incorporated. As used herein:

A. Life support devices or systems are devices or systems which:

1. are intended to implant into the body, or
2. support or sustain life and whose failure to perform when properly used in accordance with instructions for use provided in the labeling can be reasonably expected to result in significant injury to the user.

B. A critical component is any component in a life support device or system whose failure to perform can be reasonably expected to cause the failure of the life support device or to affect its safety or effectiveness.

Customers represent that they have all necessary expertise in the safety and regulatory ramifications of their life support devices or systems, and acknowledge and agree that they are solely responsible for all legal, regulatory and safety-related requirements concerning their products and any use of Diodes Incorporated products in such safety-critical, life support devices or systems, notwithstanding any devices- or systems-related information or support that may be provided by Diodes Incorporated. Further, Customers must fully indemnify Diodes Incorporated and its representatives against any damages arising out of the use of Diodes Incorporated products in such safety-critical, life support devices or systems.

Copyright © 2013, Diodes Incorporated

www.diodes.com

Looking for pricing, stock, or lifecycle information?

Click below to explore more details on WIN SOURCE:

- View AH2984-PG-B on WIN SOURCE
- Diodes Incorporated Information

Optimize Your Supply Chain with WIN SOURCE Solutions

- Global Sourcing Solution
- Obsolete Management
- Cost Control Management
- Shortage Management
- Alternative Solution
- Excess Inventory Management