THE DATASHEET OF

STQ2HNK60ZR-AP

www.win-source.net 0086-755-83957316

STD2HNK60Z, STD2HNK60Z-1
STF2HNK60Z, STQ2HNK60ZR-AP

Datasheet

N-channel 600 V, 3.5 Ω typ., 2 A SuperMESH™ Power MOSFETs in DPAK, IPAK, TO-220FP and TO-92 packages

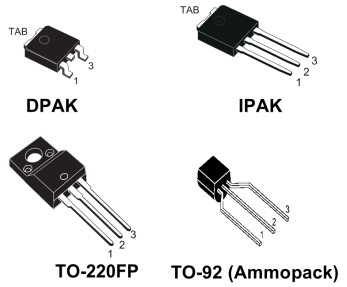

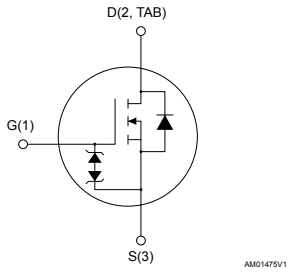

Product status
STD2HNK60Z
STD2HNK60Z-1
STF2HNK60Z
STQ2HNK60ZR-AP

Features

Order code	V_{DS}	$R_{DS(on)}$max.	I_D	Package
STD2HNK60Z	600 V	4.8 Ω	2 A	DPAK
STD2HNK60Z-1				IPAK
STF2HNK60Z				TO-220FP
STQ2HNK60ZR-AP			0.5 A	TO-92

- Extremely high dv/dt capability
- 100% avalanche tested
- Gate charge minimized
- Zener-protected

Applications

- Switching applications

Description

These high-voltage devices are Zener-protected N-channel Power MOSFETs developed using the SuperMESH™ technology by STMicroelectronics, an optimization of the well-established PowerMESH™. In addition to a significant reduction in on-resistance, these devices are designed to ensure a high level of dv/dt capability for the most demanding applications.

1 Electrical ratings

Table 1. Absolute maximum ratings

Symbol	Parameter	Value			Unit
		DPAK, IPAK	TO-220FP	TO-92	
V_{DS}	Drain-source voltage	600			V
V_{GS}	Gate-source voltage	±30			V
I_D	Drain current (continuous) at T_C = 25 °C	2.0	2.0 (1)	0.5	A
I_D	Drain current (continuous) at T_C = 100 °C	1.26	1.26 (1)	0.32	A
I_{DM} (2)	Drain current (pulsed)	8	8 (1)	2	A
P_{TOT}	Total dissipation at T_C = 25 °C	45	20	3	W
ESD	Gate-source human body model (R = 1.5 kΩ, C = 100 pF)	2			kV
V_{ISO}	Insulation withstand voltage (RMS) from all three leads to external heat-sink (t = 1 s, T_C = 25 °C)		2500		V
dv/dt (3)	Peak diode recovery voltage slope	4.5			V/ns
T_j	Operating junction temperature range	-55 to 150			°C
T_{stg}	Storage temperature range				

1. *Limited by maximum junction temperature.*
2. *Pulse width limited by safe operating area.*
3. *I_{SD} ≤ 2 A, di/dt ≤ 200 A/µs, V_{DSpeak} ≤ $V_{(BR)DSS}$, V_{DD} = 80% $V_{(BR)DSS}$.*

Table 2. Thermal data

Symbol	Parameter	Value			Unit
		DPAK, IPAK	TO-220FP	TO-92	
$R_{thj-case}$	Thermal resistance junction-case	2.77	6.25		°C/W
$R_{thj-amb}$	Thermal resistance junction-ambient	100	62.5	120	°C/W
$R_{thj-pcb}$ (1)	Thermal resistance junction-pcb	50			°C/W
$R_{thj-lead}$	Thermal resistance junction-lead			40	°C/W

1. *When mounted on 1 inch² FR-4, 2 Oz copper board.*

Table 3. Avalanche characteristics

Symbol	Parameter	Value	Unit
I_{AR}	Avalanche current, repetitive or not-repetitive (pulse width limited by T_j Max)	2	A
E_{AS}	Single pulse avalanche energy (starting T_j = 25 °C, I_D = I_{AR}, V_{DD} = 50 V)	120	mJ

2 Electrical characteristics

(T_{CASE} = 25 °C unless otherwise specified)

Table 4. On/off states

Symbol	Parameter	Test conditions	Min.	Typ.	Max.	Unit
$V_{(BR)DSS}$	Drain-source breakdown voltage	I_D = 1 mA, V_{GS} = 0 V	600			V
I_{DSS}	Zero gate voltage drain current	V_{GS} = 0 V, V_{DS} = 600 V			1	µA
		V_{GS} = 0 V, V_{DS} = 600 V, T_C = 125 °C (1)			50	µA
I_{GSS}	Gate body leakage current	V_{DS} = 0 V, V_{GS} = ±20 V			±10	µA
$V_{GS(th)}$	Gate threshold voltage	V_{DS} = V_{GS}, I_D = 50 µA	3	3.75	4.5	V
$R_{DS(on)}$	Static drain-source on resistance	V_{GS} = 10 V, I_D = 1 A		3.5	4.8	Ω

1. *Defined by design, not subject to production test.*

Table 5. Dynamic

Symbol	Parameter	Test conditions	Min.	Typ.	Max.	Unit
C_{iss}	Input capacitance	V_{DS} = 25 V, f = 1 MHz, V_{GS} = 0 V	-	280		pF
C_{oss}	Output capacitance			38		
C_{rss}	Reverse transfer capacitance			7		
$C_{oss\ eq.}$ (1)	Equivalent output capacitance	V_{DS} = 0 to 480 V, V_{GS} = 0 V	-	30		pF
Q_g	Total gate charge	V_{DD} = 480 V, I_D = 2 A, V_{GS} = 0 to 10 V (see Figure 18. Test circuit for gate charge behavior)	-	11	15	nC
Q_{gs}	Gate-source charge			2.25		
Q_{gd}	Gate-drain charge			6		

1. *$C_{oss\ eq.}$ is defined as a constant equivalent capacitance giving the same charging time as C_{oss} when V_{DS} increases from 0 to 80% V_{DSS}.*

Table 6. Switching times

Symbol	Parameter	Test conditions	Min.	Typ.	Max.	Unit
$t_{d(on)}$	Turn-on delay time	V_{DD} = 300 V, I_D = 1 A, R_G = 4.7 Ω, V_{GS} = 10 V (see Figure 17. Test circuit for resistive load switching times and Figure 22. Switching time waveform)	-	10	-	ns
t_r	Voltage rise time			30		
$t_{d(off)}$	Turn-off delay time			23		
t_f	Fall time			50		

Table 7. Source drain diode

Symbol	Parameter	Test conditions	Min.	Typ.	Max.	Unit
I_{SD}	Source-drain current		-		2	A
I_{SDM} (1)	Source-drain current (pulsed)				8	
V_{SD} (2)	Forward on voltage	I_{SD} = 2 A, V_{GS} = 0 V	-		1.3	V
t_{rr}	Reverse recovery time	I_{SD} = 2 A, di/dt = 100 A/µs	-	178		ns
Q_{rr}	Reverse recovery charge	V_{DD} = 20 V (see Figure 19. Test circuit for inductive load switching and diode recovery times)		445		nC
I_{RRM}	Reverse recovery current			5		A
t_{rr}	Reverse recovery time	I_{SD} = 2 A, di/dt = 100 A/µs	-	200		ns
Q_{rr}	Reverse recovery charge	V_{DD} = 20 V, T_j = 150 °C (see Figure 19. Test circuit for inductive load switching and diode recovery times)		500		nC
I_{RRM}	Reverse recovery current			5		A

1. *Pulse width limited by safe operating area.*
2. *Pulsed: pulse duration = 300 µs, duty cycle 1.5%.*

2.1 Electrical characteristics curves

Figure 1. Safe operating area forDPAK/IPAK

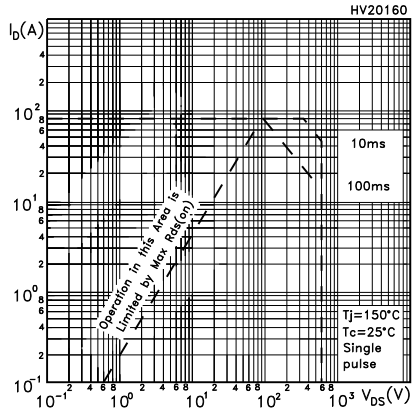

Figure 2. Thermal impedance for DPAK/IPAK

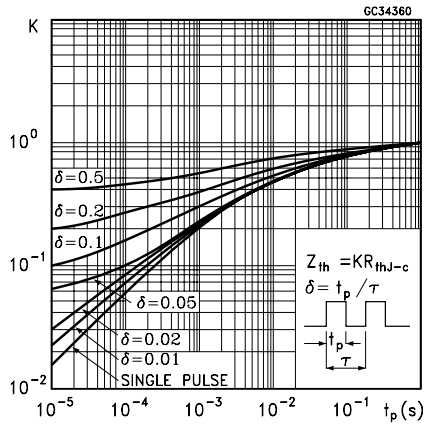

Figure 3. Safe operating area for TO-220FP

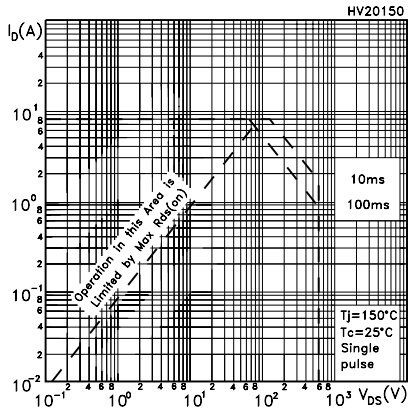

Figure 4. Thermal impedance for TO-220FP

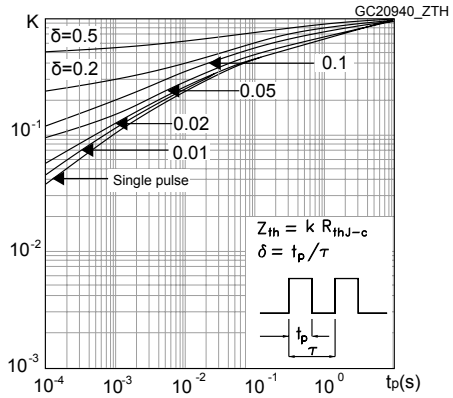

Figure 5. Safe operating area for TO-92

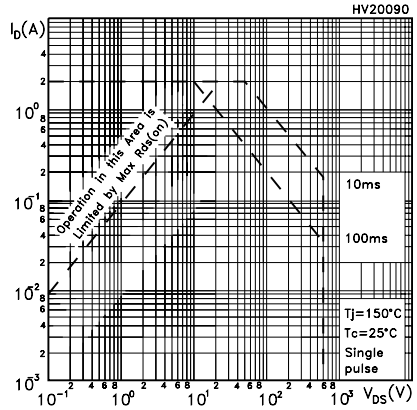

Figure 6. Thermal impedance for TO-92

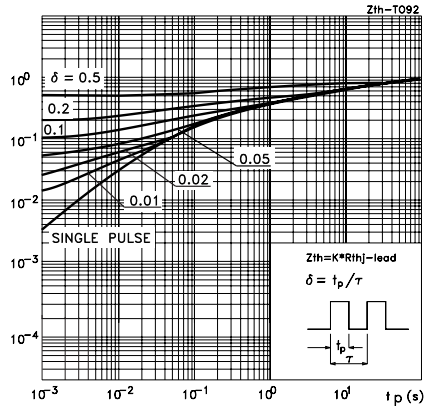

Figure 7. Output characterisics

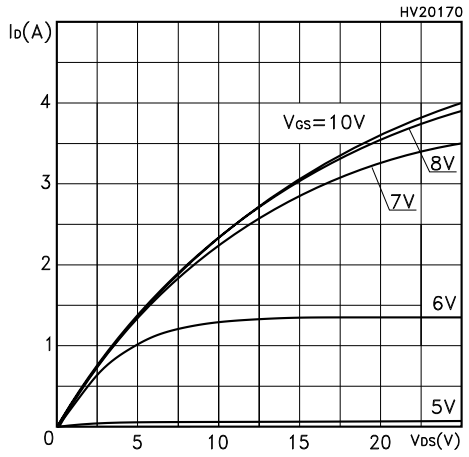

Figure 8. Transfer characteristics

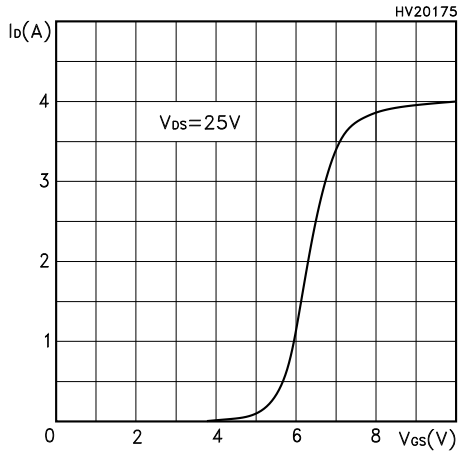

Figure 9. Normalized $V_{(BR)DSS}$ vs temperature

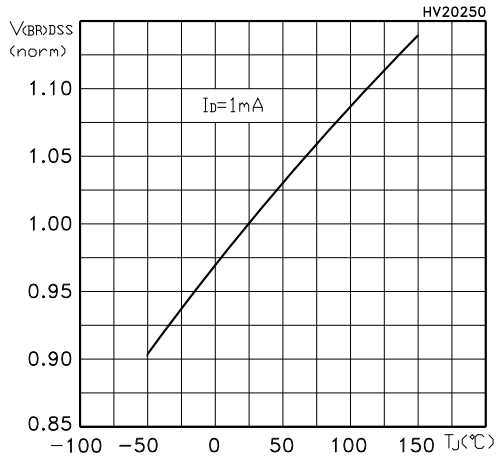

Figure 10. Static drain-source on-resistance

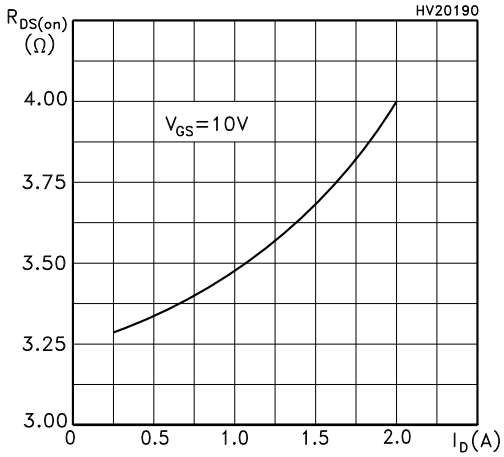

Figure 11. Gate charge vs gate-source voltage

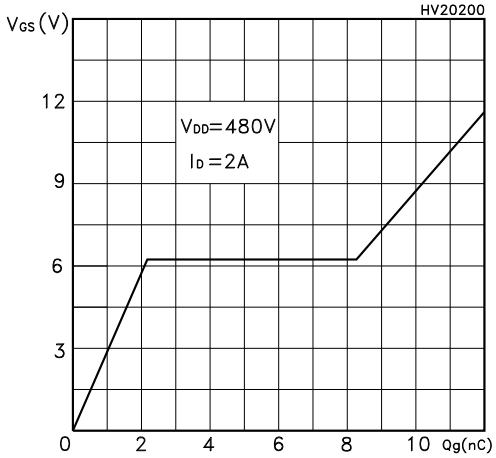

Figure 12. Capacitance variations

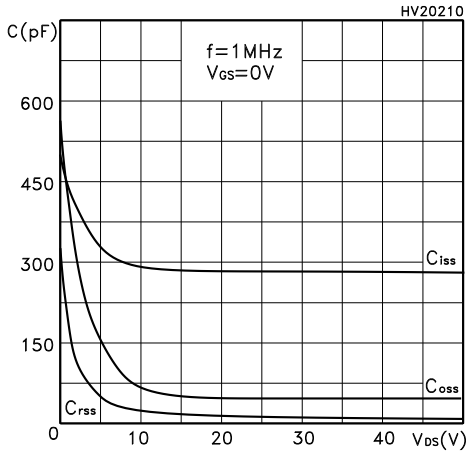

Figure 13. Normalized gate threshold voltage vs temperature

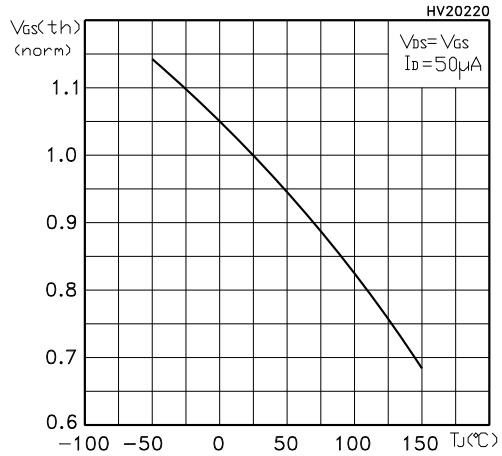

Figure 14. Normalized on-resistance vs temperature

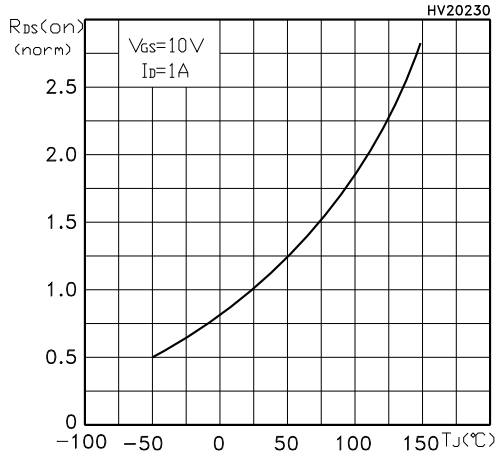

Figure 15. Source-drain diode forward characteristics

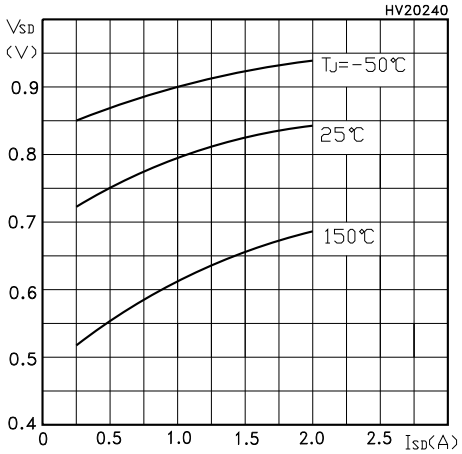

Figure 16. Maximum avalanche energy vs temperature

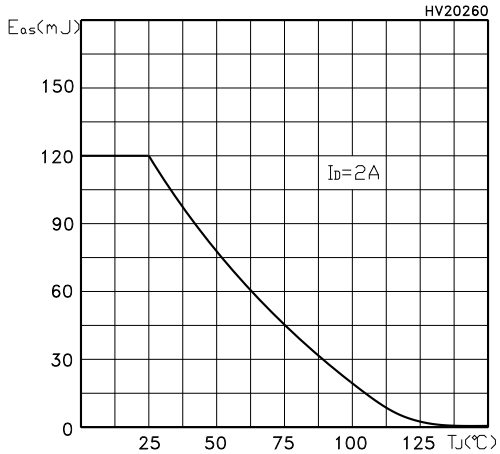

3 Test circuits

Figure 17. Test circuit for resistive load switching times

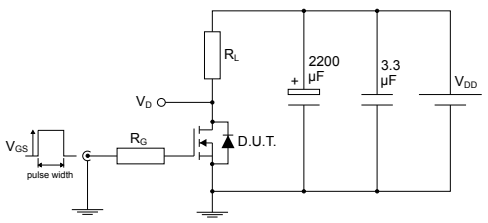

Figure 18. Test circuit for gate charge behavior

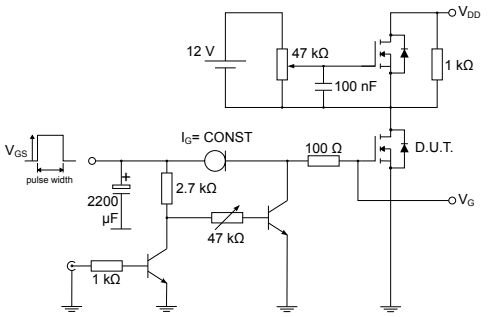

Figure 19. Test circuit for inductive load switching and diode recovery times

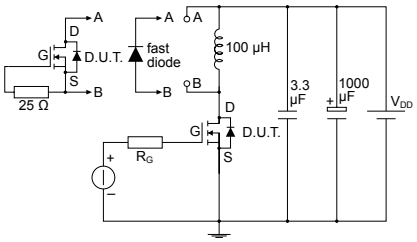

Figure 20. Unclamped inductive load test circuit

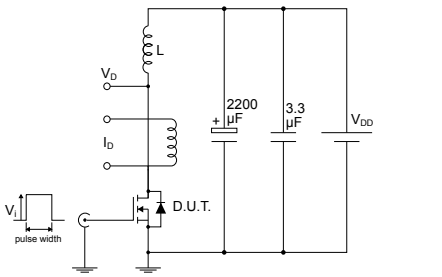

Figure 21. Unclamped inductive waveform

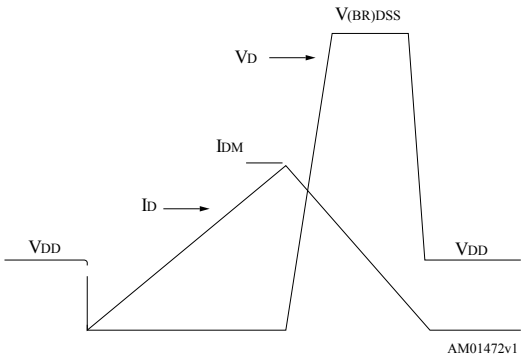

Figure 22. Switching time waveform

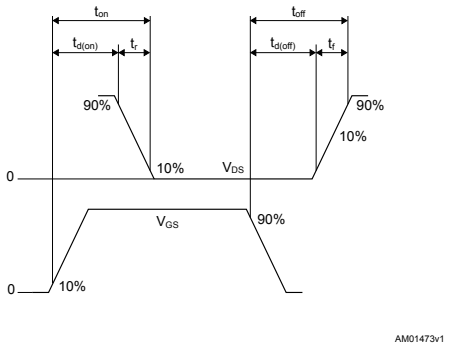

4 Package information

In order to meet environmental requirements, ST offers these devices in different grades of ECOPACK® packages, depending on their level of environmental compliance. ECOPACK® specifications, grade definitions and product status are available at: www.st.com. ECOPACK® is an ST trademark.

4.1 DPAK (TO-252) type A package information

Figure 23. DPAK (TO-252) type A package outline

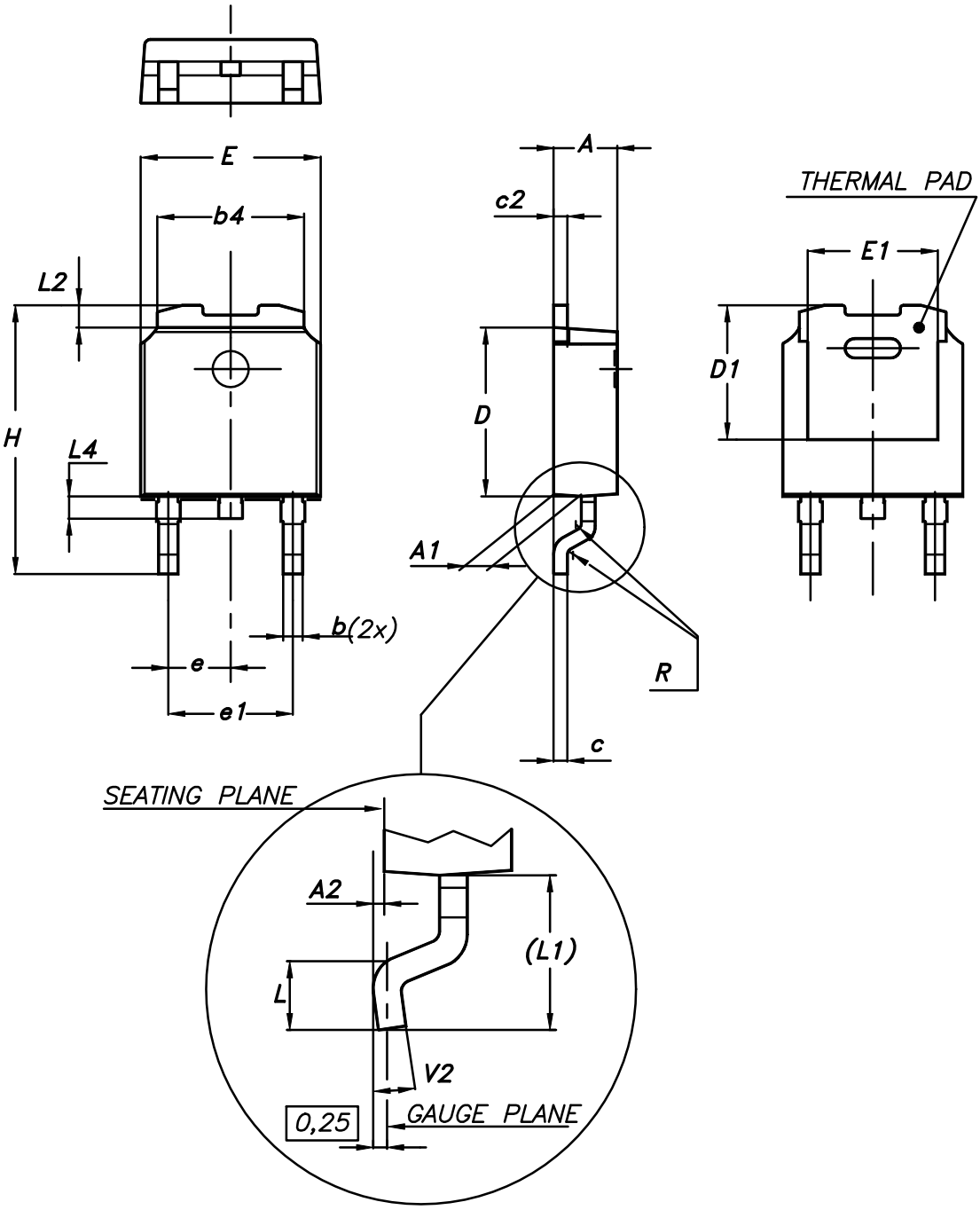

0068772_A_25

Table 8. DPAK (TO-252) type A mechanical data

Dim.	mm		
	Min.	Typ.	Max.
A	2.20		2.40
A1	0.90		1.10
A2	0.03		0.23
b	0.64		0.90
b4	5.20		5.40
c	0.45		0.60
c2	0.48		0.60
D	6.00		6.20
D1	4.95	5.10	5.25
E	6.40		6.60
E1	4.60	4.70	4.80
e	2.159	2.286	2.413
e1	4.445	4.572	4.699
H	9.35		10.10
L	1.00		1.50
(L1)	2.60	2.80	3.00
L2	0.65	0.80	0.95
L4	0.60		1.00
R		0.20	
V2	0°		8°

4.2 DPAK (TO-252) type C package information

Figure 24. DPAK (TO-252) type C package outline

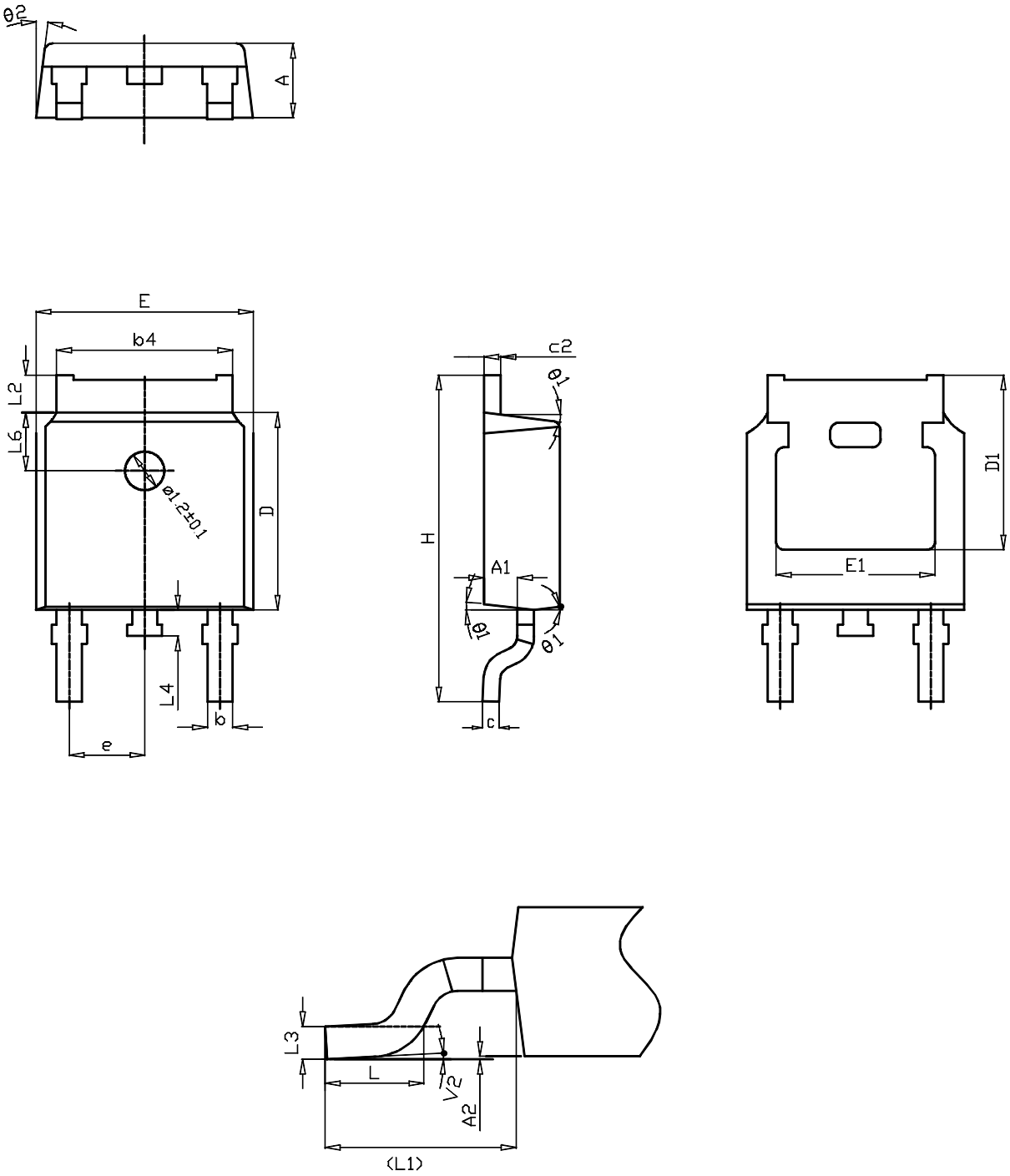

Table 9. DPAK (TO-252) type C mechanical data

Dim.	mm		
	Min.	Typ.	Max.
A	2.20	2.30	2.38
A1	0.90	1.01	1.10
A2	0.00		0.10
b	0.72		0.85
b4	5.13	5.33	5.46
c	0.47		0.60
c2	0.47		0.60
D	6.00	6.10	6.20
D1	5.25		
E	6.50	6.60	6.70
E1	4.70		
e	2.186	2.286	2.386
H	9.80	10.10	10.40
L	1.40	1.50	1.70
L1		2.90 REF	
L2	0.90		1.25
L3		0.51 BSC	
L4	0.60	0.80	1.00
L6		1.80 BSC	
θ1	5°	7°	9°
θ2	5°	7°	9°
V2	0°		8°

4.3 DPAK (TO-252) type E package information

Figure 25. DPAK (TO-252) type E package outline

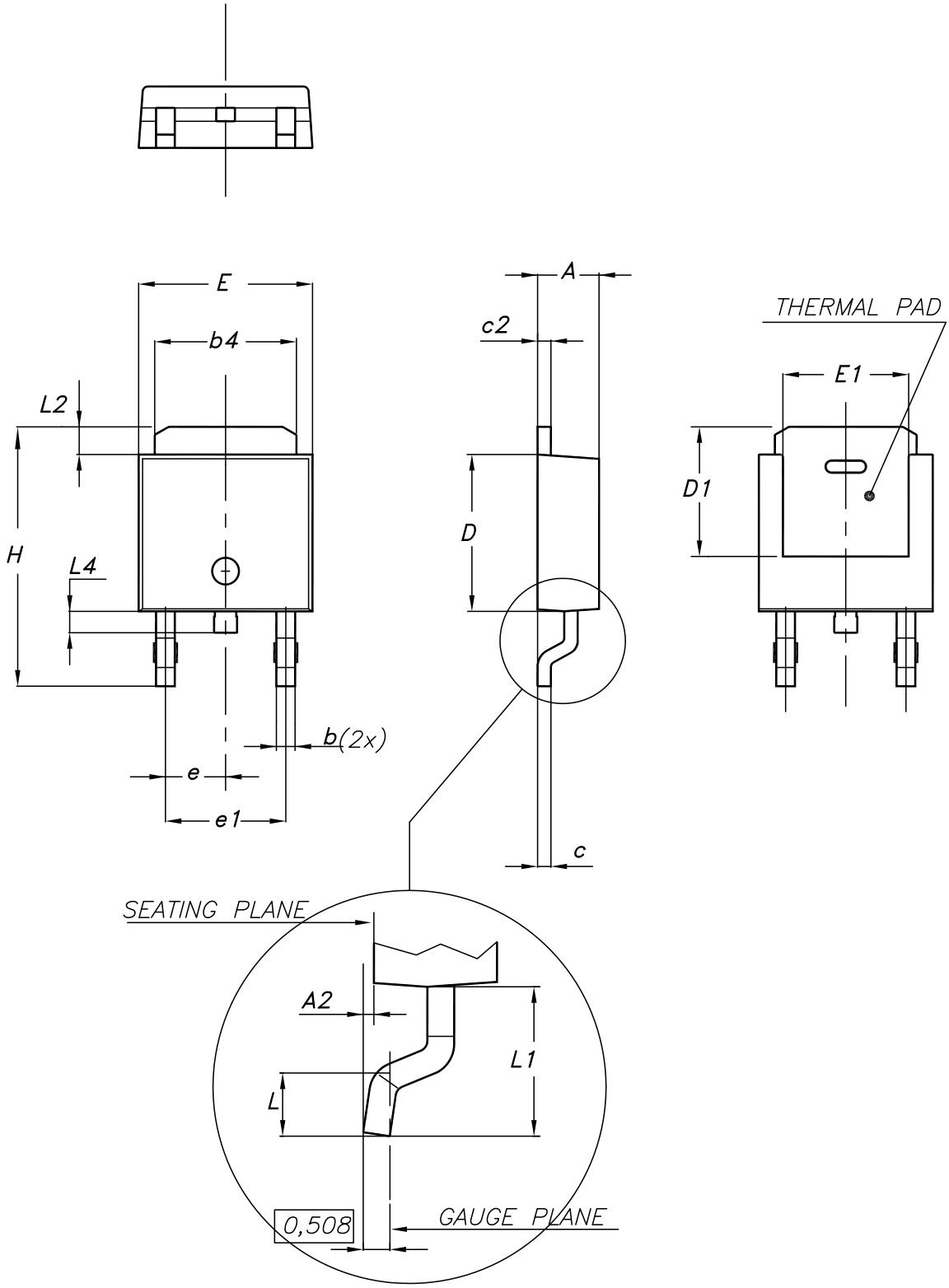

0068772_type-E_rev.25

Table 10. DPAK (TO-252) type E mechanical data

Dim.	mm		
	Min.	Typ.	Max.
A	2.18		2.39
A2			0.13
b	0.65		0.884
b4	4.95		5.46
c	0.46		0.61
c2	0.46		0.60
D	5.97		6.22
D1	5.21		
E	6.35		6.73
E1	4.32		
e		2.286	
e1		4.572	
H	9.94		10.34
L	1.50		1.78
L1		2.74	
L2	0.89		1.27
L4			1.02

Figure 26. DPAK (TO-252) recommended footprint (dimensions are in mm)

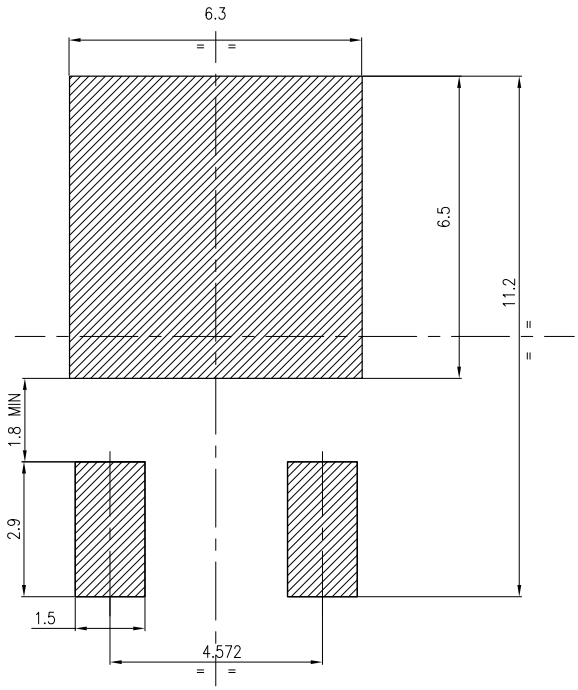

FP_0068772_25

4.4 DPAK (TO-252) packing information

Figure 27. DPAK (TO-252) tape outline

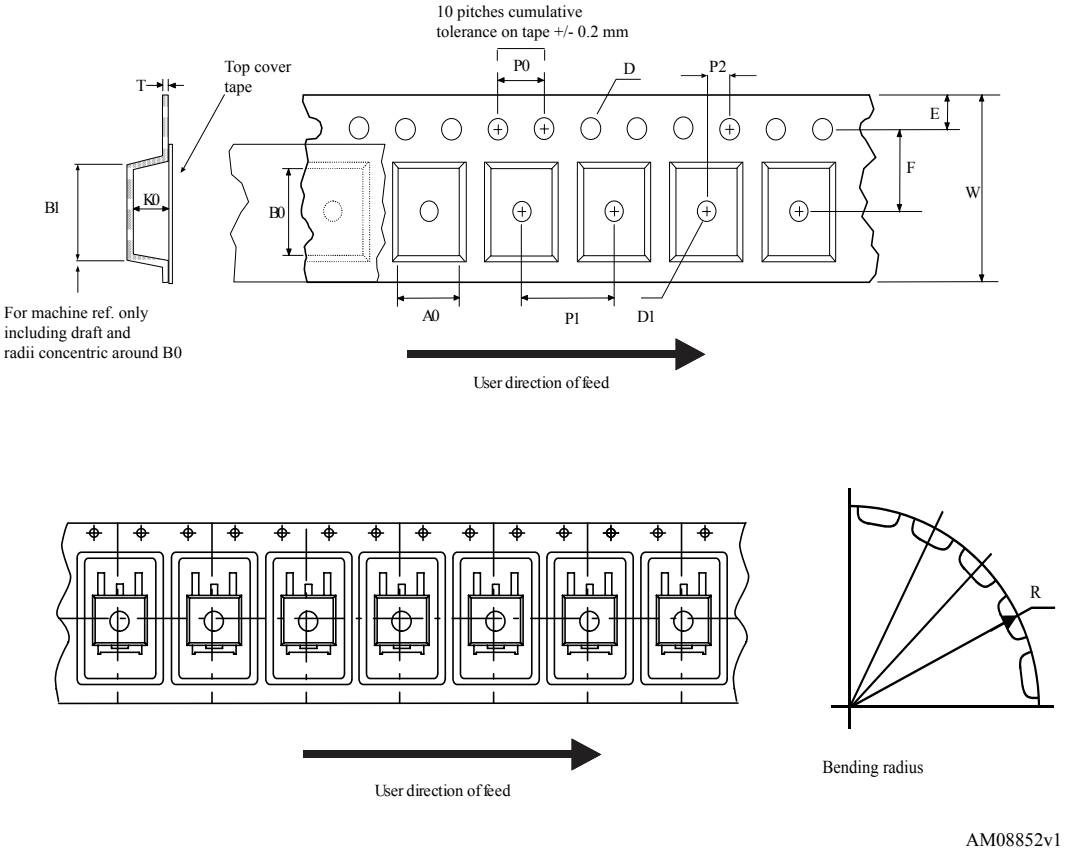

Figure 28. DPAK (TO-252) reel outline

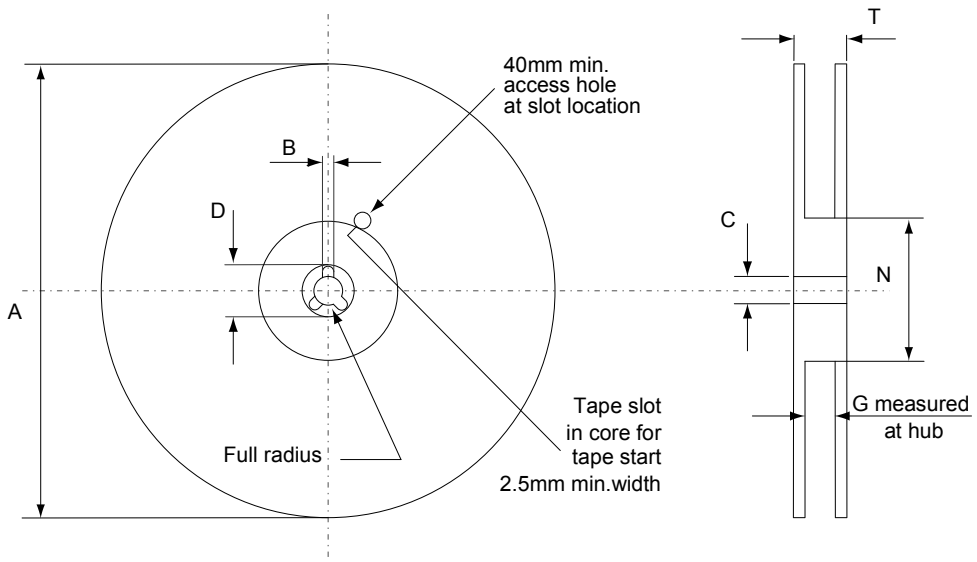

AM06038v1

Table 11. DPAK (TO-252) tape and reel mechanical data

Tape			Reel		
Dim.	mm		Dim.	mm	
	Min.	Max.		Min.	Max.
A0	6.8	7	A		330
B0	10.4	10.6	B	1.5	
B1		12.1	C	12.8	13.2
D	1.5	1.6	D	20.2	
D1	1.5		G	16.4	18.4
E	1.65	1.85	N	50	
F	7.4	7.6	T		22.4
K0	2.55	2.75			
P0	3.9	4.1	Base qty.		2500
P1	7.9	8.1	Bulk qty.		2500
P2	1.9	2.1			
R	40				
T	0.25	0.35			
W	15.7	16.3			

4.5 IPAK (TO-251) type A package information

Figure 29. IPAK (TO-251) type A package outline

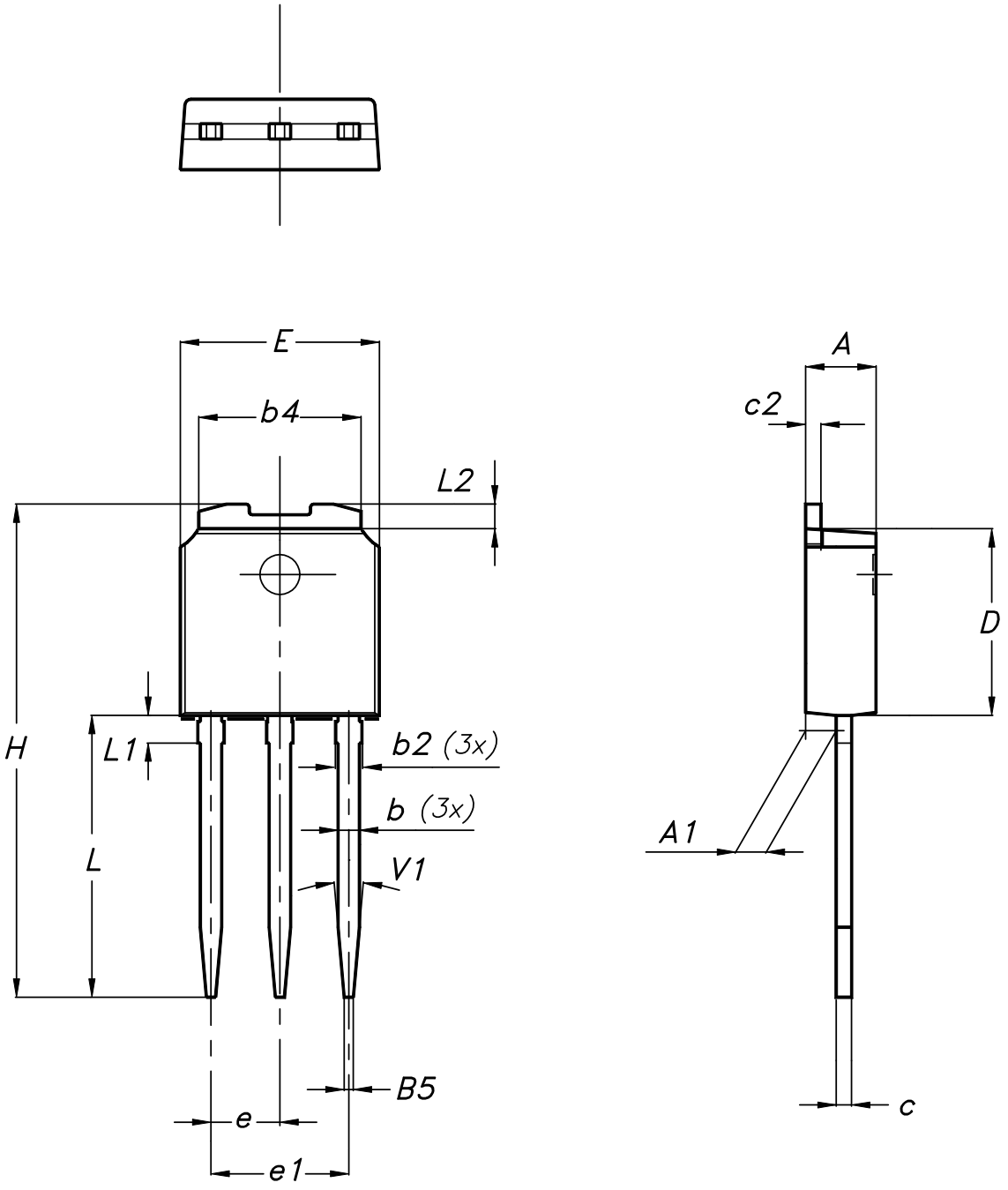

Table 12. IPAK (TO-251) type A package mechanical data

Dim.	mm		
	Min.	Typ.	Max.
A	2.20		2.40
A1	0.90		1.10
b	0.64		0.90
b2			0.95
b4	5.20		5.40
B5		0.30	
c	0.45		0.60
c2	0.48		0.60
D	6.00		6.20
E	6.40		6.60
e		2.28	
e1	4.40		4.60
H		16.10	
L	9.00		9.40
L1	0.80		1.20
L2		0.80	1.00
V1		10°	

4.6 IPAK (TO-251) type C package information

Figure 30. IPAK (TO-251) type C package outline

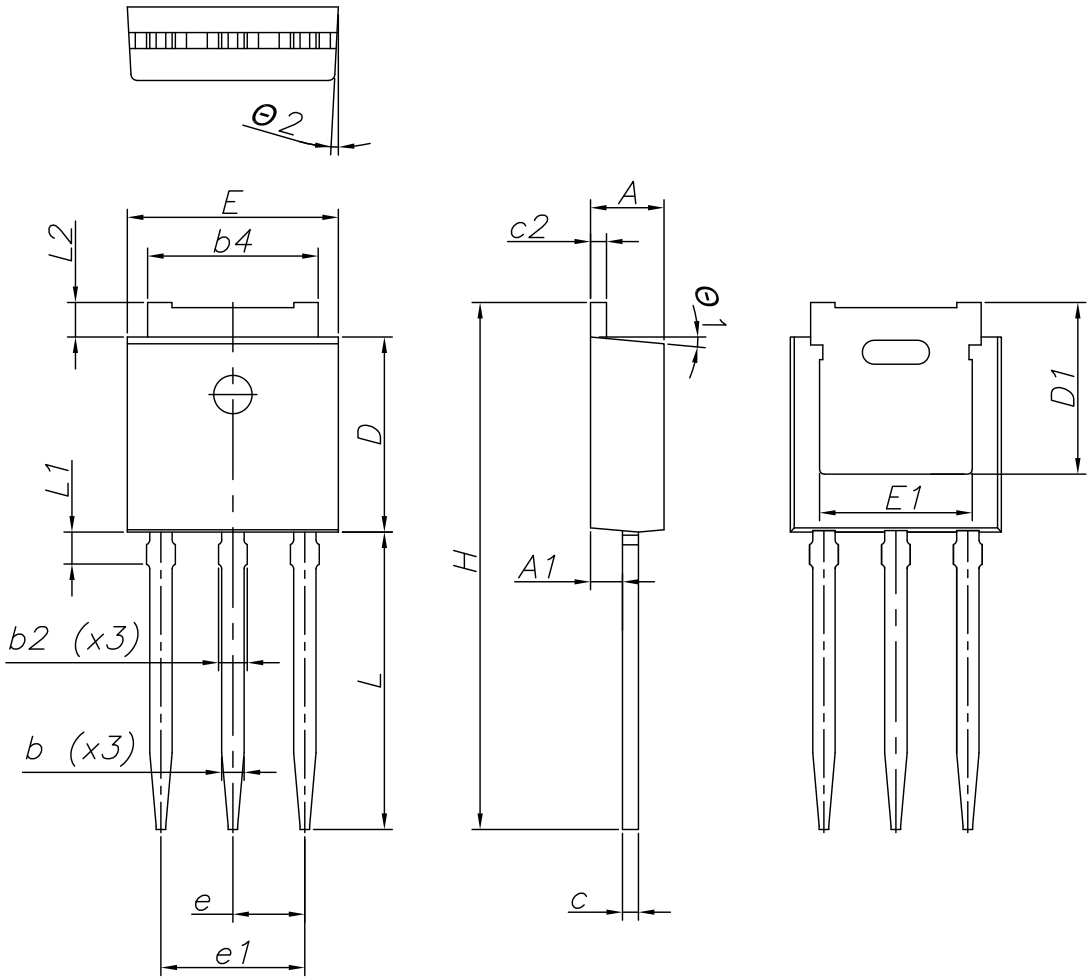

0068771_IK_typeC_rev14

Table 13. IPAK (TO-251) type C package mechanical data

Dim.	mm		
	Min.	Typ.	Max.
A	2.20	2.30	2.35
A1	0.90	1.00	1.10
b	0.66		0.79
b2			0.90
b4	5.23	5.33	5.43
c	0.46		0.59
c2	0.46		0.59
D	6.00	6.10	6.20
D1	5.20	5.37	5.55
E	6.50	6.60	6.70
E1	4.60	4.78	4.95
e	2.20	2.25	2.30
e1	4.40	4.50	4.60
H	16.18	16.48	16.78
L	9.00	9.30	9.60
L1	0.80	1.00	1.20
L2	0.90	1.08	1.25
θ1	3°	5°	7°
θ2	1°	3°	5°

4.7 TO-220FP package information

Figure 31. TO-220FP package outline

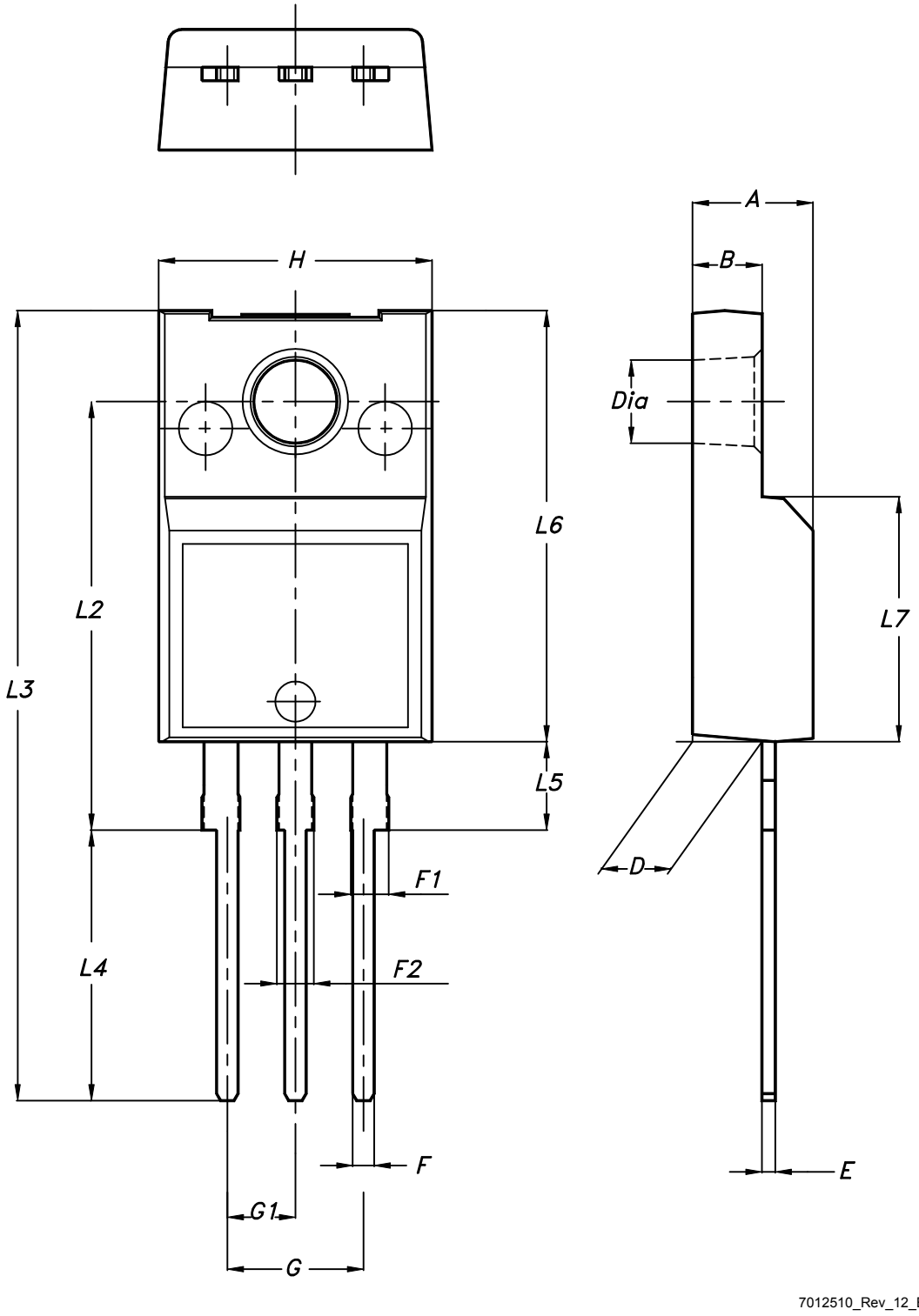

Table 14. TO-220FP package mechanical data

Dim.	mm		
	Min.	Typ.	Max.
A	4.4		4.6
B	2.5		2.7
D	2.5		2.75
E	0.45		0.7
F	0.75		1
F1	1.15		1.70
F2	1.15		1.70
G	4.95		5.2
G1	2.4		2.7
H	10		10.4
L2		16	
L3	28.6		30.6
L4	9.8		10.6
L5	2.9		3.6
L6	15.9		16.4
L7	9		9.3
Dia	3		3.2

4.8 TO-92 Ammopack package information

Figure 32. TO-92 Ammopack package outline

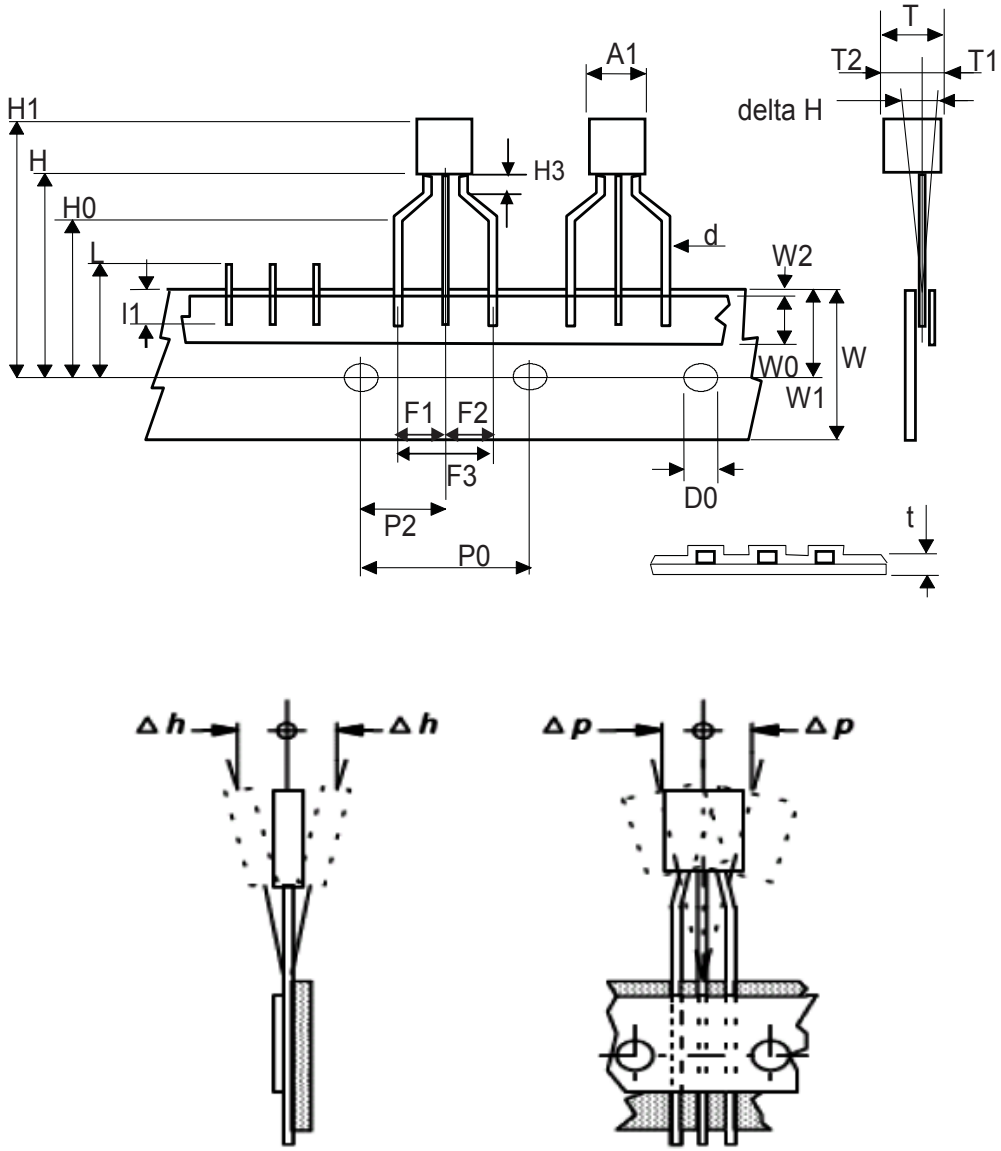

0050910_Rev_22

Table 15. TO-92 Ammopack mechanical data

Dim.	mm		
	Min.	Typ.	Max.
A1			4.80
T			3.80
T1			1.60
T2			2.30
d	0.45	0.47	0.48
P0	12.50	12.70	12.90
P2	5.65	6.35	7.05
F1, F2	2.40	2.50	2.94
F3	4.98	5.08	5.48
delta H	-2.00		2.00
W	17.50	18.00	19.00
W0	5.50	6.00	6.50
W1	8.50	9.00	9.25
W2			0.50
H		18.50	21.00
H0	15.50	16.00	18.20
H1		25.00	27.00
H3	0.50	1.00	2.00
D0	3.80	4.00	4.20
t			0.90
L			11.00
l1	3.00		
delta P	-1.00		1.00

5 Ordering information

Table 16. Order codes

Order code	Marking	Package	Packing
STD2HNK60Z	D2HNK60Z	DPAK	Tape and reel
STD2HNK60Z-1	D2HNK60Z	IPAK	Tube
STF2HNK60Z	F2HNK60Z	TO-220FP	Tube
STQ2HNK60ZR-AP	Q2HNK60ZR	TO-92	Ammopack

Revision history

Table 17. Document revision history

Date	Version	Changes
09-Mar-2004	1	First release
23-Mar-2004	2	Modified title
02-Apr-2005	3	Added new section: Electrical characteristics (curves)
06-Mar-2006	4	Inserted DPAK. The document has been reformatted
25-May-2012	5	Corrected unit in Table 5: On/off states
04-Jun-2018	6	Removed maturity status indication from cover page. The document status is production data. Updated title and features in cover page, Section 1 Electrical ratings, Section 2 Electrical characteristics and Section 4 Package information. Minor text changes.

Contents

1 Electrical ratings 2

2 Electrical characteristics 3

2.1 Electrical characteristics curves 5

3 Test circuits 8

4 Package information 9

4.1 DPAK (TO-252) type A package information 9

4.2 DPAK (TO-252) type C package information 11

4.3 DPAK (TO-252) type E package information 13

4.4 DPAK (TO-252) packing information 15

4.5 IPAK (TO-251) type A package information 17

4.6 IPAK (TO-251) type C package information 19

4.7 TO-220FP package information 21

4.8 TO-92 Ammopack package information 23

5 Ordering information 26

Revision history 27

IMPORTANT NOTICE – PLEASE READ CAREFULLY

STMicroelectronics NV and its subsidiaries (“ST”) reserve the right to make changes, corrections, enhancements, modifications, and improvements to ST products and/or to this document at any time without notice. Purchasers should obtain the latest relevant information on ST products before placing orders. ST products are sold pursuant to ST’s terms and conditions of sale in place at the time of order acknowledgement.

Purchasers are solely responsible for the choice, selection, and use of ST products and ST assumes no liability for application assistance or the design of Purchasers’ products.

No license, express or implied, to any intellectual property right is granted by ST herein.

Resale of ST products with provisions different from the information set forth herein shall void any warranty granted by ST for such product.

ST and the ST logo are trademarks of ST. All other product or service names are the property of their respective owners.

Information in this document supersedes and replaces information previously supplied in any prior versions of this document.

© 2018 STMicroelectronics – All rights reserved

Looking for pricing, stock, or lifecycle information?

Click below to explore more details on WIN SOURCE:

- View STQ2HNK60ZR-AP on WIN SOURCE
- STMicroelectronics Information

Optimize Your Supply Chain with WIN SOURCE Solutions

- Global Sourcing Solution
- Obsolete Management
- Cost Control Management
- Shortage Management
- Alternative Solution
- Excess Inventory Management