THE DATASHEET OF

ADT7470ARQZ-REEL7

www.win-source.net 0086-755-83957316

Temperature Sensor Hub and Fan Controller

Data Sheet **ADT7470**

FEATURES

Monitors up to 10 remote temperature sensors
Monitors and controls speed of up to 4 fans independently
PWM outputs drive each fan under software control
$\overline{\text{FULL_SPEED}}$ input allows fans to be blasted to maximum speed by external hardware
$\overline{\text{SMBALERT}}$ interrupt signals failures to system controller
Three-state ADDR pin allows up to 3 devices on a single bus
Temperature decoder interprets TMP05 temperature sensors and communicates values over I²C bus
Limit comparison of all monitored values
Supports fast I²C standard (400 kHz max)
Meets SMBus 2.0 electrical specifications (fully SMBus 1.1-compliant)

APPLICATIONS

Servers
Networking and telecommunications equipment
Desktops

GENERAL DESCRIPTION

The ADT7470[1] controller is a multichannel temperature sensor and PWM fan controller and fan speed monitor for systems requiring active cooling. It is designed to interface directly to an I²C® bus. The ADT7470 can monitor up to 10 daisy-chained TMP05 temperature sensors. It can also monitor and control the speed of four fans, in automatic or in manual control loops.

A $\overline{\text{FULL_SPEED}}$ input is provided to allow the fans to be blasted to maximum speed, via external hardware control, under extreme thermal conditions or on system startup. An $\overline{\text{SMBALERT}}$ interrupt communicates error conditions such as fan under speed and over temperature measurements to the system service processor. Individual error conditions can then be read from status registers over the I²C bus.

FUNCTIONAL BLOCK DIAGRAM

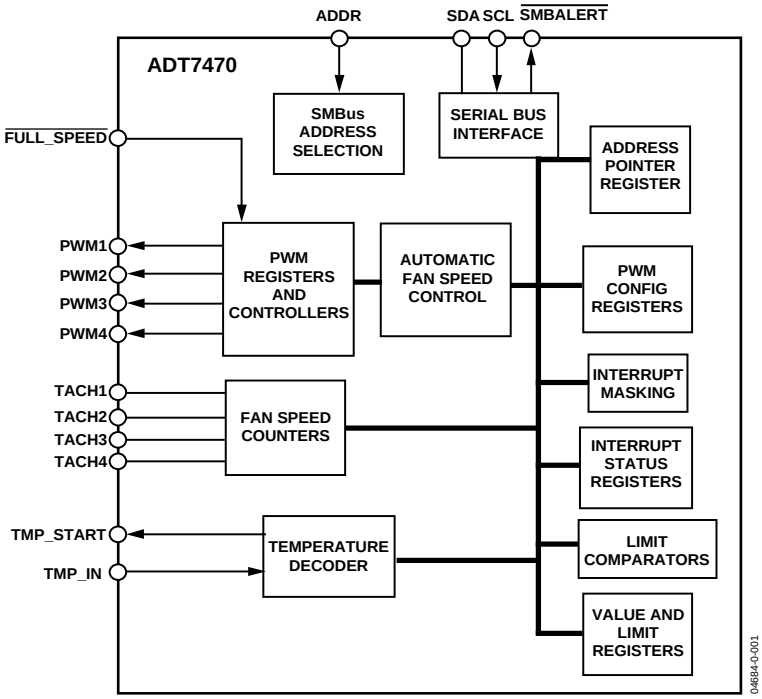

Figure1.

[1] Protected by Patent Numbers US6,169,442, US6,097,239, US5,982,221, US5,867,012. Other patents pending.

Rev. E **Document Feedback**

Information furnished by Analog Devices is believed to be accurate and reliable. However, no responsibility is assumed by Analog Devices for its use, nor for any infringements of patents or other rights of third parties that may result from its use. Specifications subject to change without notice. No license is granted by implication or otherwise under any patent or patent rights of Analog Devices. Trademarks and registered trademarks are the property of their respective owners.

One Technology Way, P.O. Box 9106, Norwood, MA 02062-9106, U.S.A.
Tel: 781.329.4700 **©2004–2013 Analog Devices, Inc. All rights reserved.**
Technical Support **www.analog.com**

TABLE OF CONTENTS

Features ... 1
Applications ... 1
General Description ... 1
Functional Block Diagram ... 1
Revision History ... 2
Specifications ... 3
  Serial Bus Timing Specifications ... 4
Absolute Maximum Ratings ... 5
  Thermal Characteristics ... 5
  ESD Caution ... 5
Pin Configuration and Function Descriptions ... 6
Functional Description ... 7
  General Description ... 7
  Configuration Register 1 (Address 0x40) ... 7
  Configuration Register 2 (Address 0x74) ... 7
  ID Registers ... 7
General-Purpose I/O Pins (Open Drain) ... 8
SMBus/I²C Serial Interface ... 9
  Address Selection ... 9
  Serial Bus Protocol ... 9
  Write Operations ... 11
  Read Operations ... 12
  SMBus Timeout ... 12
Temperature Measurement Using TMP05/TMP06 ... 13
  Measuring Temperature ... 13
  Temperature ReadBack By the Host ... 14
  Temperature Data Format ... 14
  Temperature Measurement Limits ... 15
  Thermal Zones for Automatic Fan Control ... 15
Limit and Status Registers ... 16
  Limit Values ... 16
  Temperature Limits ... 16
  Fan Speed Limits ... 16
  Out-of-Limit Comparisons ... 16
  Status Registers ... 17
  $\overline{\text{SMBALERT}}$ Interrupt ... 18
Fan Drive Using PWM Control ... 20
  High Frequency Fan Drive ... 20
  Low Frequency Fan Drive ... 20
  Setting the Fan Drive Frequency ... 21
  Inverted PWM Output ... 21
  Fan Full Speed Function ... 21
Fan Speed Measurement ... 22
  Tach Inputs ... 22
  Fan Speed Measurement ... 23
Manual Fan Speed Control ... 25
  Setting the PWM Duty Cycle ... 25
Automatic Fan Speed Control ... 26
Register Map ... 27
Detailed Register Descriptions ... 29
Outline Dimensions ... 39
  Ordering Guide ... 39

REVISION HISTORY

4/13—Rev. D to Rev. E

Changed Input Low Voltage, V_{IL} from 0.4 V to 1.0 V and Added Test Conditions/Comments; Table 1 ... 3

3/13—Rev. C to Rev. D

Changes to Calculating Fan Speed and Tachometer Limits Section ... 24
Changes to Bit 3, Table 43 ... 35
Updated Outline Dimensions ... 39

7/09—Rev. B to Rev. C

Changes to Functional Description Section ... 7
Added Temperature Data Format Section ... 14
Additions to Fan Drive Using PWM Control Section ... 20
Additions to Manual Fan Speed Control Section ... 25
Additions to Automatic Fan Speed Control Section ... 26

7/05—Rev. A to Rev. B

References to PWM_IN changed to TMP_IN ... Universal
Changes to T_{MIN} Registers Section ... 7
Added Address Selection Section ... 7
Added Thermal Zones Section ... 12
Added Temperature Reading Section ... 13
Added Note to Table 39 ... 32

2/05—Rev. 0 to Rev. A

Added General-Purpose I/O Pins (Open Drain) Section ... 11

11/04—Revision 0: Initial Version

SPECIFICATIONS

T_A = −40°C to +125°C, V_{CC} = 3.0 V to 5.5 V, unless otherwise noted.

Table 1.

Parameter[1, 2, 3, 4, 5]	Min	Typ	Max	Unit	Test Conditions/Comments
POWER SUPPLY[1]					
Supply Voltage	3.0	3.3	5.5	V	
Supply Current, I_{CC}		0.5	0.8	mA	
Standby Current, I_{CC}		4		µA	
FAN RPM-TO-DIGITAL CONVERTER					
Accuracy			±12	%	
Full-Scale Count			65,535		
Nominal Input RPM		109		RPM	Fan count = 0xBFFF
		329		RPM	Fan count = 0x3FFF
		5,000		RPM	Fan count = 0x0438
		10,000		RPM	Fan count = 0x021C
OPEN-DRAIN DIGITAL OUTPUTS, PWM1 to PWM4, $\overline{\text{SMBALERT}}$					
Output Low Voltage, V_{OL}			0.4	V	I_{OUT} = −8.0 mA, V_{CC} = +3.3 V
High Level Output Current, I_{OH}		0.1	1	µA	$V_{OUT} = V_{CC}$
OPEN-DRAIN SERIAL DATA BUS OUTPUT (SDA)					
Output Low Voltage, V_{OL}			0.4	V	I_{OUT} = −4.0 mA, V_{CC} = +3.3 V
High Level Output Current, I_{OH}		0.1	1	µA	$V_{OUT} = V_{CC}$
SMBus DIGITAL INPUTS (SCL, SDA)					
Input High Voltage, V_{IH}	2.4			V	
Input Low Voltage, V_{IL}			1.0	V	V_{CC} = 3.3 V
Hysteresis		500		mV	
DIGITAL INPUT LOGIC LEVELS (TACH INPUTS, $\overline{\text{FULL_SPEED}}$, GPIO)					
Input High Voltage, V_{IH}	2.4			V	
Input Low Voltage, V_{IL}			0.8	V	
Hysteresis		50		mV p-p	
DIGITAL INPUT LOGIC LEVELS (TMP_IN)					
Input High Voltage, V_{IH}	V_{DD} − 0.3			V	
Input Low Voltage, V_{IL}			0.4	V	
DIGITAL INPUT CURRENT					
Input High Current, I_{IH}	−5			µA	$V_{IN} = V_{CC}$
Input Low Current, I_{IL}			5	µA	V_{IN} = 0
Input Capacitance, C_{IN}		5		pF	

[1] V_{DD} should never be floated in the presence of SCL/SDA activity. Charge injection can be sufficient to induce approximately 0.6 V on V_{DD}.
[2] All voltages are measured with respect to GND, unless otherwise specified.
[3] Typical values are at %A = 25°C and represent the most likely parametric norm.
[4] Logic inputs accept input high voltages up to 5 V even when the device is operating at supply voltages below 5 V.
[5] Timing specifications are tested at logic levels of V_{IL} = 0.8 V for a falling edge and V_{IH} = 2.0 V for a rising edge.

SERIAL BUS TIMING SPECIFICATIONS

Table 2.

Parameter[1, 2, 3, 4, 5]	Min	Typ	Max	Unit	Test Conditions/Comments
SERIAL BUS TIMING					
Clock Frequency, f_{SCLK}			400	kHz	See Figure 2
Glitch Immunity, t_{SW}		50		ns	See Figure 2
Bus Free Time, t_{BUF}	1.3			µs	See Figure 2
Start Setup Time, $t_{SU;STA}$	600			ns	See Figure 2
Start Hold Time, $t_{HD;STA}$	600			ns	See Figure 2
SCL Low Time, t_{LOW}	1.3			µs	See Figure 2
SCL High Time, t_{HIGH}	0.6			µs	See Figure 2
SCL, SDA Rise Time, t_r			300	ns	See Figure 2
SCL, SDA Fall Time, t_f			300	ns	See Figure 2
Data Setup Time, $t_{SU;DAT}$	100			ns	See Figure 2
Detect Clock Low Timeout, $t_{TIMEOUT}$	25	28	31	ms	Can be optionally disabled, via Configuration Register 1 (see Table 6)

[1] VDD should never be floated in the presence of SCL/SDA activity. Charge injection can be sufficient to induce approximately 0.6 V on VDD.
[2] All voltages are measured with respect to GND, unless otherwise specified.
[3] Typical values are at %A = 25°C and represent the most likely parametric norm.
[4] Logic inputs accept input high voltages up to 5 V even when the device is operating at supply voltages below 5 V.
[5] Timing specifications are tested at logic levels of VIL = 0.8 V for a falling edge and VIH = 2.0 V for a rising edge.

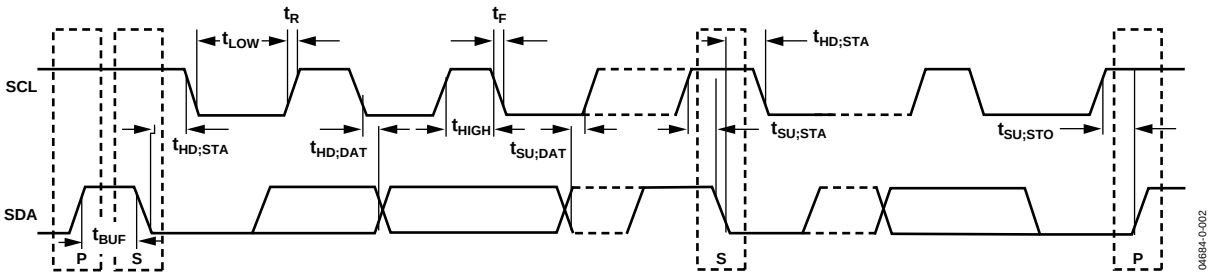

Figure 2. Serial Bus Timing Diagram

ABSOLUTE MAXIMUM RATINGS

Table 3.

Parameter	Rating
Positive Supply Voltage (V_{CC})	6.5 V
Voltage on Any TACH or PWM Pin	−0.3 V to +6.5 V
Voltage on Any Input or Output Pin	−0.3 V to V_{CC} + 0.3 V
Maximum Junction Temperature (T_J max)	150°C
Storage Temperature Range	−65°C to +150°C
Lead Temperature, Soldering	
Vapor Phase, 60 sec	215°C
Infrared, 15 sec	200°C
ESD Rating (HBM)	3000 V

THERMAL CHARACTERISTICS

16-Lead QSOP Package:
θ_{JA} = 105°C/W
θ_{JC} = 39°C/W

Stresses above those listed under Absolute Maximum Ratings may cause permanent damage to the device. This is a stress rating only; functional operation of the device at these or any other conditions above those indicated in the operational section of this specification is not implied. Exposure to absolute maximum rating conditions for extended periods may affect device reliability.

ESD CAUTION

ESD (electrostatic discharge) sensitive device. Charged devices and circuit boards can discharge without detection. Although this product features patented or proprietary protection circuitry, damage may occur on devices subjected to high energy ESD. Therefore, proper ESD precautions should be taken to avoid performance degradation or loss of functionality.

PIN CONFIGURATION AND FUNCTION DESCRIPTIONS

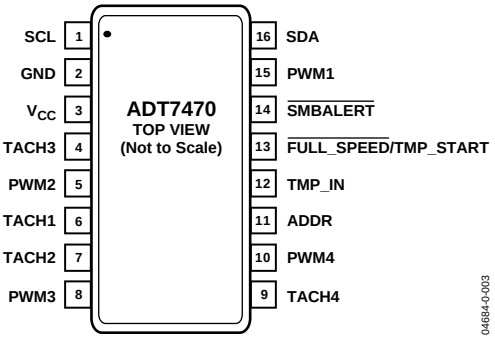

Figure3. Pin Configuration

Table 4. Pin Function Descriptions

Pin No.	Mnemonic	Description
1	SCL	Digital Input (Open Drain). SMBus serial clock input. Requires SMBus pull-up, typically 2k2Ω.
2	GND	Ground Pin.
3	V_{CC}	Power Supply Pin.
4	TACH3	Digital Input (Open Drain). Fan tachometer input to measure the speed of Fan 3.
5	PWM2	Digital I/O (Open Drain). Requires 10 kΩ typical pull-up. Pulse-width modulated output to control the speed of Fan 2. Can be configured as GPIO by setting Bit 0x7F[2] = 1.
6	TACH1	Digital Input (Open Drain). Fan tachometer input to measure the speed of Fan 1.
7	TACH2	Digital Input (Open Drain). Fan tachometer input to measure the speed of Fan 2.
8	PWM3	Digital I/O (Open Drain). Pulse-width modulated output to control the speed of Fan 3. Requires 10 kΩ typical pull-up. Can be configured as GPIO by setting Bit 0x7F[1] = 1.
9	TACH4	Digital Input (Open Drain). Fan tachometer input to measure the speed of Fan 4.
10	PWM4	Digital I/O (Open Drain). Pulse-width modulated output to control the speed of Fan 4. Requires 10 kΩ typical pull-up. Can be configured as GPIO by setting Bit 0x7F[0] = 1.
11	ADDR	Three-state Input. Used to set the SMBus device address.
12	TMP_IN	Digital Input (Open Drain). PWM input to PWM processing engine that interprets daisy-chained output from multiple TMP05 temperature sensors. Readings from individual TMP05 temperature sensors are available by reading the temperature reading registers over the SMBus.
13	$\overline{\text{FULL_SPEED}}$	Digital Input Active Low (Open Drain). This input blasts the fans to maximum speed when the pin is pulled low externally. Do not leave pin 13 open when not I use, tie to V_{CC}.
13	TMP_START	Digital Output (Open Drain). This pin can be used as an output to start daisy-chained temperature measurements from TMP05 or TMP06 temperature sensors. Requires 10 kΩ typical pull-up.
14	$\overline{\text{SMBALERT}}$	Digital Output Active Low (Open Drain). This pin can be reconfigured as an $\overline{\text{SMBALERT}}$ interrupt output to signal out-of-limit conditions such as fan failures.
15	PWM1	Digital I/O (Open Drain). Pulse-width modulated output to control the speed of Fan 1. Requires 10 kΩ typical pull-up. Can be configured as GPIO by setting Bit 0x7F[3] = 1.
16	SDA	Digital I/O (Open Drain). SMBus bidirectional serial data. Requires SMBus pull-up, typically 2k2Ω.

FUNCTIONAL DESCRIPTION

GENERAL DESCRIPTION

The ADT7470 is a multichannel, pulse-width modulation (PWM) fan controller and monitor for any system requiring monitoring and cooling. The device communicates with the system via a serial system management bus. The device has a single address line for address selection (Pin 11), a serial data line for reading and writing addresses and data (Pin 16), and an input line for the serial clock (Pin 1). All control and programming functions of the ADT7470 are performed over the serial bus, which supports both SMBus and fast I²C specifications. In addition, an $\overline{\text{SMBALERT}}$ interrupt output is provided to indicate out-of-limit conditions.

When the ADT7470 monitoring sequence is started, it cycles through each fan tach input to measure fan speed. Measured values from these inputs are stored in value registers. These can be read out over the serial bus, or they can be automatically compared with programmed limits stored in the limit registers. The results of out-of-limit comparisons are stored in the status registers, which can be read over the serial bus to flag out-of-limit conditions. If fan speeds drop below preset levels or a fan stalls, an interrupt is generated. Likewise, the ADT7470 can flag fan over speed conditions by using limits set in the fan tach maximum registers.

ADT7470 Monitoring Cycle

The monitoring cycle begins when a 1 is written to the start bit (Bit 0) of Configuration Register 1 (Register 0x40). Each fan tach input is monitored in turn, and, as each measurement is completed, the result is automatically stored in the appropriate value register. Multiple temperature channels can also be monitored by clocking in temperatures using the TMP_IN pin. The temperature measurement function is addressed in hardware and requires no software intervention. The monitoring cycle continues unless disabled by writing a 0 to Bit 7 of Configuration Register 1.

The rate of temperature measurement updates depends on the nominal conversion rate of the TMP05/TMP06 temperature sensor (approximately 120 ms) and on the number of TMP05s daisy-chained together. The total monitoring cycle time is the temperature conversion time multiplied by the number of temperature channels being monitored.

Fan tach measurements are taken in parallel and are not synchronized with the temperature measurements in any way

CONFIGURATION REGISTER 1 (ADDRESS 0X40)

This register contains the STRT bit, Bit 0, which begins the monitoring cycle on the ADT7470.

The SMBus timeout can be disabled , fast tach enabled, and the registers locked, by writing to this register.

Control of high or low frequency fan drive, and the configuration for Pin 13, can be accessed via this register.

See Table 31 for more details.

CONFIGURATION REGISTER 2 (ADDRESS 0X74)

Writing a 1 to Bit 0 in this register puts the ADT7470 in shutdown mode, which puts the part into a low current consumption mode.

The PWM frequency for each fan is controlled via this register.

Fan speed measurement can be disabled for each fan by writing to this register.

See Table 44 for more details.

ID REGISTERS

The ADT7470 has three read-only registers for identifying the part and silicon revision.

The device ID register is located at address 0x3D, and is set to 0x70.

The company ID register, located at address 0x3E, is set to 0x41.

The revision number register is at address 0x3F, and contains the revision number of the ADT7470 silicon.

GENERAL-PURPOSE I/O PINS (OPEN DRAIN)

The ADT7470 has four pins that can be configured as either general-purpose logic pins or as PWM outputs. Each GPIO pin has a corresponding enable, direction, polarity and status bit.

Pin	Function	Register Address and Bit
GPIO1	Enable	0x7F [3]
	Direction	0x80 [7]
	Polarity	0x80 [6]
	Status	0x81 [4]
GPIO2	Enable	0x7F [2]
	Direction	0x80 [5]
	Polarity	0x80 [4]
	Status	0x81 [5]
GPIO3	Enable	0x7F [1]
	Direction	0x80 [3]
	Polarity	0x80 [2]
	Status	0x81 [6]
GPIO4	Enable	0x7F [0]
	Direction	0x80 [1]
	Polarity	0x80 [0]
	Status	0x81 [7]

To enable the PWM output on the ADT7470 as GPIOs, the enable bits in Register 0x7F must be set to 1.

Setting a direction bit to 1 in the GPIO configuration register makes the corresponding GPIO pin an output. Clearing the direction bit to 0 makes it an input.

Setting a polarity bit to 1 makes the corresponding GPIO pin active high. Clearing the polarity bit to 0 makes it active low.

When a GPIO pin is configured as an input, the corresponding bit in the GPIO status register is read-only and is set when the input is asserted. When a GPIO pin is configured as an output, the corresponding bit in one of the GPIO status registers becomes read/write. Setting this bit asserts the GPIO output. Note that whether a GPIO pin is configured as an input or as an output, asserted can be high or low, depending on the setting of the polarity bit.

SMBUS/I²C SERIAL INTERFACE

Control of the ADT7470 is carried out using the serial system management bus (SMBus). This interface is fully compatible with SMBus 2.0 electrical specifications and meets 400 pF bus capacitance requirements. The device also supports fast I²C (400 kHz max). The ADT7470 is connected to the bus as a slave device under the control of a master controller or service processor.

ADDRESS SELECTION

The ADT7470 has a 7-bit serial bus address. When the device is powered up with Pin 11 (ADDR) high, the ADT7470 has an SMBus address of 010 1111 or 0x5E (left-justified). Because the address is 7 bits, it can be left- or right-justified; this determines whether the address reads as 0x5x or 0x2x. Pin 11 can be left floating or tied low for other addressing options, as shown in Table 5. See also Figure 4, Figure 5, and Figure 6.

Table 5. ADT7470 Address Select Mode

Pin 11 (ADDR) State	Address
High (10 kΩ to V_{CC})	010 1111 (0x5E left-justified or 0x2F right-justified)
Low (10 kΩ to GND)	010 1100 (0x58 left-justified or 0x2C right-justified)
Floating (no pull-up)	010 1110 (0x5C left-justified or 0x2E right-justified)

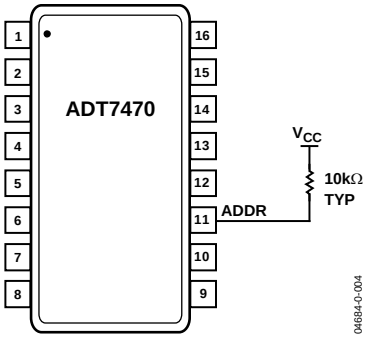

Figure 4. SMBus Address = 0x5E or 0x2F (Pin 11 = 1)

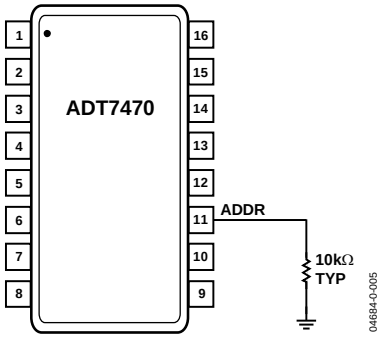

Figure 5. SMBus Address = 0x58 or 0x2C (Pin 11 = 0)

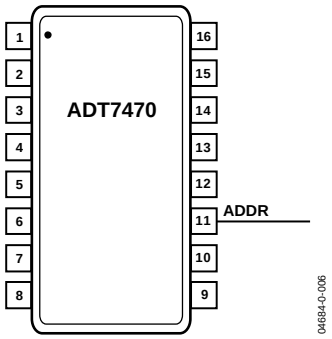

Figure 6. SMBus Address = 0x5C or 0x2E (Pin 11 = Floating)

The device address is sampled and latched on the first valid SMBus transaction, so any additional attempted addressing changes have no immediate effect. The facility to make hardwired changes to the SMBus slave address allows the user to avoid conflicts with other devices sharing the same serial bus, for example, if more than one ADT7470 is used in a system.

SERIAL BUS PROTOCOL

The serial bus protocol operates as follows:

1. The master initiates data transfer by establishing a start condition, defined as a high-to-low transition on the serial data line, SDA, while the serial clock line, SCL, remains high. This indicates that an address/data stream follows. All slave peripherals connected to the serial bus respond to the start condition, and shift in the next 8 bits, consisting of a 7-bit address (MSB first) and an R/$\overline{W}$ bit. This determines the direction of the data transfer, that is, whether data is written to or read from the slave device.

   The peripheral whose address corresponds to the transmitted address responds by pulling the data line low during the low period before the 9th clock pulse, known as the acknowledge bit. All other devices on the bus now remain idle while the selected device waits for data to be read from or written to it. If the R/$\overline{W}$ bit is 0, the master writes to the slave device. If the R/$\overline{W}$ bit is 1, the master reads from the slave device.

2. Data is sent over the serial bus in sequences of 9 clock pulses: 8 bits of data followed by an acknowledge bit from the slave device. Transitions on the data line must occur during the low period of the clock signal and remain stable during the high period. This is because a low-to-high transition when the clock is high might be interpreted as a stop signal. The number of data bytes that can be transmitted over the serial bus in a single read or write operation is limited only by what the master and slave devices can handle.

3. After all data bytes are read or written, stop conditions are established. In write mode, the master pulls the data line high during the 10th clock pulse to assert a stop condition. In read mode, the master device overrides the acknowledge bit by pulling the data line high during the low period before the 9th clock pulse. This is known as No Acknowledge. The master then takes the data line low

during the low period before the 10th clock pulse, then high during the 10th clock pulse to assert a stop condition.

Any number of bytes of data can be transferred over the serial bus in one operation. However, it is not possible to mix read and write in one operation, because the type of operation is determined at the beginning and subsequently cannot be changed without starting a new operation.

In the ADT7470, write operations contain either one or two bytes, and read operations contain one byte and perform the following functions.

To write data to one of the device data registers or read data from it, the address pointer register must be set so that the correct data register is addressed. Then data can be written into that register or read from it. The first byte of a write operation always contains an address that is stored in the address pointer register. If data is to be written to the device, the write operation contains a second data byte that is written to the register selected by the address pointer register.

This is illustrated in Figure 7. The device address is sent over the bus followed by R/$\overline{W}$ set to 0. This is followed by two data bytes.

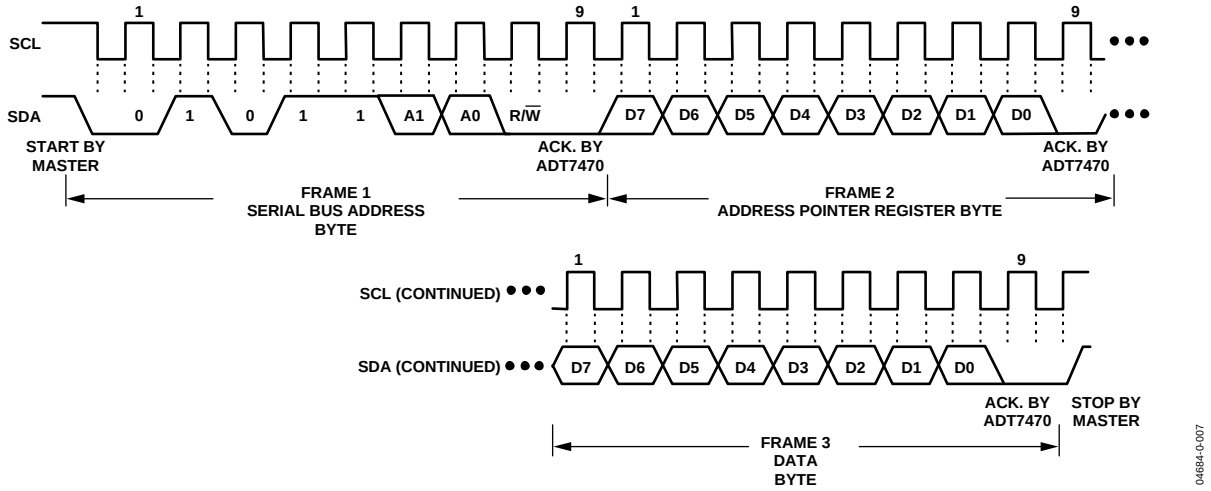

Figure 7. Writing a Register Address to the Address Pointer Register, Then Writing Data to the Selected Register

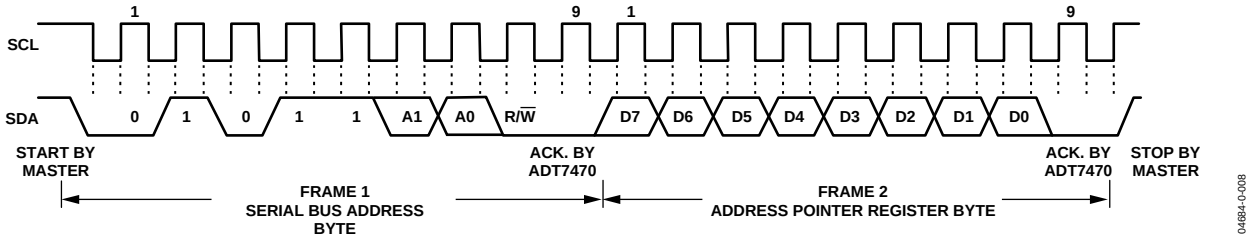

Figure 8. Writing to the Address Pointer Register Only

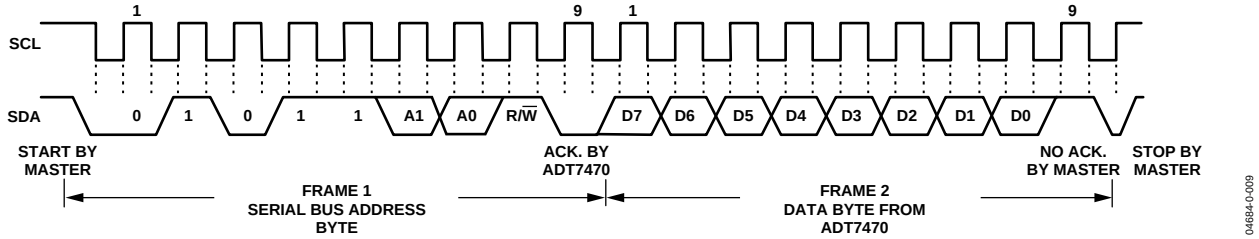

Figure 9. Reading Data from a Previously Selected Register

The first data byte is the address of the internal data register to be written to, which is stored in the address pointer register. The second data byte is the data to be written to the internal data register.

How data is read from a register depends on whether or not the address pointer register value is known.

If the ADT7470 address pointer register value is unknown or not the desired value, it is first necessary to set it to the correct value before data can be read from the desired data register. This is done by performing a write to the ADT7470 as before, but only the data byte containing the register address is sent, because data cannot be written to the register. This is shown in Figure 8.

A read operation is then performed consisting of the serial bus address, R/$\overline{W}$ bit set to 1, followed by the data byte read from the data register. This is shown in Figure 9.

If the address pointer register is known to be already at the desired address, data can be read from the corresponding data register without first writing to the address pointer register, so the operation shown in Figure 8 can be omitted.

Note the following:

- Although it is possible to read a data byte from a data register without first writing to the address pointer register if the address pointer register is already at the correct value, it is not possible to write data to a register without writing to the address pointer register. This is because the first data byte of a write is always written to the address pointer register.
- In Figure 7 to Figure 9, the serial bus address is shown as the default value 01011(A1)(A0), where A1 and A0 are set by the address select mode function previously defined.
- In addition to supporting the send byte and receive byte protocols, the ADT7470 also supports the read byte protocol. See System Management Bus Specifications Rev. 2.0 for more information.
- If it is required to perform several read or write operations in succession, the master can send a repeat start condition instead of a stop condition to begin a new operation.

WRITE OPERATIONS

The SMBus specification defines several protocols for different types of read and write operations. The protocols used in the ADT7470 are discussed in the following sections. The following abbreviations are used in the diagrams:

S—Start
P—Stop
R—Read
W—Write
A—Acknowledge
$\overline{A}$—No Acknowledge

The ADT7470 uses the following SMBus write protocols.

Send Byte

In this protocol, the master device sends a single command byte to a slave device, as follows:

1. The master device asserts a start condition on SDA.
2. The master sends the 7-bit slave address followed by the write bit (low).
3. The addressed slave device asserts ACK on SDA.
4. The master sends a command code.
5. The slave asserts ACK on SDA.
6. The master asserts a stop condition on SDA, and the transaction ends.

For the ADT7470, the send byte protocol is used to write a register address to RAM for a subsequent single byte read from the same address. This is shown in Figure 10.

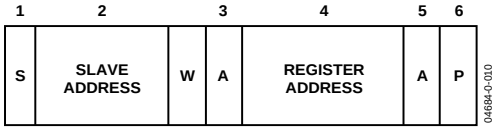

Figure 10. Setting a Register Address for Subsequent Read

If it is required to read data from the register immediately after setting up the address, the master can assert a repeat start condition immediately after the final ACK and carry out a single-byte read without asserting an intermediate stop condition.

Write Byte

In this operation, the master device sends a command byte and one data byte to the slave device, as follows:

1. The master device asserts a start condition on SDA.
2. The master sends the 7-bit slave address followed by the write bit (low).
3. The addressed slave device asserts ACK on SDA.
4. The master sends a command code.
5. The slave asserts ACK on SDA.
6. The master sends a data byte.
7. The slave asserts ACK on SDA.
8. The master asserts a stop condition on SDA to end the transaction.

This is shown in Figure 11.

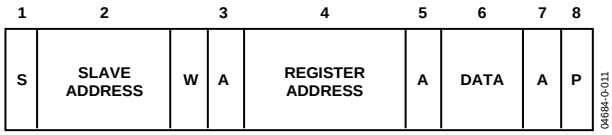

Figure 11. Single-Byte Write to a Register

READ OPERATIONS

The ADT7470 uses the following SMBus read protocols.

Receive Byte

This is useful when repeatedly reading a single register. The register address must be set up previously. In this operation, the master device receives a single byte from a slave device, as follows:

1. The master device asserts a start condition on SDA.
2. The master sends the 7-bit slave address followed by the read bit (high).
3. The addressed slave device asserts ACK on SDA.
4. The master receives a data byte.
5. The master asserts NO ACK on SDA.
6. The master asserts a stop condition on SDA and the transaction ends.

In the ADT7470, the receive byte protocol is used to read a single byte of data from a register whose address was previously set by a send byte or write byte operation.

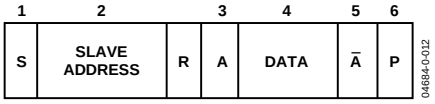

Figure 12. Single Byte Write from a Register

Alert Response Address

Alert response address (ARA) is a feature of SMBus devices, which allows an interrupting device to identify itself to the host when multiple devices exist on the same bus.

The $\overline{\text{SMBALERT}}$ output can be used as an interrupt output or can be used as an $\overline{\text{SMBALERT}}$. One or more outputs can be connected to a common $\overline{\text{SMBALERT}}$ line connected to the master. If a device's $\overline{\text{SMBALERT}}$ line goes low, the following occurs:

1. $\overline{\text{SMBALERT}}$ is pulled low.
2. The master initiates a read operation and sends the alert response address (ARA = 000 1100). This is a general call address that must not be used as a specific device address.
3. The device whose $\overline{\text{SMBALERT}}$ output is low responds to the alert response address, and the master reads its device address. The address of the device is now known, and it can be interrogated in the usual way.
4. If more than one device's $\overline{\text{SMBALERT}}$ output is low, the one with the lowest device address has priority, in accordance with normal SMBus arbitration.
5. Once the ADT7470 responds to the alert response address, the master must read the status registers, and the $\overline{\text{SMBALERT}}$ is cleared only if the error condition is gone.

SMBus TIMEOUT

The ADT7470 includes an SMBus timeout feature. If there is no SMBus activity for more than 31 ms, the ADT7470 assumes that the bus is locked and releases the bus. This prevents the device from locking or holding the SMBus expecting data. Some SMBus controllers cannot handle the SMBus timeout feature, so it can be disabled.

Table 6. Configuration Register 1—Register 0x40

Bit Address and Value	Description
Bit 3 TODIS = 0	SMBus timeout enabled (default).
Bit 3 TODIS = 1	SMBus timeout disabled.

Although the ADT7470 supports packet error checking (PEC), its use is optional. It is triggered by supplying the extra clock for the PEC byte. The PEC byte is calculated using CRC-8. The frame check sequence (FCS) conforms to CRC-8 by the following polynomial:

$$C(x) = x^8 + x^2 + x^1 + 1$$

Consult the SMBus 1.1 Specification for more information by searching online.

TEMPERATURE MEASUREMENT USING TMP05/TMP06

MEASURING TEMPERATURE

The ADT7470 can be connected with up to 10 daisy-chained TMP05/TMP06 devices for temperature measurement. Each TMP05/TMP06 performs an ambient temperature measurement, and outputs a PWM signal. The ADT7470 decodes the PWM into a temperature measurement, and stores the result in the temperature reading registers, listed in Table 7.The maximum temperature read back from all TMP05 temperature readings is stored in register 0x78.

To use the ADT7470 with TMP05/TMP06, the parts should be connected as shown in Figure 13. Pin 13 on the ADT7470 should be configured as TMP_START, by setting Configuration Register 1 Bit 7 to Bit 1. (Register address 0x40 Bit[7] =1). The start pulse required by the TMP05/06 will be output on the TMP_START pin. The OUT pin on the last TMP05/06 in the daisy-chain should be connected to Pin 12 on the ADT7470, TMP_IN. For more information on the TMP05/06, refer to the TMP05/TMP06 data sheet.

Reporting of 8-bit temperature values occurs only if the TMP_IN function is used and if TMP05/TMP06s are daisy-chained according to their data sheet and connected as shown. The ADT7470 does not have any temperature measurement capability when used as a standalone device without TMP05s and TMP06s connected.

Table 7. Temperature Reading Registers

Register	Reading	Default
0x20	Temperature 1 reading	0x00
0x21	Temperature 2 reading	0x00
0x22	Temperature 3 reading	0x00
0x23	Temperature 4 reading	0x00
0x24	Temperature 5 reading	0x00
0x25	Temperature 6 reading	0x00
0x26	Temperature 7 reading	0x00
0x27	Temperature 8 reading	0x00
0x28	Temperature 9 reading	0x00
0x29	Temperature 10 reading	0x00
0x78	Max TMP05 temperature	0x00

TMP05/TMP06 Decoder

The ADT7470 includes a PWM processing engine to decode the daisy-chained PWM output from multiple TMP05s and TMP06s. It then passes each decoded temperature value to the temperature value registers. This allows the ADT7470 to do high/low limit comparisons of temperature and to automatically control fan speed based on measured temperature. The PWM processing engine contains all necessary logic to initiate start conversions on the first daisy-chained TMP05/TMP06 and to synchronize with each temperature value as it is fed back to the device through the daisy chain. The start function is multiplexed onto the same pin that can be used to blast the fans to full speed. The start conversion for TMP05/TMP06 temperature measurement is fully transparent to the user and does not require any software intervention to function.

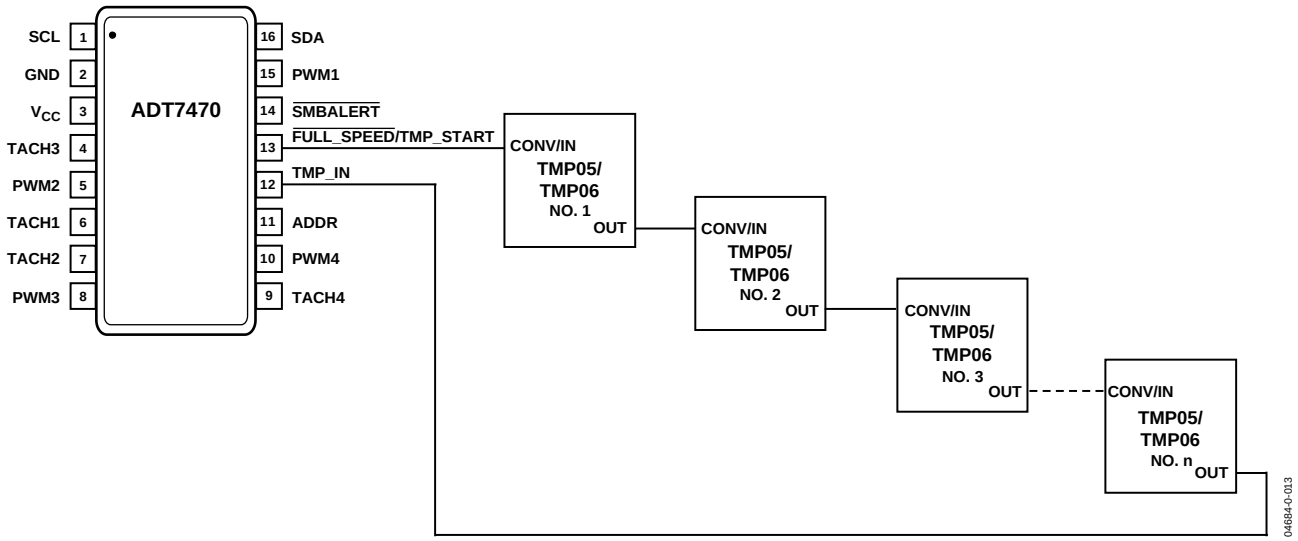

Figure 13. Interfacing the ADT7470 to Multiple Daisy-Chained TMP05/TMP06 Temperature Sensors

TEMPERATURE READBACK BY THE HOST

The user cannot read the ADT7470 temperature register values if the ADT7470 is in the process of a temperature measurement. The user must wait until the data from all the TMP05s and TMP06s in the chain are received by the ADT7470 before reading these values. Otherwise, the temperature registers may store an incorrect value. It is recommended to wait at least 200 ms for each TMP05 and TMP06 in the chain. The recommended procedure is as follows:

1. Set Register 40 Bit[7] = 1. This starts the temperature measurements.
2. Wait 200 ms for each TMP05/TMP06 in the loop.
3. Set Register 40 Bit[7] = 0.
4. Read the temperature registers.

TEMPERATURE DATA FORMAT

Temperature data on the ADT7470 is stored in an 8-bit format, with the 7 LSBs being the temperature, and the MSB acting as the sign bit. Use the following formulae when reading back from the temperature registers, o calculate the temperature:

Positive Temperature = ADC Code (decimal)

Negative Temperature = ADC (decimal) minus 256

For negative temperature readings, the MSB is always set to 1.

Example:

1. Temperature read back from register 0x20: 0xFF.
2. Convert into decimal format. 0xFF = 255 (decimal).
3. Check if MSB is set to 1. It is in this example. Therefore, use negative temperature formula, ADC (d) minus 256.
4. Temperature = 255 − 256 = −1°C.

Table 8. Temperature Data Format

Temperature (°C)	Digital Output (8 Bit)
−128	1000 0000
−125	1000 0011
−100	1001 1100
−75	1011 0101
−50	1100 1110
−25	1110 0111
−10	1111 0110
+0	0000 0000
+10	0000 1010
+25	0001 1001
+50	0011 0010
+75	0100 1011
+100	0110 0100
+125	0111 1101
+175	0111 1111

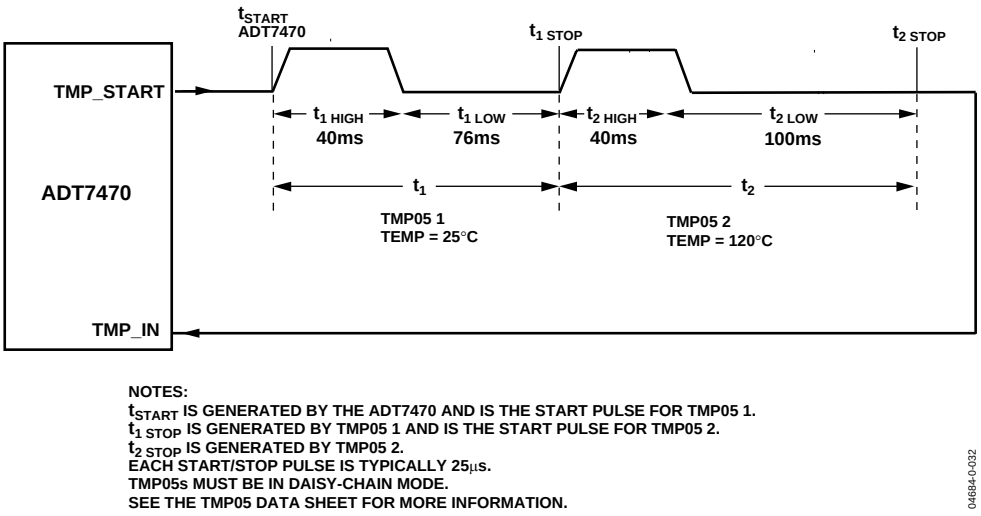

Figure 14. Typical Timing Diagram of ADT7470 with TMP05s Connected in Daisy-Chain Mode

TEMPERATURE MEASUREMENT LIMITS

High and low temperature limits can be individually set for each of the TMP05/06s that the ADT7470 is monitoring. The temperature limit registers are at address 0x44 to 0x57. The power-on default value for all TMP05/06 lower limits is −127°C (0x81). The power –on default value for all TMP05/06 upper limits is +127°C (0x7F). See Table 9 for details on the temperature limit registers.

If the temperature measured from a TMP05/06 exceeds the upper or lower limit, then a status bit in the Interrupt Status registers will be set to 1. See Table 12 and Table 13 for more details on the temperature status bits.

$\overline{\text{SMBALERT}}$ will assert is any temperature exceeds either the upper or lower limits. The temperature measurements can be masked as interrupt sources for $\overline{\text{SMBALERT}}$ using the interrupt mask registers, 0x72 and 0x73. See Table 14 and Table 15 for more details on the interrupt mask registers.

THERMAL ZONES FOR AUTOMATIC FAN CONTROL

The ADT7470 can control up to four independent thermal zones with individual fans. The user can configure which TMP05 controls which fan via register 0x7C and 0x7D.For each of the four thermal zones, an individual TMP05, or the hottest TMP05 in the daisy chain, can control the fan. In a system with n TMP05s, it is possible to have 1 or n TMP05s controlling each fan.

Thermal Zone T_{MIN}

For each of the four thermal zones, the user can configure the minimum temperature at which the fans run. Registers 0x6E to 0x71 should be configured with the minimum temperature for each thermal zone. When the temperature exceeds T_{MIN} for that thermal zone, the fans run at minimum speed (PWM_{MIN}). The fan speed increases to maximum speed (PWM_{MAX}) at [T_{MIN} + 20°C]. Fan on/off hysteresis is set at 4°C so that the fans turn off 4°C below the temperature at which they turn on. This prevents fan chatter in the system.

LIMIT AND STATUS REGISTERS

LIMIT VALUES

Associated with each measurement channel on the ADT7470 are high and low limits. These can form the basis of system status monitoring; a status bit can be set for any out-of-limit condition and be detected by polling the device. Alternatively, $\overline{\text{SMBALERT}}$ interrupts can be generated to automatically flag a service processor or microcontroller for out-of-limit conditions as they occur.

TEMPERATURE LIMITS

Table 9 lists the 8-bit temperature limits on the ADT7470.

Table 9. Temperature Limit Registers (8-Bit Limits)

Register Address	Description	Default
0x44	Temperature 1 Low Limit	0x81
0x45	Temperature 1 High Limit	0x7F
0x46	Temperature 2 Low Limit	0x81
0x47	Temperature 2 High Limit	0x7F
0x48	Temperature 3 Low Limit	0x81
0x49	Temperature 3 High Limit	0x7F
0x4A	Temperature 4 Low Limit	0x81
0x4B	Temperature 4 High Limit	0x7F
0x4C	Temperature 5 Low Limit	0x81
0x4D	Temperature 5 High Limit	0x7F
0x4E	Temperature 6 Low Limit	0x81
0x4F	Temperature 6 High Limit	0x7F
0x50	Temperature 7 Low Limit	0x81
0x51	Temperature 7 High Limit	0x7F
0x52	Temperature 8 Low Limit	0x81
0x53	Temperature 8 High Limit	0x7F
0x54	Temperature 9 Low Limit	0x81
0x55	Temperature 9 High Limit	0x7F
0x56	Temperature 10 Low Limit	0x81
0x57	Temperature 10 High Limit	0x7F

FAN SPEED LIMITS

The fan tach measurements are 16-bit results. The fan tach limits are also 16 bits, consisting of two bytes: a high byte and low byte. On the ADT7470 it is possible to set both high and low speed fan limits for over speed and under speed or stall conditions. Be aware that, because the fan tach period is actually being measured, exceeding the limit by 1 indicates a slow or stalled fan. Likewise, exceeding the high speed limit by 1 generates an over speed condition.

Table 10. Fan Underspeed Limit Registers

Register Address	Description	Default
0x58	Tach 1 Min Low Byte	0xFF
0x59	Tach 1 Min High Byte	0xFF
0x5A	Tach 2 Min Low Byte	0xFF
0x5B	Tach 2 Min High Byte	0xFF
0x5C	Tach 3 Min Low Byte	0xFF
0x5D	Tach 3 Min High Byte	0xFF
0x5E	Tach 4 Min Low Byte	0xFF
0x5F	Tach 4 Min High Byte	0xFF

Table 11. Fan Overspeed Limit Registers

Register Address	Description	Default
0x60	Tach 1 Max Low Byte	0x00
0x61	Tach 1 Max High Byte	0x00
0x62	Tach 2 Max Low Byte	0x00
0x63	Tach 2 Max High Byte	0x00
0x64	Tach 3 Max Low Byte	0x00
0x65	Tach 3 Max High Byte	0x00
0x66	Tach 4 Max Low Byte	0x00
0x67	Tach 4 Max High Byte	0x00

OUT-OF-LIMIT COMPARISONS

Once all limits are programmed, the ADT7470 can be enabled to begin monitoring. The ADT7470 measures all parameters in round-robin format and sets the appropriate status bit for out-of-limit conditions.

Comparisons are done differently depending on whether the measured value is compared to a high limit or a low limit.

High Limit: > Comparison Performed

Low Limit: ≤ Comparison Performed

STATUS REGISTERS

The results of limit comparisons are stored in Status Register 1 and Status Register 2. The status register bit for each channel reflects the status of the last measurement and limit comparison on that channel. If a measurement is within limits, the corresponding status register bit is cleared to 0. If the measurement is out of limit, the corresponding status register bit is set to 1.

The state of the various measurement channels can be polled by reading the status registers over the serial bus. When Bit 7 (OOL) of Status Register 1 (Register 0x41) is a 1, an out-of-limit event has been flagged in Status Register 2. This means that Status Register 2 must be read only when the OOL bit is set.

Reading the status registers clears the appropriate status bit as long as the error condition that caused the interrupt has cleared. Status register bits are sticky. Whenever a status bit is set, indicating an out-of-limit condition, it remains set even if the event that caused it has gone away (until read). The only way to clear the status bit is to read the status register when the event has gone away.

Interrupt status mask registers (Register 0x72 and Register 0x73) allow individual interrupt sources to be masked from causing an $\overline{\text{SMBALERT}}$. However, if one of these masked interrupt sources goes out of limit, its associated status bit is still set in the interrupt status registers. This allows the device to be periodically polled to determine if an error condition has subsided, without unnecessarily tying up precious system resources handling interrupt service routines. The issue is that the device could potentially interrupt the system every monitoring cycle (< 1 sec) as long as a measurement parameter remains out of limit. Masking eliminates unwanted system interrupts.

The OOL bit (Register 0x41 Bit[7]), and the NORM bit (Register 0x42 Bit[3]) do not activate $\overline{\text{SMBALERT}}$.

Table 12. Interrupt Status Register 1 (Register 0x41)

Bit No.	Mnemonic	Description
7	OOL	A 1 denotes that a bit in Status Register 2 is set and Status Register 2 should now be read.
6	R7T	A 1 indicates that TMP05 Temperature 7 high or low limit has been exceeded.
5	R6T	A 1 indicates that TMP05 Temperature 6 high or low limit has been exceeded.
4	R5T	A 1 indicates that TMP05 Temperature 5 high or low limit has been exceeded.
3	R4T	A 1 indicates that TMP05 Temperature 4 high or low limit has been exceeded.
2	R3T	A 1 indicates that TMP05 Temperature 3 high or low limit has been exceeded.
1	R2T	A 1 indicates that TMP05 Temperature 2 high or low limit has been exceeded.
0	R1T	A 1 indicates that TMP05 Temperature 1 high or low limit has been exceeded.

Table 13. Interrupt Status Register 2 (Register 0x42)

Bit No.	Mnemonic	Description
7	Fan 4	A 1 indicates that Fan 4 has dropped below minimum speed or is above maximum speed.
6	Fan 3	A 1 indicates that Fan 3 has dropped below minimum speed or is above maximum speed.
5	Fan 2	A 1 indicates that Fan 2 has dropped below minimum speed or is above maximum speed.
4	Fan 1	A 1 indicates that Fan 1 has dropped below minimum speed or is above maximum speed.
3	NORM	A 1 indicates that the temperatures are below T_{MIN} and that the fans are supposed to be off.
2	R10T	A 1 indicates that TMP05 Temperature 10 high or low limit has been exceeded.
1	R9T	A 1 indicates that TMP05 Temperature 9 high or low limit has been exceeded.
0	R8T	A 1 indicates that TMP05 Temperature 8 high or low limit has been exceeded.

SMBALERT INTERRUPT

The ADT7470 can be polled for status, or an SMBALERT interrupt can be generated for out-of-limit conditions. Note how the SMBALERT output and status bits behave when writing interrupt handler software.

Figure 15 shows how the SMBALERT output and sticky status bits behave. Once a limit is exceeded, the corresponding status bit is set to 1. The status bit remains set until the error condition subsides the status register is read. The status bits are referred to as sticky because they remain set until read by software. This ensures that an out-of-limit event cannot be missed if software is polling the device periodically. The SMBALERT output remains low for the duration that a reading is out of limit until the status register is read. This has implications for how software handles the interrupt.

Handling SMBALERT Interrupts

To prevent the system from being tied up servicing interrupts, handle the SMBALERT interrupt as follows:

1. Detect the SMBALERT assertion.
2. Enter the interrupt handler.
3. Read the status registers to identify the interrupt source.
4. Mask the interrupt source by setting the appropriate mask bit in the interrupt mask registers (Register 0x72 and Register 0x73).
5. Take the appropriate action for a given interrupt source.
6. Exit the interrupt handler.
7. Periodically poll the status registers. If the interrupt status bit is cleared, reset the corresponding interrupt mask bit to 0. This causes the SMBALERT output and status bits to behave as shown in Figure 16.

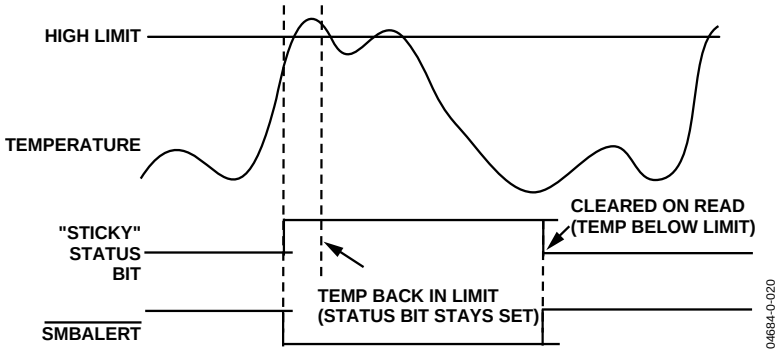

Figure 15. SMBALERT and Status Bit Behavior

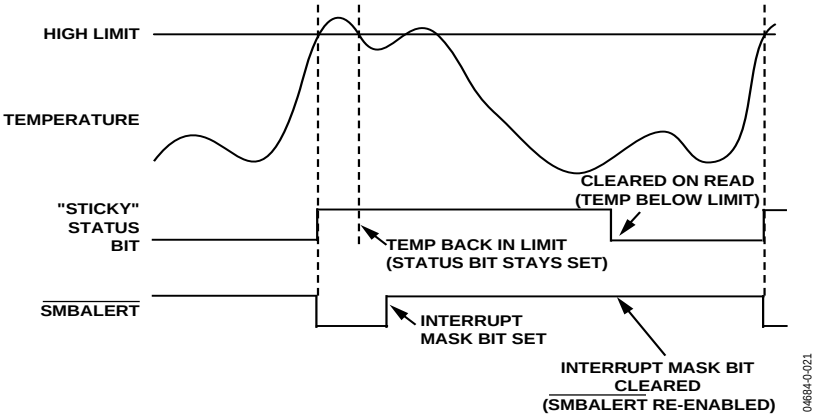

Figure 16. How Masking the Interrupt Source Affects SMBALERT Output

Masking Interrupt Sources

Interrupt Mask Register 1 and Interrupt Mask Register 2 are located at Address 0x72 and Address 0x73. These allow individual interrupt sources to be masked out to prevent unwanted $\overline{\text{SMBALERT}}$ interrupts. Masking an interrupt source prevents only the $\overline{\text{SMBALERT}}$ output from being asserted; the appropriate status bit is still set as usual. This is useful if the system polls the monitoring devices periodically to determine whether or not out-of-limit conditions have subsided, without tying up time-critical system resources.

Enabling the $\overline{\text{SMBALERT}}$ Interrupt Output

The $\overline{\text{SMBALERT}}$ interrupt output is a dedicated function provided on Pin 14 to signal out-of-limit conditions to a host or system processor. Because this is a dedicated function, it is important that limit registers be programmed before monitoring is enabled to prevent spurious interrupts from occurring on the $\overline{\text{SMBALERT}}$ pin. Although the $\overline{\text{SMBALERT}}$ output cannot be specifically disabled, interrupt sources can be masked to prevent $\overline{\text{SMBALERT}}$ assertions. Monitoring is enabled when Bit 0 (STRT) of Configuration Register 1 (Register 0x40) is set to 1.

Table 14. Interrupt Mask Register 1 (Register 0x72)

Bit No.	Mnemonic	Description
7	Unused	Unused.
6	R7T	A 1 masks the $\overline{\text{SMBALERT}}$ for TMP05 Temperature 7.
5	R6T	A 1 masks the $\overline{\text{SMBALERT}}$ for TMP05 Temperature 6.
4	R5T	A 1 masks the $\overline{\text{SMBALERT}}$ for TMP05 Temperature 5.
3	R4T	A 1 masks the $\overline{\text{SMBALERT}}$ for TMP05 Temperature 4.
2	R3T	A 1 masks the $\overline{\text{SMBALERT}}$ for TMP05 Temperature 3.
1	R2T	A 1 masks the $\overline{\text{SMBALERT}}$ for TMP05 Temperature 2.
0	R1T	A 1 masks the $\overline{\text{SMBALERT}}$ for TMP05 Temperature 1.

Table 15. Interrupt Mask Register 2 (Register 0x73)

Bit No.	Mnemonic	Description
7	Fan 4	A 1 masks the $\overline{\text{SMBALERT}}$ for Fan 4 overspeed/underspeed conditions.
6	Fan 3	A 1 masks the $\overline{\text{SMBALERT}}$ for Fan 3 overspeed/underspeed conditions.
5	Fan 2	A 1 masks the $\overline{\text{SMBALERT}}$ for Fan 2 overspeed/underspeed conditions.
4	Fan 1	A 1 masks the $\overline{\text{SMBALERT}}$ for Fan 1 overspeed/underspeed conditions.
3	Unused	Unused.
2	R10T	A 1 masks the $\overline{\text{SMBALERT}}$ for TMP05 Temperature 10.
1	R9T	A 1 masks the $\overline{\text{SMBALERT}}$ for TMP05 Temperature 9.
0	R8T	A 1 masks the $\overline{\text{SMBALERT}}$ for TMP05 Temperature 8.

FAN DRIVE USING PWM CONTROL

The ADT7470 uses pulse-width modulation (PWM) to control fan speed. This relies on varying the duty cycle (or on/off ratio) of a square wave applied to the fan to vary the fan speed. Two main control schemes are used: low frequency and high frequency PWM.

Configuration Register 1 Bit[6], at address 0x40, configures the fan drive for high or low frequency operation. If this bit is set to 0, which is the default, high frequency fan drive is selected. If this bit is set to 1, low frequency fan drive is selected. All four PWM outputs on the ADT7470 have the same drive frequency.

HIGH FREQUENCY FAN DRIVE

One of the important features of fan controllers is the PWM drive frequency. Most fans are driven asynchronously at low frequency (30 Hz to 100 Hz). Increasingly, the devices drive fans at greater than 20 kHz. These controllers are meant to drive 4-wire fans with PWM control built-in internal to the fan in Figure 17. The ADT7470 supports high frequency PWM (great than 20 kHz), as well as 1.4 kHz and other low frequency PWM. This allows the user to drive 3-wire or 4-wire fans.

If using 3-wire fans this mode, care should be taken to ensure that incomplete tach information does not occur at low PWM duty cycles, or short PWM pulse widths.

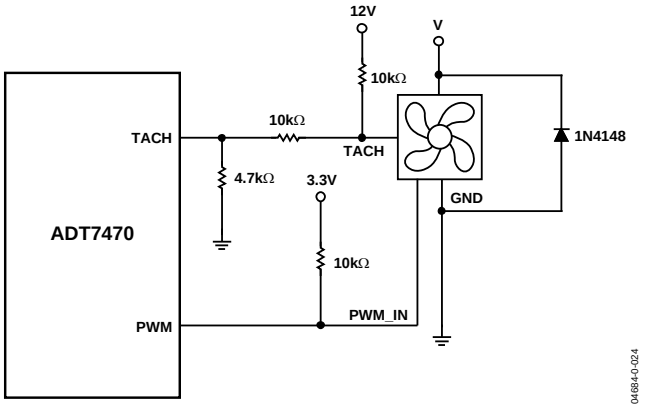

Figure 17. Driving a 4-Wire Fan

LOW FREQUENCY FAN DRIVE

For low frequency, low-side drive, the external circuitry required to drive a fan using PWM control is extremely simple. A single NMOS FET is the only drive device required. The specifications of the MOSFET depend on the maximum current required by the fan being driven. Typical notebook fans draw a nominal 170 mA; therefore, SOT devices can be used where board space is a concern. In desktops, fans can typically draw 250 mA to 300 mA each. If the user needs to drive several fans in parallel from a single PWM output or drive larger server fans, the MOSFET needs to handle the higher current requirements. The only other stipulation is that the MOSFET should have a gate voltage drive, VGS, less than 3.3 V, for direct interfacing to the PWM pin of the ADT7470. VGS of the chosen MOSFET can be greater than 3.3 V as long as the pull-up on its gate is tied to 5 V.

The MOSFET should also have a low on resistance to ensure that there is not significant voltage drop across the FET. This would reduce the voltage applied across the fan and, therefore, the maximum operating speed of the fan.

Figure 18 shows how a 3-wire fan can be driven using low frequency PWM control where the control method is low-side, low frequency switching.

Figure 18 shows the ideal interface when interfacing a tach signal from a 12 V fan (or greater voltage) to a 5 V (or less) logic device. In all cases, the tach signal from the fan must be kept below 5 V maximum to prevent damage to the ADT7470. The three resistors in Figure 18 ensure that the tach voltage is kept within safe levels for typical desktop and notebook systems.

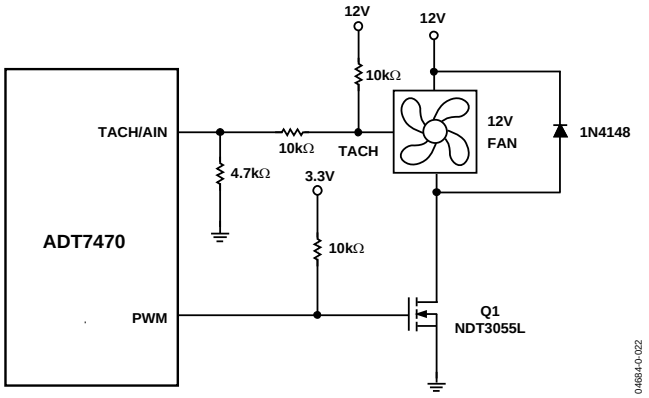

Figure 18. Driving a 3-Wire Fan Using an N-Channel MOSFET

Figure 19 shows a fan drive circuit using an NPN transistor such as a general-purpose MMBT2222. While these devices are inexpensive, they tend to have much lower current handling capabilities and higher on resistance than MOSFETs. When choosing a transistor, care should be taken to ensure that it meets the fan's current requirements. This is the only major difference between a MOSFET and NPN transistor fan driver circuit.

When using transistors, ensure that the base resistor is chosen such that the transistor is fully saturated when the fan is powered on. Otherwise, there are power inefficiencies in the implementation.

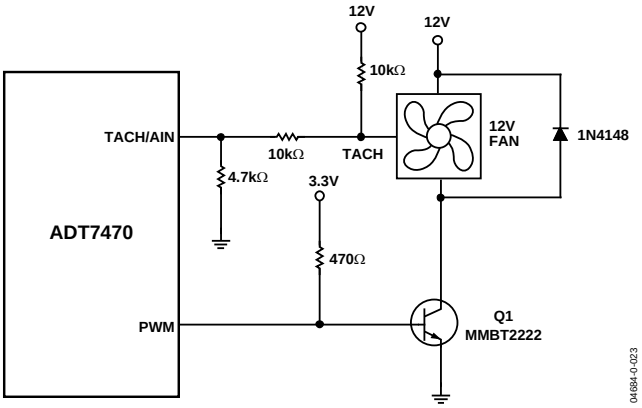

Figure 19. Driving a 3-Wire Fan Using an NPN Transistor Low Frequency

SETTING THE FAN DRIVE FREQUENCY

Configuration Register 2 Bits[6:4] configure the fan drive frequency in both high and low frequency drive mode.

Table 16. Fan Drive Frequency

Register 0x74[6:4]	High Frequency Drive (0x40[6] = 0)	Low Frequency Drive (0x40[6] = 1)
000	1.4 kHz	11 Hz
001	22.5 kHz	14.7 Hz
010	22.5 kHz	22.1 Hz
011	22.5 kHz	29.4 Hz
100	22.5 kHz	35.3 Hz
101	22.5 kHz	44.1 Hz
110	22.5 kHz	58.8 Hz
111	22.5 kHz	88.2 Hz

INVERTED PWM OUTPUT

The PWM duty cycle can be inverted by writing to the PWM Configuration registers. If the PWM duty cycle is inverted, then a PWM duty cycle setting of 33% results in an output duty cycle of 66%, as the PWM waveform is inverted.

Table 17. PWM1/PWM2 Configuration (Register 0x68)

Bit No.	Mnemonic	Description
5	INV1	0 = PWM1 duty cycle not inverted (default). 1 = PWM1 duty cycle inverted.
4	INV2	0 = PWM2 duty cycle not inverted (default). 1 = PWM2 duty cycle inverted.

Table 18. PWM3/PWM4 Configuration (Register 0x69)

Bit No.	Mnemonic	Description
5	INV3	0 = PWM3 duty cycle not inverted (default). 1 = PWM3 duty cycle inverted.
4	INV4	0 = PWM4 duty cycle not inverted (default). 1 = PWM4 duty cycle inverted.

FAN FULL SPEED FUNCTION

When Pin 13 is configured for full speed operation, pulling the pin low will cause all fans to run at the maximum PWM duty cycle. A Logic 1 is output on the PWM pins in this case.

FAN SPEED MEASUREMENT

TACH INPUTS

Pin 6, Pin 7, Pin 4, and Pin 9 are open-drain tach inputs intended for fan speed measurement.

Signal conditioning in the ADT7470 accommodates the slow rise and fall times typical of fan tachometer outputs. The maximum input signal range is 0 V to 5 V, even where V_{CC} is less than 5 V. If these inputs are supplied from fan outputs that exceed 0 V to 5 V, either resistive attenuation of the fan signal or diode clamping must be included to keep inputs within an acceptable range. Figure 20 to Figure 23 show circuits for most common fan tach outputs.

If the fan tach output has a resistive pull-up to V_{CC}, it can be connected directly to the fan input, as shown in Figure 20.

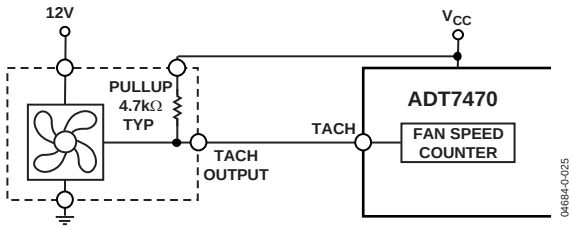

Figure 20. Fan with Tach Pull-Up to V_{CC}

If the fan output has a resistive pull-up to 12 V (or other voltage greater than 5 V), the fan output can be clamped with a Zener diode, as shown in Figure 21. The Zener diode voltage should be chosen so that it is greater than V_{IH} of the tach input but less than 5 V, allowing for the voltage tolerance of the Zener. A value of between 3 V and 5 V is suitable.

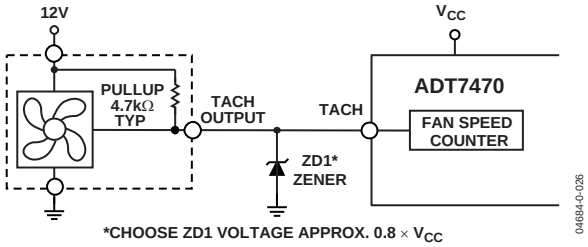

Figure 21. Fan with Tach.
Pull-Up to voltage > 5 V, for example, 12 V clamped with Zener diode.

If the fan output has a resistive pull-up to 12 V (or other voltage greater than 5 V), the fan output can be clamped with a Zener diode, as shown in Figure 21. The Zener diode voltage should be chosen so that it is greater than V_{IH} of the tach input but less than 5 V, allowing for the voltage tolerance of the Zener. A value of between 3 V and 5 V is suitable.

If the fan has a strong pull-up (less than 1 kΩ) to 12 V, or a totem-pole output, a series resistor can be added to limit the Zener current, as shown in Figure 22. Alternatively, a resistive attenuator can be used, as shown in Figure 23.

R1 and R2 should be chosen such that

$$2\text{ V} < V_{PULL\text{-}UP} \times R2/(R_{PULL\text{-}UP} + R1 + R2) < 5\text{ V}$$

The fan inputs have an input resistance of nominally 160 kΩ to ground, which should be taken into account when calculating resistor values.

With a pull-up voltage of 12 V and pull-up resistor less than 1 kΩ, suitable values for R1 and R2 are 100 kΩ and 47 kΩ. This gives a high input voltage of 3.83 V.

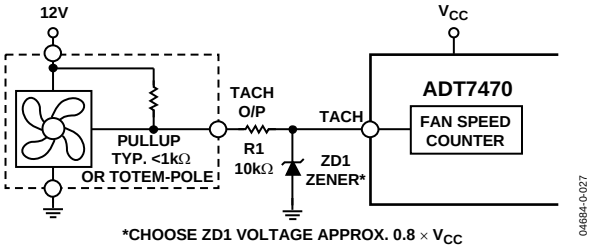

Figure 22. Fan with Strong Tach.
Pull-Up to > V_{CC} or Totem-Pole Output, Clamped with Zener and Resistor.

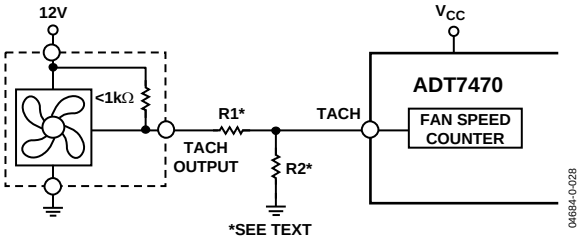

Figure 23. Fan with Strong Tach.
Pull-Up to > V_{CC} or Totem-Pole Output, Attenuated with R1/R2.

Pulse Stretching

Pulse stretching of the PWM output is performed automatically in low frequency fan drive mode, to ensure that sufficient tach readings are taken from the fan.

However, in high frequency fan drive mode, pulse stretching is disabled. If using 3-wire fans this mode, care should be taken to ensure that incomplete tach information does not occur at low PWM duty cycles, or short PWM pulse widths.

Disabling Tach measurement

The tach measurement for each fan can be disabled by writing to Configuration Register 2 Bits[3:0], at Address 0x74.

FAN SPEED MEASUREMENT

The fan counter does not count the fan tach output pulses directly, because the fan speed may be less than 1000 RPM, and it would take several seconds to accumulate a reasonably large and accurate count. Instead, the period of the fan revolution is measured by gating an on-chip 90 kHz oscillator into the input of a 16-bit counter for N periods of the fan tach output, as shown in Figure 24, so the accumulated count is actually proportional to the fan tachometer period and inversely proportional to the fan speed.

N, the number of pulses counted, is determined by the settings of Register 0x43 (fan pulses per revolution register). This register contains two bits for each fan, allowing 1, 2 (default), 3, or 4 tach pulses to be counted.

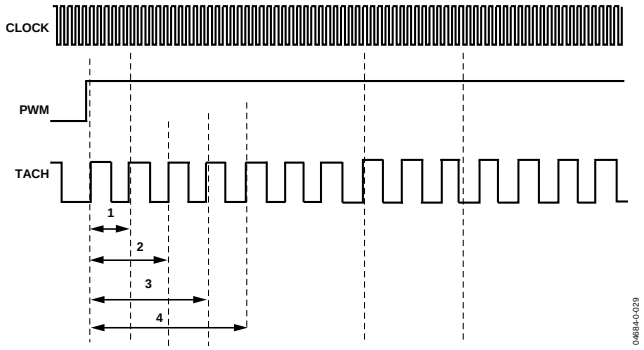

Figure 24. Fan Speed Measurement

Fan Speed Measurement Registers

The fan tachometer readings are 16-bit values consisting of a 2-byte read from the ADT7470.

Table 19. Fan Speed Measurement Registers

Register Address	Description	Default
0x2A	Tach 1 low byte	0x00
0x2B	Tach 1 high byte	0x00
0x2C	Tach 2 low byte	0x00
0x2D	Tach 2 high byte	0x00
0x2E	Tach 3 low byte	0x00
0x2F	Tach 3 high byte	0x00
0x30	Tach 4 low byte	0x00
0x31	Tach 4 high byte	0x00

Reading Fan Speed from the ADT7470

Measuring fan speed involves a 2-register read for each measurement. The low byte should be read first. This causes the high byte to be frozen until both high and low byte registers are read from, preventing erroneous tach readings.

The fan tachometer reading registers report back the number of 11.11 ms period clocks (90 kHz oscillator) gated to the fan speed counter, from the rising edge of the first fan tach pulse to the rising edge of the third fan tach pulse (assuming 2 pulses per revolution are being counted). Since the device is essentially measuring the fan tach period, the higher the count value, the slower the fan is actually running. A 16-bit fan tachometer reading of 0xFFFF indicates either that the fan has stalled or is running very slowly (<100 RPM).

Fan Tach Limit Registers

The fan tach limit registers are 16-bit values consisting of two bytes. Minimum limits determine fan under speed settings, while maximum limits determine fan over speed settings.

Table 20. Fan Tach Limit Registers

Register Address	Description	Default
0x58	Tach 1 min low byte	0xFF
0x59	Tach 1 min high byte	0xFF
0x5A	Tach 2 min low byte	0xFF
0x5B	Tach 2 min high byte	0xFF
0x5C	Tach 3 min low byte	0xFF
0x5D	Tach 3 min high byte	0xFF
0x5E	Tach 4 min low byte	0xFF
0x5F	Tach 4 min high byte	0xFF
0x60	Tach 1 max low byte	0x00
0x61	Tach 1 max high byte	0x00
0x62	Tach 2 max low byte	0x00
0x63	Tach 2 max high byte	0x00
0x64	Tach 3 max low byte	0x00
0x65	Tach 3 max high byte	0x00
0x66	Tach 4 max low byte	0x00
0x67	Tach 4 max high byte	0x00

High Limit: Comparison

Because the actual fan tach period is being measured, exceeding a fan tach limit by 1 sets the appropriate status bit and can be used to generate an SMBALERT.

Fan Speed Measurement Rate

The fan tach readings are updated once every second by default. The fast tach bit (Register 0x40 Bit[5]) controls the frequency of tach measurements. Setting this bit to 1 increases the tach measurements from one per second, to one every 250 ms.

Calculating Fan Speed and Tachometer Limits

Assuming that the measured number of tach pulses per rotation corresponds to the number of pulses counted as set in register 0x43, fan speed is calculated by

Fan Speed (RPM) = (90,000 × 60)/*Fan Tach Reading*

where *Fan Tach Reading* is the 16-bit fan tachometer reading.

For example:

Tach 1 High Byte (Reg 0x2B) = 0x17

Tach 1 Low Byte (Reg 0x2A) = 0xFF

What is Fan 1 speed in RPM?

Fan 1 tach reading = 0x17FF = 6143 decimal

RPM = (f × 60)/Fan 1 tach reading

RPM = (90000 × 60)/6143

Fan Speed = 879 RPM

Calculate the tachometer maximum and minimum limits at 1000 RPM and 500 RPM as follows:

1000 RPM

(90,000 × 60)/1000 = 5400 decimal

5400 decimal = 1518 hex

Tach 1 maximum = 1518

500 RPM

(90,000 × 60)/500 = 10800 decimal

10800 decimal = 2A30 hex

Tach 1 minimum = 2A30

Fan Pulses per Revolution

Different fan models can output either 1, 2, 3, or 4 tach pulses per revolution. The number of tach pulses per rotation for each fan should be programmed into the fan pulses per revolution register (Register 0x43). If an incorrect value is programmed, then the fan speed cannot be determined using the equation in the Calculating Fan Speed section.

Alternatively, if the number of tach pulses per rotation is not know, this register can be used in determining the number of pulses/revolution output by a given fan. By plotting fan speed measurements at maximum speed with different pulses/revolution settings, the smoothest graph with the lowest ripple determines the correct pulses/revolution value.

MANUAL FAN SPEED CONTROL

Manual fan speed control on the ADT7470 allows the user to control the PWM duty cycle for each fan via the registers. The ADT7470 powers-up in manual fan control mode, with all PWM duty cycles set to maximum. The PWM Configuration registers determine whether the fans are in manual or automatic fan control mode.

SETTING THE PWM DUTY CYCLE

The ADT7470 allows the duty cycle of any PWM output to be manually adjusted. This can be useful if users want to change fan speed in software or want to adjust PWM duty cycle output for test purposes. The PWM current duty cycle registers (Register 0x32 to Register 0x35) can be written with 8-bit values in manual fan speed control mode to manually adjust the speeds of the cooling fans.

The PWM duty cycle for each output can be set anywhere from 0% to 100%, in steps of 0.39%.

The value to be programmed into the PWM Current Duty Cycle registers can be calculated as follows:

Value (*decimal*) = *Desired PWM duty cycle*/0.39

Example 1: For a PWM Duty Cycle of 50%

Value (*decimal*) = 50/0.39 = 128 decimal
Value = 128 *decimal* or 80 *hex*

Example 2: For a PWM Duty Cycle of 33%

Value (*decimal*) = 33/0.39 = 85 decimal
Value = 85 decimal or 54 hex

Table 21. PWM Current Duty Cycle Registers

Register Address	Description	Default
0x32	PWM1 duty cycle	0xFF (100%)
0x33	PWM2 duty cycle	0xFF (100%)
0x34	PWM3 duty cycle	0xFF (100%)
0x35	PWM4 duty cycle	0xFF (100%)

Table 22.Fan Control Mode Configuration

Register/Bit	Mnenonic	Description
0x68 Bit[6]	BHVR2	This bit determines fan behavior for PWM2 output. 0 = Manual mode (PWM2 duty cycle controlled in software). 1 = Fastest speed calculated by all temperatures control PWM2 (automatic fan control mode).
0x68 Bit[7]	BHVR1	This bit determines fan behavior for PWM1 output. 0 = Manual mode (PWM1 duty cycle controlled in software). 1 = Fastest speed calculated by all temperatures control PWM1 (automatic fan control mode).
0x69 Bit[6]	BHVR4	This bit determines fan behavior for PWM4 output. 0 = Manual mode (PWM4 duty cycle controlled in software). 1 = Fastest speed calculated by all temperatures control PWM4 (automatic fan control mode).
0x69 Bit[7]	BHVR3	This bit determines fan behavior for PWM3 output. 0 = Manual mode (PWM3 duty cycle controlled in software). 1 = Fastest speed calculated by all temperatures control PWM3 (automatic fan control mode).

AUTOMATIC FAN SPEED CONTROL

In automatic fan speed control mode, fan speed automatically varies with temperature and without CPU intervention, once initial parameters are set up. The advantage is that when a system hangs, the user is guaranteed that the system is protected from overheating.

Automatic fan speed control mode is recommended for use only when temperatures > 8°C. In automatic fan control mode, if the temperature drops below 0°C, the fans automatically turn on.

For each thermal zone, when the temperature exceeds T_{MIN}, the fans turn on at PWM_{MIN} duty cycle. When the temperature reaches T_{MIN} + 20°C, the fans increase in speed to PWM_{MAX}.

To configure each fan into automatic fan control mode, the BHVR bit for that fan must be set to 1. See Table 22 for more details.

To control the fans in automatic fan control mode, a number of parameters for each fan should be set up. The PWM minimum and maximum duty cycles, as well as the minimum temperature at which each fan turns on, should be configured. Which TMP05 controls which fan also needs to be configured.

What follows are the automatic fan control configuration steps:

1. Put the fans into automatic fan control mode, by setting the BHVR bits for each fan to 1.
2. Determine which TMP05 is to control the fan, by configuring Registers 0x7C and 0x7D. Any TMP05, can control any fan, or the hottest TMP05 can control the fan.
3. Set the minimum temperature for each fan, by writing to Registers 0x6E to 0x70. When the temperature exceeds T_{MIN}, the fan runs at PWM_{MIN}.
4. Set PWM_{MIN}, the minimum PWM duty cycle, by writing to Registers 0x6A to 0x6D.
5. Set PWM_{MAX}, the maximum PWM duty cycle, by writing to registers 0x38 to 0x3B.
6. Write to the STRT bit in Configuration Register 1 (0x40 Bit[0]) to start the ADT7470 monitoring cycle. Set Bit 7 in this register to 1 to enable the TMP05 start pulse.

PWM Min Duty Cycle

The PWM min duty cycle registers, at address 0x6A to 0x6D, set the PWM duty cycle at which the fans turn on in automatic fan control mode.

The value to be programmed into the PWM Min Duty Cycle registers can be calculated as follows:

Value (*decimal*) = *Desired PWM duty cycle*/0.39

Example: For a PWM Min Duty Cycle of 30%

Value (*decimal*) = 30/0.39 = 77 decimal
Value = 77 decimal or 4D hex

The PWM min duty cycle registers have a default value of 0x80, which corresponds to a duty cycle of 50% on the PWM output pin.

PWN Max Duty Cycle

For each fan, the maximum PWM duty cycle can be set by writing to Registers 0x38 to 0x3B.

The value to be programmed into the PWM max duty cycle registers can be calculated as follows:

Value (*decimal*) = *Desired PWM duty cycle*/0.39

Example: For a PWM Max Duty Cycle of 90%

Value (*decimal*) = 90/0.39 = 230 decimal
Value = 230 decimal or E6 hex

The PWM max duty cycle registers have a default value of 0xFF, which corresponds to a Logic 1 on the PWM output pin.

PWM Current Duty Cycle

In automatic fan control mode, the current PWM duty cycle for each fan is recorded in the PWM current duty cycle registers, (0x02 to 0x35). By reading these registers, the user can keep track of the current duty cycle on each PWM output. During fan start up, these registers report back 0x00.

If the $\overline{\text{FULLSPEED}}$ pin is activated, to blast the fans to the maximum possible PWM (logic high), the PWM current duty cycle register is not updated.

REGISTER MAP

Table 23. ADT7470 Register Map

Address	R/W	Description	Default	Lockable
0x20	R	Temperature 1 Reading	0x00	
0x21	R	Temperature 2 Reading	0x00	
0x22	R	Temperature 3 Reading	0x00	
0x23	R	Temperature 4 Reading	0x00	
0x24	R	Temperature 5 Reading	0x00	
0x25	R	Temperature 6 Reading	0x00	
0x26	R	Temperature 7 Reading	0x00	
0x27	R	Temperature 8 Reading	0x00	
0x28	R	Temperature 9 Reading	0x00	
0x29	R	Temperature 10 Reading	0x00	
0x2A	R	Tach 1 Low Byte	0xFF	
0x2B	R	Tach 1 High Byte	0xFF	
0x2C	R	Tach 2 Low Byte	0xFF	
0x2D	R	Tach 2 High Byte	0xFF	
0x2E	R	Tach 3 Low Byte	0xFF	
0x2F	R	Tach 3 High Byte	0xFF	
0x30	R	Tach 4 Low Byte	0xFF	
0x31	R	Tach 4 High Byte	0xFF	
0x32	R/W	PWM1 Current Duty Cycle	0xFF	
0x33	R/W	PWM2 Current Duty Cycle	0xFF	
0x34	R/W	PWM3 Current Duty Cycle	0xFF	
0x35	R/W	PWM4 Current Duty Cycle	0xFF	
0x36	R	Reserved	0x00	
0x37	R/W	ADI Test Register 1	0x00	y
0x38	R/W	PWM1 Max Duty Cycle	0xFF	
0x39	R/W	PWM2 Max Duty Cycle	0xFF	
0x3A	R/W	PWM3 Max Duty Cycle	0xFF	
0x3B	R/W	PWM4 Max Duty Cycle	0xFF	
0x3C	R/W	ADI Test Register 2	0x00	y
0x3D	R	Device ID Register	0x70	
0x3E	R	Company ID Number	0x41	
0x3F	R	Revision Number	0x02	
0x40	R/W	Configuration Register 1	0x01	
0x41	R	Interrupt Status Register 1	0xXX	
0x42	R	Interrupt Status Register 2	0xXX	
0x43	R/W	Fan Pulses per Revolution	0x55	
0x44	R/W	Temperature 1 Low Limit	0x81	
0x45	R/W	Temperature 1 High Limit	0x7F	
0x46	R/W	Temperature 2 Low Limit	0x81	
0x47	R/W	Temperature 2 High Limit	0x7F	
0x48	R/W	Temperature 3 Low Limit	0x81	
0x49	R/W	Temperature 3 High Limit	0x7F	
0x4A	R/W	Temperature 4 Low Limit	0x81	
0x4B	R/W	Temperature 4 High Limit	0x7F	
0x4C	R/W	Temperature 5 Low Limit	0x81	
0x4D	R/W	Temperature 5 High Limit	0x7F	
0x4E	R/W	Temperature 6 Low Limit	0x81	
0x4F	R/W	Temperature 6 High Limit	0x7F	
0x50	R/W	Temperature 7 Low Limit	0x81	
0x51	R/W	Temperature 7 High Limit	0x7F	
0x52	R/W	Temperature 8 Low Limit	0x81	
0x53	R/W	Temperature 8 High Limit	0x7F	

Address	R/W	Description	Default	Lockable
0x54	R/W	Temperature 9 Low Limit	0x81	
0x55	R/W	Temperature 9 High Limit	0x7F	
0x56	R/W	Temperature 10 Low Limit	0x81	
0x57	R/W	Temperature 10 High Limit	0x7F	
0x58	R/W	Tach 1 Min Low Byte	0xFF	
0x59	R/W	Tach 1 Min High Byte	0xFF	
0x5A	R/W	Tach 2 Min Low Byte	0xFF	
0x5B	R/W	Tach 2 Min High Byte	0xFF	
0x5C	R/W	Tach 3 Min Low Byte	0xFF	
0x5D	R/W	Tach 3 Min High Byte	0xFF	
0x5E	R/W	Tach 4 Min Low Byte	0xFF	
0x5F	R/W	Tach 4 Min High Byte	0xFF	
0x60	R/W	Tach 1 Max Low Byte	0x00	
0x61	R/W	Tach 1 Max High Byte	0x00	
0x62	R/W	Tach 2 Max Low Byte	0x00	
0x63	R/W	Tach 2 Max High Byte	0x00	
0x64	R/W	Tach 3 Max Low Byte	0x00	
0x65	R/W	Tach 3 Max High Byte	0x00	
0x66	R/W	Tach 4 Max Low Byte	0x00	
0x67	R/W	Tach 4 Max High Byte	0x00	
0x68	R/W	PWM1/2 Config Register	0x00	y
0x69	R/W	PWM3/4 Config Register	0x00	y
0x6A	R/W	PWM1 Min Duty Cycle	0x80	y
0x6B	R/W	PWM2 Min Duty Cycle	0x80	y
0x6C	R/W	PWM3 Min Duty Cycle	0x80	y
0x6D	R/W	PWM4 Min Duty Cycle	0x80	y
0x6E	R/W	Temperature 1 T_{MIN}	0x5A	
0x6F	R/W	Temperature 2 T_{MIN}	0x5A	
0x70	R/W	Temperature 3 T_{MIN}	0x5A	
0x71	R/W	Temperature 4 T_{MIN}	0x5A	
0x72	R/W	Interrupt Mask 1 Register	0x00	
0x73	R/W	Interrupt Mask 2 Register	0x00	
0x74	R/W	Configuration Register 2	0x00	
0x75	R/W	Reserved. Do not write to this register.	0x00	
0x76	R/W	Reserved. Do not write to this register.	0x00	
0x77	R/W	ADI Test Register 3	0x00	y
0x78	R	Max TMP05 Temperature	0x00	
0x79	R/W	Reserved. Do not write to this register.	0x00	
0x7A	R/W	Reserved. Do not write to this register.	0x00	
0x7B	R/W	Reserved. Do not write to this register.	0x00	
0x7C	R/W	TMP05 Zone Select 1	0x00	
0x7D	R/W	TMP05 Zone Select 2	0x00	
0x7E	R/W	Reserved. Do not write to this register.	0x00	
0x7F	R/W	GPIO Enable	0x00	
0x80	R/W	GPIO Config	0x00	
0x81	R	GPIO Status	0x00	

DETAILED REGISTER DESCRIPTIONS

Table 24. Register 0x20 to Register 0x29. Temperature Reading Registers (Power-On Default = 0x00).

Register Address	Read/Write	Description	Comments
0x20	Read-only	8-bit Temperature 1 reading (from TMP05 sensor).	Bit[7] = Sign bit, indicates if temperature is positive or negative
0x21	Read-only	8-bit Temperature 2 reading (from TMP05 sensor).	
0x22	Read-only	8-bit Temperature 3 reading (from TMP05 sensor).	Bits[6:0] = temperature result
0x23	Read-only	8-bit Temperature 4 reading (from TMP05 sensor).	
0x24	Read-only	8-bit Temperature 5 reading (from TMP05 sensor).	To calculate the temperature:
0x25	Read-only	8-bit Temperature 6 reading (from TMP05 sensor).	Positive Temperature = ADC Code (decimal)
0x26	Read-only	8-bit Temperature 2 reading (from TMP05 sensor).	Negative Temperature = ADC (decimal) minus 256
0x27	Read-only	8-bit Temperature 3 reading (from TMP05 sensor).	
0x28	Read-only	8-bit Temperature 4 reading (from TMP05 sensor).	
0x29	Read-only	8-bit Temperature 5 reading (from TMP05 sensor).	

Readings from daisy-chained TMP05 are processed and loaded into the temperature reading registers.

Table 25. Register 0x2A to Register 0x31. Fan Tach Reading Registers (Power-On Default = 0x00).

Register Address	Read/Write	Description
0x2A	Read-only	Tach 1 low byte (8 MSBs of reading).
0x2B	Read-only	Tach 1 high byte (8 LSBs of reading).
0x2C	Read-only	Tach 2 high byte (8 MSBs of reading).
0x2D	Read-only	Tach 2 low byte (8 LSBs of reading).
0x2E	Read-only	Tach 3 high byte (8 MSBs of reading).
0x2F	Read-only	Tach 3 low byte (8 LSBs of reading).
0x30	Read-only	Tach 4 high byte (8 MSBs of reading).
0x31	Read-only	Tach 4 low byte (8 LSBs of reading).

The fan tach reading registers shown in Table 25 count the number of 11.11 μs periods (based on an internal 90 kHz clock) that occur between a number of consecutive fan tach pulses (default = 2). The number of tach pulses used to count can be changed using the fan pulses per revolution register (Register 0x43). This allows the fan speed to be accurately measured. Because a valid fan tachometer reading requires that two bytes are read, the low byte must be read first. Both the low and high bytes are then frozen until read. At power-on, these registers contain 0x0000 until such time as the first valid fan tach measurement is read in to these registers. This prevents false interrupts from occurring while the fans are spinning up.

A count of 0xFFFF indicates that a fan is

- Stalled or blocked (object jamming the fan).
- Failed (internal circuitry destroyed).
- Not populated. The ADT7470 expects to see a fan connected to each tach. If a fan is not connected to that tach, its tach minimum high and low byte are set to 0xFFFF.

Table 26. Register 0x32 to Register 0x35. Current PWM Duty Cycle Registers (Power-On Default = 0xFF).

Register Address	Read/Write	Description
0x32	Read/Write	PWM1 current duty cycle (0% to 100% duty cycle = 0x00 to 0xFF).
0x33	Read/Write	PWM2 current duty cycle (0% to 100% duty cycle = 0x00 to 0xFF).
0x34	Read/Write	PWM3 current duty cycle (0% to 100% duty cycle = 0x00 to 0xFF).
0x35	Read/Write	PWM4 current duty cycle (0% to 100% duty cycle = 0x00 to 0xFF).

The current PWM duty cycle registers, shown in Table 26, reflect the PWM duty cycle driving each fan at any given time. When in automatic fan speed control mode, the ADT7470 reports the PWM duty cycles back through these registers. The PWM duty cycle values vary according to temperature in automatic fan speed control mode. During fan startup, these registers report back 0x00. In manual fan control mode, the PWM duty cycle outputs can be set to any duty cycle value by writing to these registers.

Table 27. Register 0x38 to Register 0x3B. PWM Max Duty Cycle Registers (Power-On Default = 0xFF).

Register Address	Read/Write	Description
0x38	Read/Write	PWM1 max duty cycle: PWM1 Min duty cycle value (register 0x6A) to 100% duty cycle.
0x39	Read/Write	PWM2 max duty cycle: PWM2 Min duty cycle value (register 0x6B) to 100% duty cycle.
0x3A	Read/Write	PWM3 max duty cycle: PWM3 Min duty cycle value (register 0x6C) to 100% duty cycle.
0x3B	Read/Write	PWM4 max duty cycle: PWM4 Min duty cycle value (register 0x6D) to 100% duty cycle.

Table 28. Register 0x3D. Device ID Register (Power-On Default = 0x70).

Register Address	Read/Write	Description
0x3D	Read only	Device ID.

The device ID register contains the ADT7470 device ID value as a means of identifying the part over the bus.

Table 29. Register 0x3E. Company ID Register (Power-On Default = 0x41).

Register Address	Read/Write	Description
0x3E	Read only	Company ID.

The company ID register contains 0x41, the manufacturer ID number representative of the Analog Devices, Inc. product.

Table 30. Register 0x3F. Revision Register (Power-On Default = 0x02).

Register Address	Read/Write	Description
0x3F	Read only	Revision Register.

The revision register contains the revision number of the ADT7470.

Table 31. Register 0x40. Configuration Register 1 (Power-On Default = 0x01).

Bit Name	Read/Write	Description
[0] STRT	Read/Write	Logic 1 enables monitoring and PWM control outputs based on the limit settings programmed. Logic 0 disables monitoring and PWM control based on the default power-up limit settings. The limit values programmed are preserved even if a Logic 0 is written to this bit and the default settings are enabled.
[1] Reserved	Read/Write	Reserved. Write 0 to this bit.
[2] Reserved	Read/Write	Reserved. Write 0 to this bit.
[3] TODIS	Read/Write	Writing a 1 disables SMBus timeout.
[4] LOCK	Write Once	Once this bit is set, all lockable registers become read-only and cannot be modified until the ADT7470 is powered down and powered up again.
[5] FST_TCH	Read/Write	Enable Fast Tach measurement. 0 = Tach measurement rate is 1 measurement per second 1= Tach measurement rate is 1 measurement every 250ms
[6] HF_LF	Read/Write	This bit switches between high frequency and low frequency fan drive. 0 (default) = high frequency fan drive (1.4 kHz or 22.5 kHz. See Configuration Register 2, Register 0x74, Bits [6:4]) in Table 44. 1 = low frequency fandrive (frequency determined by Configuration Register 2, Register 0x74, Bits[6:4]) in Table 44.
[7] T05_STB	Read/Write	Select configuration for Pin 13. 0 (default) =$\overline{\text{FULL SPEED}}$ input. 1 = TMP05 start pulse output.

Table 32. Register 0x41. Interrupt Status Register 1 (Power-On Default = 0x00).

Bit Name	Read/Write	Description
[0] R1T	Read-only	A 1 indicates that the Remote 1 temperature high or low limit has been exceeded. This bit is cleared on a read of the status register only if the error condition has subsided.
[1] R2T	Read-only	A 1 indicates that the Remote 2 temperature high or low limit has been exceeded. This bit is cleared on a read of the status register only if the error condition has subsided.
[2] R3T	Read-only	A 1 indicates that the Remote 3 temperature high or low limit has been exceeded. This bit is cleared on a read of the status register only if the error condition has subsided.
[3] R4T	Read-only	A 1 indicates that the Remote 4 temperature high or low limit has been exceeded. This bit is cleared on a read of the status register only if the error condition has subsided.
[4] R5T	Read-only	A 1 indicates that the Remote 5 temperature high or low limit has been exceeded. This bit is cleared on a read of the status register only if the error condition has subsided.
[5] R6T	Read-only	A 1 indicates that the Remote 6 temperature high or low limit has been exceeded. This bit is cleared on a read of the status register only if the error condition has subsided.
[6] R7T	Read-only	A 1 indicates that the Remote 7 temperature high or low limit has been exceeded. This bit is cleared on a read of the status register only if the error condition has subsided.
[7] OOL	Read-only	A 1 indicates that an out-of-limit event has been latched in Status Register 2. This bit is a logical OR of all status bits in Status Register 2. Software can test this bit in isolation to determine whether any of the temperature or fan speed readings represented by Status Register 2 are out of limit. This saves the need to read Status Register 2 every interrupt or polling cycle.

Table 33. Register 0x42. Interrupt Status Register 2 (Power-On Default = 0x00).

Bit Name	Read/Write	Description
[0] R8T	Read-only	A 1 indicates that the Remote 8 temperature high or low limit has been exceeded. This bit is cleared on a read of the status register only if the error condition has subsided.
[1] R9T	Read-only	A 1 indicates that the Remote 9 temperature high or low limit has been exceeded. This bit is cleared on a read of the status register only if the error condition has subsided.
[2] R10T	Read-only	A 1 indicates that the Remote 10 temperature high or low limit has been exceeded. This bit is cleared on a read of the status register only if the error condition has subsided.
[3] NORM	Read-only	A 1 indicates that the measured temperatures are normal (below T_{MIN}), and the fans should be off.
[4] Fan 1	Read-only	A 1 indicates that Fan 1 has gone above max speed or dropped below min speed.
[5] Fan 2	Read-only	A 1 indicates that Fan 2 has gone above max speed or dropped below min speed.
[6] Fan 3	Read-only	A 1 indicates that Fan 3 has gone above max speed or dropped below min speed.
[7] Fan 4	Read-only	A 1 indicates that Fan 4 has gone above max speed or dropped below min speed.

Table 34. Register 0x43. Fan Pulses per Revolution Register (Power-On Default = 0x55).

Bit Name	Read/Write	Description
[1:0] Fan 1	Read/Write	Sets the number of pulses to be counted when measuring Fan 1 speed. Can be used to determine fan's pulses per revolution number for unknown fan type. Pulses Counted 00 = 1 01 = 2 (default) 10 = 3 11 = 4
[3:2] Fan 2	Read/Write	Sets the number of pulses to be counted when measuring Fan 2 speed. Can be used to determine fan's pulses per revolution number for unknown fan type. Pulses Counted 00 = 1 01 = 2 (default) 10 = 3 11 = 4
[5:4] Fan 3	Read/Write	Sets the number of pulses to be counted when measuring Fan 3 speed. Can be used to determine fan's pulses per revolution for unknown fan type. Pulses Counted 00 = 1 01 = 2 (default) 10 = 3 11 = 4
[7:6] Fan 4	Read/Write	Sets the number of pulses to be counted when measuring Fan 4 speed. Can be used to determine fan's pulses per revolution for unknown fan type. Pulses Counted 00 = 1 01 = 2 (default) 10 = 3 11 = 4

Table 35. Register 0x44 to Register 0x57. Temperature Limit Registers.

Register Address	Read/Write	Description	Power-On Default
0x44	Read/Write	Temperature 1 low limit	0x81
0x45	Read/Write	Temperature 1 high limit	0x7F
0x46	Read/Write	Temperature 2 low limit	0x81
0x47	Read/Write	Temperature 2 high limit	0x7F
0x48	Read/Write	Temperature 3 low limit	0x81
0x49	Read/Write	Temperature 3 high limit	0x7F
0x4A	Read/Write	Temperature 4 low limit	0x81
0x4B	Read/Write	Temperature 4 high limit	0x7F
0x4C	Read/Write	Temperature 5 low limit	0x81
0x4D	Read/Write	Temperature 5 high limit	0x7F
0x4E	Read/Write	Temperature 6 low limit	0x81
0x4F	Read/Write	Temperature 6 high limit	0x7F
0x50	Read/Write	Temperature 7 low limit	0x81
0x51	Read/Write	Temperature 7 high limit	0x7F
0x52	Read/Write	Temperature 8 low limit	0x81
0x53	Read/Write	Temperature 8 high limit	0x7F
0x54	Read/Write	Temperature 9 low limit	0x81
0x55	Read/Write	Temperature 9 high limit	0x7F
0x56	Read/Write	Temperature 10 low limit	0x81
0x57	Read/Write	Temperature 10 high limit	0x7F

Exceeding any of the temperature limits shown in Table 35 by 1°C causes the appropriate status bit to be set in the interrupt status registers.

High limits: An interrupt is generated when a value exceeds its high limit (> comparison).

Low limits: An interrupt is generated when a value is equal to or below its low limit (≤ comparison).

Table 36. Register 0x58 to Register 0x67. Fan Tachometer Limit Registers.

Register Address	Read/Write	Description	Power-On Default
0x58	Read/Write	Tach 1 min low byte	0xFF
0x59	Read/Write	Tach 1 min high byte	0xFF
0x5A	Read/Write	Tach 2 min low byte	0xFF
0x5B	Read/Write	Tach 2 min high byte	0xFF
0x5C	Read/Write	Tach 3 min low byte	0xFF
0x5D	Read/Write	Tach 3 min high byte	0xFF
0x5E	Read/Write	Tach 4 min low byte	0xFF
0x5F	Read/Write	Tach 4 min high byte	0xFF
0x60	Read/Write	Tach 1 max low byte	0x00
0x61	Read/Write	Tach 1 max high byte	0x00
0x62	Read/Write	Tach 2 max low byte	0x00
0x63	Read/Write	Tach 2 max high byte	0x00
0x64	Read/Write	Tach 3 max low byte	0x00
0x65	Read/Write	Tach 3 max high byte	0x00
0x66	Read/Write	Tach 4 max low byte	0x00
0x67	Read/Write	Tach 4 max high byte	0x00

Exceeding any of the tach min limit registers shown in Table 36 by 1 indicates that the fan is running too slowly or has stalled. The appropriate status bit is set in Interrupt Status Register 2 to indicate the fan failure.
Exceeding any of the tach max limit registers by 1 indicates that the fan is too fast. The appropriate status bit is set in Interrupt Status Register 2 to indicate the fan failure.

Table 37. Register 0x68. PWM1/PWM2 Configuration Register (Power-On Default = 0x00).

Bit Name	Read/Write	Description
[0]	N/A	Set to 0 (default).
[1]	N/A	Set to 0 (default).
[2]	N/A	Set to 0 (default).
[3]	N/A	Set to 0 (default).
[4] INV2	Read/Write	Setting this bit to 1 inverts the PWM2 output. Default = 0.
[5] INV1	Read/Write	Setting this bit to 1 inverts the PWM1 output. Default = 0.
[6] BHVR2	Read/Write	This bit assigns fan behavior for PWM2 output. 0 = manual fan control mode (PWM duty cycle controlled in software). 1 = automatic fan control mode
[7] BHVR1	Read/Write	This bit assigns fan behavior for PWM1 output. 0 = manual fan control mode (PWM duty cycle controlled in software). 1 = automatic fan control mode.

Table 38. Register 0x69. PWM3/PWM4 Configuration Register (Power-On Default = 0x00).

Bit Name	Read/Write	Description
[0]	N/A	Set to 0 (default).
[1]	N/A	Set to 0 (default).
[2]	N/A	Set to 0 (default).
[3]	N/A	Set to 0 (default).
[4] INV4	Read/Write	Setting this bit to 1 inverts the PWM4 output. Default = 0
[5] INV3	Read/Write	Setting this bit to 1 inverts the PWM3 output. Default = 0
[6] BHVR4	Read/Write	This bit assigns fan behavior for PWM4 output. 0 = manual fan control mode (PWM duty cycle controlled in software). 1 = (automatic fan control mode.
[7] BHVR3	Read/Write	This bit assigns fan behavior for PWM3 output. 0 = manual fan control mode (PWM duty cycle controlled in software). 1 = automatic fan control mode.

Table 39. Register 0x6A to Register 0x6D. PWM_{MIN} Duty Cycle Registers (Power-On Default = 0x80 (50% Duty Cycle).

Register Address	Read/Write	Description
0x6A	Read/Write	PWM1 min duty cycle.
0x6B	Read/Write	PWM2 min duty cycle.
0x6C	Read/Write	PWM3 min duty cycle.
0x6D	Read/Write	PWM4 min duty cycle.

Table 40. PWM_{MIN} Duty Cycle Registers Detailed Description

Bit Name	Read/Write	Description
[7:0] PWM Duty Cycle	Read/Write	These bits define the PWNMIN duty cycle for PWMx (x = 1 to 4). 0x00 = 0% duty cycle (fan off). 0x40 = 25% duty cycle. 0x80 = 50% duty cycle. 0xFF = 100% PMW max duty cycle (full fan speed).

Table 41. Register 0x6E to Register 0x71. T_{MIN} Registers (Power-On Default = 0x5A (90°C)).

Register Address	Read/Write	Description
0x6E	Read/Write	Temperature 1 T_{MIN}.
0x6F	Read/Write	Temperature 2 T_{MIN}.
0x70	Read/Write	Temperature 3 T_{MIN}.
0x71	Read/Write	Temperature 4 T_{MIN}.

Table 41 shows the T_{MIN} registers for each thermal zone. When the temperature measured exceeds T_{MIN}, the appropriate fan runs at minimum speed (PWM_{MIN}). They increase to maximum speed (PWM_{MAX}) at T_{MIN} + 20°C.

Table 42. Register 0x72. Interrupt Mask Register 1 (Power-On Default = 0x00).

Bit Name	Read/Write	Description
[7] Not in use	Read/Write	Not in use. Write 0 to this bit.
[6] R7T	Read/Write	A 1 masks the Temperature 7 value from generating an interrupt on the $\overline{\text{SMBALERT}}$ output. The R1T bit is set as normal in the status register for out-of-limit conditions.
[5] R6T	Read/Write	A 1 masks the Temperature 6 value from generating an interrupt on the $\overline{\text{SMBALERT}}$ output. The R2T bit is set as normal in the status register for out-of-limit conditions.
[4] R5T	Read/Write	A 1 masks the Temperature 5 value from generating an interrupt on the $\overline{\text{SMBALERT}}$ output. The R3T bit is set as normal in the status register for out-of-limit conditions.
[3] R4T	Read/Write	A 1 masks the Temperature 4 value from generating an interrupt on the $\overline{\text{SMBALERT}}$ output. The R4T bit is set as normal in the status register for out-of-limit conditions.
[2] R3T	Read/Write	A 1 masks the Temperature 3 value from generating an interrupt on the $\overline{\text{SMBALERT}}$ output. The R5T bit is set as normal in the status register for out-of-limit conditions.
[1] R2T	Read/Write	A 1 masks the Temperature 2 value from generating an interrupt on the $\overline{\text{SMBALERT}}$ output. The R6T bit is set as normal in the status register for out-of-limit conditions.
[0] R1T	Read/Write	A 1 masks the Temperature 1 value from generating an interrupt on the $\overline{\text{SMBALERT}}$ output. The R7T bit is set as normal in the status register for out-of-limit conditions.

Table 43. Register 0x73. Interrupt Mask Register 2 (Power-On Default = 0x00).

Bit Name	Read/Write	Description
[7] Fan 4	Read/Write	A 1 masks the Fan 4 value from generating an interrupt on the $\overline{\text{SMBALERT}}$ output. The Fan 4 bit is set as normal in the status register for out-of-limit conditions.
[6] Fan 3	Read/Write	A 1 masks the Fan 3 value from generating an interrupt on the $\overline{\text{SMBALERT}}$ output. The Fan 3 bit is set as normal in the status register for out-of-limit conditions.
[5] Fan 2	Read/Write	A 1 masks the Fan 2 value from generating an interrupt on the $\overline{\text{SMBALERT}}$ output. The Fan 2 bit is set as normal in the status register for out-of-limit conditions.
[4] Fan 1	Read/Write	A 1 masks the Fan 1 value from generating an interrupt on the $\overline{\text{SMBALERT}}$ output. The Fan 1 bit is set as normal in the status register for out-of-limit conditions.
[3] Daisy chain	Read/Write	A 1 masks the pulsing of the $\overline{\text{SMBALERT}}$while enabling daisy chain, writing to Bit [7] Register 0x40.
[2] R10T	Read/Write	A 1 masks the Temperature 10 value from generating an interrupt on the $\overline{\text{SMBALERT}}$ output. The R10T bit is set as normal in the status register for out-of-limit conditions.
[1] R9T	Read/Write	A 1 masks the Temperature 9 value from generating an interrupt on the $\overline{\text{SMBALERT}}$ output. The R9T bit is set as normal in the status register for out-of-limit conditions.
[0] R8T	Read/Write	A 1 masks the Temperature 8 value from generating an interrupt on the $\overline{\text{SMBALERT}}$ output. The R8T bit is set as normal in the status register for out-of-limit conditions.

Table 44. Register 0x74. Configuration Register 2 (Power-On Default = 0x00).

Bit Name	Read/Write	Description		
[7] SHDN	Read/Write	Shutdown/low current mode.		
[6:4] FREQ	Read/Write	These bits control PWM1–PWM4 frequency when the fan drive is configured as a low frequency drive.		
		Register 0x74[6:4]	**Register 0x40[6] = 1**	**Register 0x40[6] = 0**
		000	11.0 Hz	1.4 kHz
		001	14.7 Hz	22.5 kHz
		010	22.1 Hz	22.5 kHz
		011	29.4 Hz	22.5 kHz
		100	35.3 Hz	22.5 kHz
		101	44.1 Hz	22.5 kHz
		110	58.8 Hz	22.5 kHz
		111	88.2 Hz	22.5 kHz
[3] T4_dis	Read/Write	Writing a 1 disables Tach 4 measurements.		
[2] T3_dis	Read/Write	Writing a 1 disables Tach 3 measurements.		
[1] T2_dis	Read/Write	Writing a 1 disables Tach 2 measurements.		
[0] T1_dis	Read/Write	Writing a 1 disables Tach 1 measurements.		

Table 45. Register 0x78. Max TMP05 Temperature (Power-On Default = 0x00).

Bit Name	Read/Write	Description
[7:0] TMP05_MAX	Read-only	This register indicates the maximum of all TMP05 temperatures.

Table 46. Register 0x7C. TMP05 Zone Select 1 (Power-On Default = 0x00).

Bit Name	Read/Write	Description	
[7:4] zone_fan1[3:0]	Read/Write	These bits determine which temperature zone controls Fan 1.	
		zone_fan1[3:0]	**Description**
		0000	max_temperature from Register 0x78 controls Fan 1.
		0001	Temperature 1 from Register 0x20 controls Fan 1.
		0010	Temperature 2 from Register 0x21 controls Fan 1.
		0011	Temperature 3 from Register 0x22 controls Fan 1.
		0100	Temperature 4 from Register 0x23 controls Fan 1.
		0101	Temperature 5 from Register 0x24 controls Fan 1.
		0110	Temperature 6 from Register 0x25 controls Fan 1.
		0111	Temperature 7 from Register 0x26 controls Fan 1.
		1000	Temperature 8 from Register 0x27 controls Fan 1.
		1001	Temperature 9 from Register 0x28 controls Fan 1.
		1010	Temperature 10 from Register 0x29 controls Fan 1.
[3:0] zone_fan2[3:0]	Read/Write	These bits determine which temperature zone controls Fan 2.	
		zone_fan2[3:0]	**Description**
		0000	max_temperature from Register 0x78 controls Fan 2.
		0001	Temperature 1 from Register 0x20 controls Fan 2.
		0010	Temperature 2 from Register 0x21 controls Fan 2.
		0011	Temperature 3 from Register 0x22 controls Fan 2.
		0100	Temperature 4 from Register 0x23 controls Fan 2.
		0101	Temperature 5 from Register 0x24 controls Fan 2.
		0110	Temperature 6 from Register 0x25 controls Fan 2.
		0111	Temperature 7 from Register 0x26 controls Fan 2.
		1000	Temperature 8 from Register 0x27 controls Fan 2.
		1001	Temperature 9 from Register 0x28 controls Fan 2.
		1010	Temperature 10 from Register 0x29 controls Fan 2.

Table 47. Register 0x7D. TMP05 Zone Select 2 (Power-On Default = 0x00).

Bit Name	Read/Write	Description	
[7:4] zone_fan3[3:0]	Read/Write	These bits determine which temperature zone controls Fan 3.	
		zone_fan3[3:0]	**Description**
		0000	max_temperature from Register 0x78 controls Fan 3.
		0001	Temperature 1 from Register 0x20 controls Fan 3.
		0010	Temperature 2 from Register 0x21 controls Fan 3.
		0011	Temperature 3 from Register 0x22 controls Fan 3.
		0100	Temperature 4 from Register 0x23 controls Fan 3.
		0101	Temperature 5 from Register 0x24 controls Fan 3.
		0110	Temperature 6 from Register 0x25 controls Fan 3.
		0111	Temperature 7 from Register 0x26 controls Fan 3.
		1000	Temperature 8 from Register 0x27 controls Fan 3.
		1001	Temperature 9 from Register 0x28 controls Fan 3.
		1010	Temperature 10 from Register 0x29 controls Fan 3.
[3:0] zone_fan4[3:0]	Read/Write	These bits determine which temperature zone controls Fan 4.	
		zone_fan4[3:0]	**Description**
		0000	max_temperature from Register 0x78 controls Fan 4.
		0001	Temperature 1 from Register 0x20 controls Fan 4.
		0010	Temperature 2 from Register 0x21 controls Fan 4.
		0011	Temperature 3 from Register 0x22 controls Fan 4.
		0100	Temperature 4 from Register 0x23 controls Fan 4.
		0101	Temperature 5 from Register 0x24 controls Fan 4.
		0110	Temperature 6 from Register 0x25 controls Fan 4.
		0111	Temperature 7 from Register 0x26 controls Fan 4.
		1000	Temperature 8 from Register 0x27 controls Fan 4.
		1001	Temperature 9 from Register 0x28 controls Fan 4.
		1010	Temperature 10 from Register 0x29 controls Fan 4.

Table 48. Register 0x7F. GPIO Enable (Power-On Default = 0x00).

Bit Name	Read/Write	Description
[7:6] Reserved	Read/Write	Reserved. Write 0x0 to these bits.
[5:4] Reserved	Read/Write	Reserved. This bit should be set to 0.
[3] GPIO1_en	Read/Write	PWM1 becomes a GPIO.
[2] GPIO2_en	Read/Write	PWM2 becomes a GPIO.
[1] GPIO3_en	Read/Write	PWM3 becomes a GPIO.
[0] GPIO4_en	Read/Write	PWM4 becomes a GPIO.

Table 49. Register 0x80. GPIO CONFIG (Power-On Default = 0x00).

Bit Name	Read/Write	Description
[7] GPIO1_d	Read/Write	This bit sets the direction of GPIO 1 when the PWM1 pin is configured as GPIO. 1 = output; 0 = input. Data for GPIO 1 is set by the LSB of the PWM1 min duty cycle register.
[6] GPIO1_p	Read/Write	This bit sets the polarity of GPIO 1 when the PWM1 pin is configured as GPIO. 1 = active high; 0 = active low.
[5] GPIO2_d	Read/Write	This bit sets the direction of GPIO 2 when the PWM2 pin is configured as GPIO. 1= output; 0 = input. Data for GPIO 2 is set by the LSB of the PWM2 min duty cycle register.
[4] GPIO2_p	Read/Write	This bit sets the polarity of GPIO 2 when the PWM2 pin is configured as GPIO. 1 = active high; 0 = active low.
[3] GPIO3_d	Read/Write	This bit sets the direction of GPIO 3 when the PWM3 pin is configured as GPIO. 1= output; 0 = input. Data for GPIO 3 is set by the LSB of the PWM3 min duty cycle register.
[2] GPIO3_p	Read/Write	This bit sets the polarity of GPIO 3 when the PWM3 pin is configured as GPIO. 1 = active high; 0 = active low.
[1] GPIO4_d	Read/Write	This bit sets the direction of GPIO 4 when the PWM4 pin is configured as GPIO. 1= output; 0 = input. Data for GPIO 4 is set by the LSB of the PWM4 min duty cycle register.
[0] GPIO4_p	Read/Write	This bit sets the polarity of GPIO 4 when the PWM4 pin is configured as GPIO. 1 = active high; 0 = active low.

Table 50. Register 0x81. GPIO Status (Power-On Default = 0x00).

Bit Name	Read/Write	Description
[7:4] GPIO_s	Read/Write	These bits indicate the status of the GPIO when the corresponding PWM pin is configured as GPIO. When GPIO is configured as an input, these bits are read-only. They are set when the input is asserted. (Asserted can be high or low depending on the setting of the GPIO polarity.) When GPIO is configured as an output, these bits are read/write. Setting these bits asserts the GPIO output. (Asserted can be high or low depending on the setting of GPIO4 polarity.)
[7] GPIO4_s	Read/Write	This bit indicates the status of GPIO 4 when the PWM4 pin is configured as GPIO.
[6] GPIO3_s	Read/Write	This bit indicates the status of GPIO 3 when the PWM3 pin is configured as GPIO.
[5] GPIO2_s	Read/Write	This bit indicates the status of GPIO 2 when the PWM2 pin is configured as GPIO.
[4] GPIO1_s	Read/Write	This bit indicates the status of GPIO 1 when the PWM1 pin is configured as GPIO.
[3:0] Reserved	Read/Write	Test Bit. For Analog Devices use only.

OUTLINE DIMENSIONS

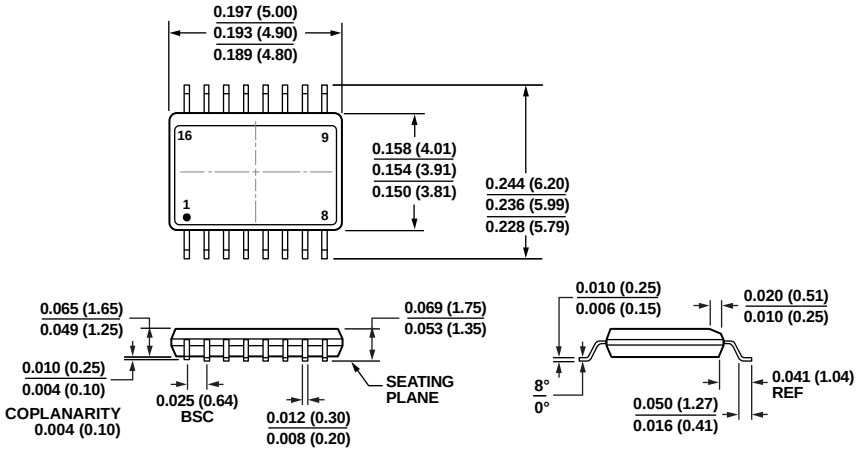

COMPLIANT TO JEDEC STANDARDS MO-137-AB

CONTROLLING DIMENSIONS ARE IN INCHES; MILLIMETER DIMENSIONS (IN PARENTHESES) ARE ROUNDED-OFF INCH EQUIVALENTS FOR REFERENCE ONLY AND ARE NOT APPROPRIATE FOR USE IN DESIGN.

01-28-2008-A

Figure 25. 16-Lead Shrink Small Outline Package [QSOP] (RQ-16)
Dimensions shown in inches and (millimeters)

ORDERING GUIDE

Model[1]	Temperature Range	Package Description	Package Option
ADT7470ARQZ	−40°C to +125°C	16-Lead QSOP	RQ-16
ADT7470ARQZ-REEL	−40°C to +125°C	16-Lead QSOP	RQ-16
ADT7470ARQZ-REEL7	−40°C to +125°C	16-Lead QSOP	RQ-16
EVAL-ADT7470EBZ		Evaluation Board	

[1] Z = RoHS Compliant Part.

NOTES

Purchase of licensed I²C components of Analog Devices or one of its sublicensed Associated Companies conveys a license for the purchaser under the Philips I²C Patent Rights to use these components in an I²C system, provided that the system conforms to the I²C Standard Specification as defined by Philips.

©2004–2013 Analog Devices, Inc. All rights reserved. Trademarks and registered trademarks are the property of their respective owners.
D04684-0-4/13(E)

Looking for pricing, stock, or lifecycle information?

Click below to explore more details on WIN SOURCE:

- View ADT7470ARQZ-REEL7 on WIN SOURCE
- Analog Devices Inc. Information

Optimize Your Supply Chain with WIN SOURCE Solutions

- Global Sourcing Solution
- Obsolete Management
- Cost Control Management
- Shortage Management
- Alternative Solution
- Excess Inventory Management