THE DATASHEET OF

ADM3202ARU

www.win-source.net 0086-755-83957316

Low Power, 3.3 V, RS-232 Line Drivers/Receivers

ADM3202/ADM3222/ADM1385

FEATURES

460 kbps data rate
Specified at 3.3 V
Meets EIA-232E specifications
0.1 µF charge pump capacitors
Low power shutdown (ADM3222 and ADM1385)
PDIP, SOIC_N, SOIC_W, SSOP, and TSSOP options
Upgrade for MAX3222/MAX3232 and LTC1385
ESD protection to IEC 1000-4-2 (801.2)
on RS-232 pins (ADM3202 only)
±8 kV: contact discharge
±15 kV: air gap discharge

APPLICATIONS

General-purpose RS-232 data link
Portable instruments
Printers, palmtop computers, PDAs

GENERAL DESCRIPTION

The ADM3202/ADM3222/ADM1385 transceivers are high speed, 2-channel RS-232/V.28 interface devices that operate from a single 3.3 V power supply. Low power consumption and a shutdown facility (ADM3222/ADM1385) make them ideal for battery-powered portable instruments.

The ADM3202/ADM3222/ADM1385 parts conform to the EIA-232E and CCITT V.28 specifications and operate at data rates up to 460 kbps.

Four external 0.1 µF charge pump capacitors are used for the voltage doubler/inverter, permitting operation from a single 3.3 V supply.

The ADM3222 contains additional enable and shutdown circuitry. The $\overline{EN}$ input can be used to three-state the receiver outputs. The $\overline{SD}$ input is used to power down the charge pump and transmitter outputs, reducing the quiescent current to less than 0.5 µA. The receivers remain enabled during shutdown unless disabled using $\overline{EN}$.

The ADM1385 contains a driver disable mode and a complete shutdown mode.

The ADM3202 is available in a 16-lead PDIP, SOIC_W, and SOIC_N, as well as a space-saving 16-lead TSSOP. The ADM3222 is available in 18-lead PDIP and SOIC_W and in 20-lead SSOP and TSSOP. The ADM1385 is available in a 20-lead SSOP, which is pin-compatible with the LTC1385 CG.

FUNCTIONAL BLOCK DIAGRAMS

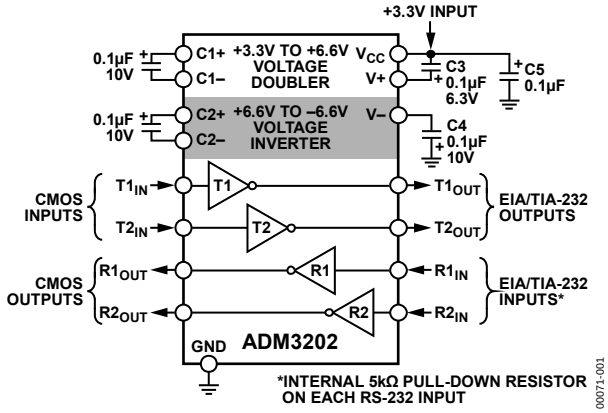

Figure 1.

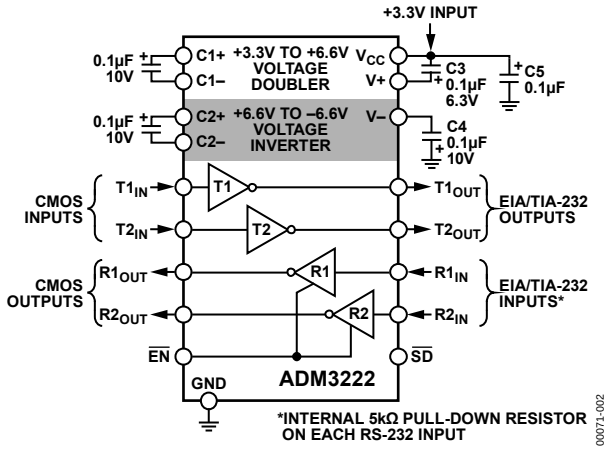

Figure 2.

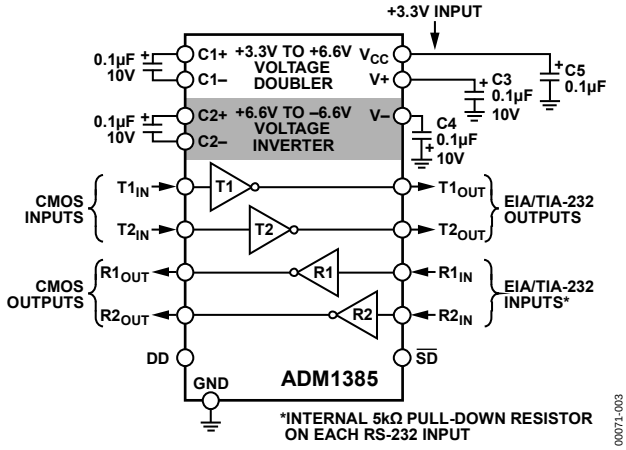

Figure 3.

Rev. E

Information furnished by Analog Devices is believed to be accurate and reliable. However, no responsibility is assumed by Analog Devices for its use, nor for any infringements of patents or other rights of third parties that may result from its use. Specifications subject to change without notice. No license is granted by implication or otherwise under any patent or patent rights of Analog Devices. Trademarks and registered trademarks are the property of their respective owners.

One Technology Way, P.O. Box 9106, Norwood, MA 02062-9106, U.S.A.
Tel: 781.329.4700 **www.analog.com**
Fax: 781.461.3113 **©1998–2011 Analog Devices, Inc. All rights reserved.**

TABLE OF CONTENTS

Features ... 1
Applications ... 1
General Description ... 1
Functional Block Diagrams ... 1
Revision History ... 2
Specifications ... 3
Absolute Maximum Ratings ... 4
ESD Caution ... 4
Pin Configurations and Function Descriptions ... 5
Pin Configurations (N, RN, RU, and RW Packages) ... 5
Pin Configurations (RS and RU Packages) ... 5
Typical Performance Characteristics ... 6
General Description ... 8
Circuit Description ... 8
High Baud Rate ... 9
Outline Dimensions ... 10
Ordering Guide ... 14

REVISION HISTORY

7/11—Rev. D to Rev. E

Changes to Figure 3 ... 1
Changes to Table 2 ... 4
Changes to Figure 17 ... 8
Updated Outline Dimensions ... 10
Changes to Ordering Guide ... 14

8/06—Rev. C to Rev. D

Changes to Table 1 ... 3
Updated Outline Dimensions ... 10
Changes to Ordering Guide ... 12

9/05—Rev. B to Rev. C

Updated Outline Dimensions ... 10
Changes to Ordering Guide ... 12

12/01—Rev. A to Rev. B

Changes to Specifications Page ... 2

SPECIFICATIONS

V_{CC} = 3.3 V ± 0.3 V, C1 to C4 = 0.1 µF. All specifications T_{MIN} to T_{MAX}, unless otherwise noted.

Table 1.

Parameter	Min	Typ	Max	Unit	Test Conditions/Comments
DC CHARACTERISTICS					
Operating Voltage Range	3.0	3.3	5.5	V	
V_{CC} Power Supply Current		1.3	3	mA	No load
		8	12	mA	R_L = 3 kΩ to GND
Shutdown Supply Current		0.01	0.5	µA	
LOGIC					
Input Logic Threshold Low, V_{INL}			0.8	V	T_{IN}
Input Logic Threshold High, V_{INH}	2.0			V	T_{IN}
CMOS Output Voltage Low, V_{OL}			0.4	V	I_{OUT} = 1.6 mA
CMOS Output Voltage High, V_{OH}	V_{CC} − 0.6			V	I_{OUT} = −1 mA
Logic Pull-Up Current		5	10	µA	T_{IN} = GND to V_{CC}[1]
Output Leakage Current			±10	µA	Receivers disabled
RS-232 RECEIVER					
EIA-232 Input Voltage Range	−30		+30	V	
EIA-232 Input Threshold Low	0.6	1.2		V	
EIA-232 Input Threshold High		1.6	2.4	V	
EIA-232 Input Hysteresis		0.4		V	
EIA-232 Input Resistance	3	5	7	kΩ	
RS-232 TRANSMITTER					
Output Voltage Swing (RS-232)	±5.0	±5.2		V	V_{CC} = 3.3 V, all transmitter outputs loaded with 3 kΩ to ground
Output Voltage Swing (RS-562)	±3.7			V	V_{CC} = 3.0 V
Transmitter Output Resistance	300			Ω	V_{CC} = 0 V, V_{OUT} = ±2 V
RS-232 Output Short-Circuit Current		±15		mA	
Output Leakage Current			±25	µA	$\overline{SD}$ = low, V_{OUT} = 12 V
TIMING CHARACTERISTICS					
Maximum Data Rate	460			kbps	V_{CC} = 3.3 V, R_L = 3 kΩ to 7 kΩ, C_L = 50 pF to 1000 pF, one Tx switching
Receiver Propagation Delay					
TPHL		0.4	1	µs	
TPLH		0.4	1	µs	
Transmitter Propagation Delay		0.3	1.2	µs	R_L = 3 kΩ, C_L = 1000 pF
Receiver Output Enable Time		200		ns	
Receiver Output Disable Time		200		ns	
Transmitter Skew		30		ns	
Receiver Skew		300		ns	
Transition Region Slew Rate	5.5	10	30	V/µs	Measured from +3 V to −3 V or −3 V to +3 V, V_{CC} = +3.3 V; R_L = 3 kΩ, C_L = 1000 pF, T_A = 25°C

[1] ADM1385: Input leakage current typically −10 µA when T_{IN} = GND.

ABSOLUTE MAXIMUM RATINGS

T_A = 25°C, unless otherwise noted.

Table 2.

Parameter	Rating
V_{CC}	−0.3 V to +6 V
V+	(V_{CC} − 0.3 V) to +14 V
V−	+0.3 V to −14 V
Input Voltages	
T_{IN}	−0.3 V to (V+, +0.3 V)
R_{IN}	±30 V
Output Voltages	
T_{OUT}	±15 V
R_{OUT}	−0.3 V to (V_{CC} + 0.3 V)
Short-Circuit Duration	
T_{OUT}	Continuous
Power Dissipation (Derates 6 mW/°C above 50°C)	450 mW
Thermal Impedance, θ_{JA}	
N-16/N-18 (2-Layer Test Board)	117°C/W
RW-16/RW-18 (4-Layer Test Board)	56°C/W
R-16 (4-Layer Test Board)	81°C/W
RU-16 (4-Layer Test Board)	113°C/W
RU-20 (4-Layer Test Board)	110°C/W
RS-20 (4-Layer Test Board)	83°C/W
Operating Temperature Range	
Industrial (A Version)	−40°C to +85°C
Storage Temperature Range	−65°C to +150°C
Lead Temperature (Soldering, 10 sec)	JEDEC industry standard J-STD-020

Stresses above those listed under Absolute Maximum Ratings may cause permanent damage to the device. This is a stress rating only; functional operation of the device at these or any other conditions above those indicated in the operational section of this specification is not implied. Exposure to absolute maximum rating conditions for extended periods may affect device reliability.

ESD CAUTION

ESD (electrostatic discharge) sensitive device. Charged devices and circuit boards can discharge without detection. Although this product features patented or proprietary protection circuitry, damage may occur on devices subjected to high energy ESD. Therefore, proper ESD precautions should be taken to avoid performance degradation or loss of functionality.

PIN CONFIGURATIONS AND FUNCTION DESCRIPTIONS

PIN CONFIGURATIONS (N, R, RU, AND RW PACKAGES)

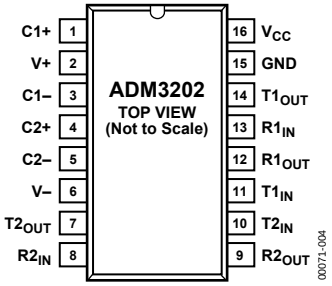

Figure 4. N, R, RU, and RW Packages Pin Configuration

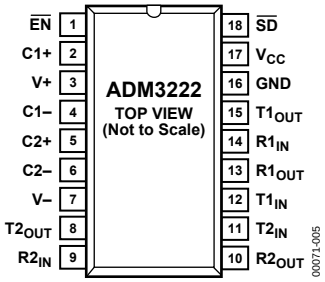

Figure 5. N and RW Packages Pin Configuration

PIN CONFIGURATIONS (RS AND RU PACKAGES)

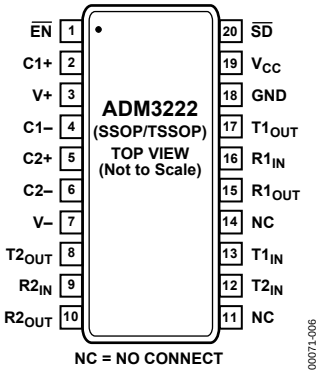

Figure 6. RS and RU Packages Pin Configuration

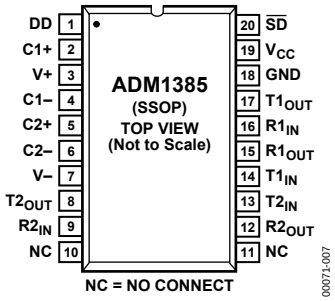

Figure 7. RS Package Pin Configuration

Table 3. Pin Function Descriptions

Mnemonic	Description
V_{CC}	Power Supply Input (3.3 V ± 0.3 V).
V+	Internally Generated Positive Supply (+6 V nominal).
V–	Internally Generated Negative Supply (–6 V nominal).
GND	Ground Pin. Must be connected to 0 V.
C1+, C1–	External Capacitor 1 is connected between these pins. A 0.1 µF capacitor is recommended but larger capacitors up to 47 µF can be used.
C2+, C2–	External Capacitor 2 is connected between these pins. A 0.1 µF capacitor is recommended but larger capacitors up to 47 µF can be used.
Tx_{IN}	Transmitter (Driver) Inputs. These inputs accept TTL/CMOS levels.
Tx_{OUT}	Transmitter (Driver) Outputs. These are RS-232 signal levels (typically ±9 V).
Rx_{IN}	Receiver Inputs. These inputs accept RS-232 signal levels. An internal 5 kΩ pull-down resistor to GND is connected on each input.
Rx_{OUT}	Receiver Outputs. These are CMOS output logic levels.
$\overline{EN}$	(ADM3222 only) Receiver Enable. Active low. When low, the receiver outputs are enabled. When high, they are three-stated.
$\overline{SD}$	(ADM3222 only) Shutdown Control. Active low. When low, the charge pump is shut down and the transmitter outputs are disabled.
$\overline{SD}$	(ADM1385 only) Shutdown Control. When low, the charge pump is shut down and all transmitters and receivers are disabled.
DD	(ADM1385 only) Driver Disable. When low, the charge pump is turned off and the transmitters are disabled. The receivers remain active.
NC	No Connect.

TYPICAL PERFORMANCE CHARACTERISTICS

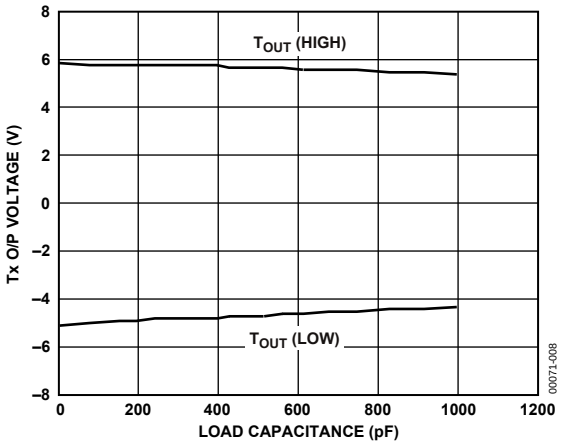

Figure 8. Transmitter Output Voltage High/Low vs. Load Capacitance @ 460 kbps

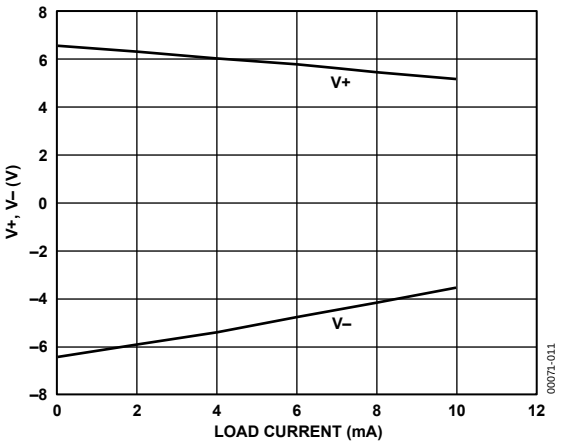

Figure 11. Charge Pump V+, V– vs. Load Current

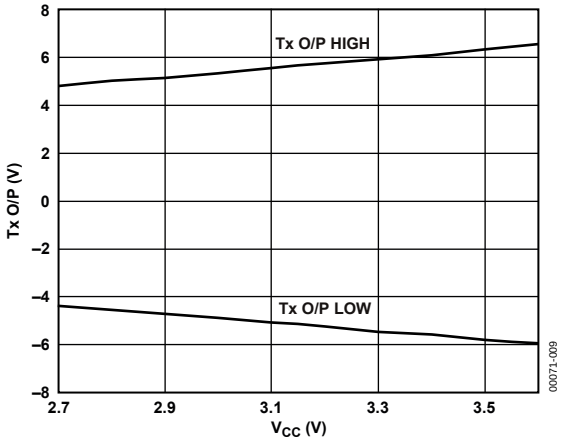

Figure 9. Transmitter Output Voltage vs. V_{CC}

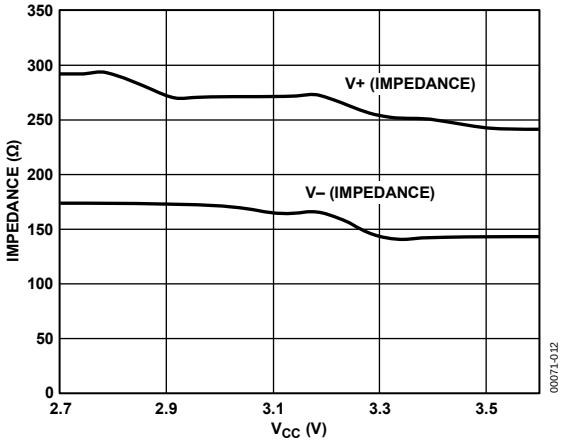

Figure 12. Charge Pump Impedance vs. V_{CC}

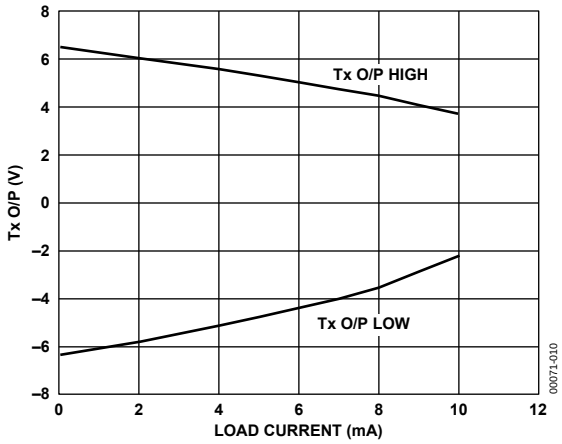

Figure 10. Transmitter Output Voltage Low/High vs. Load Current

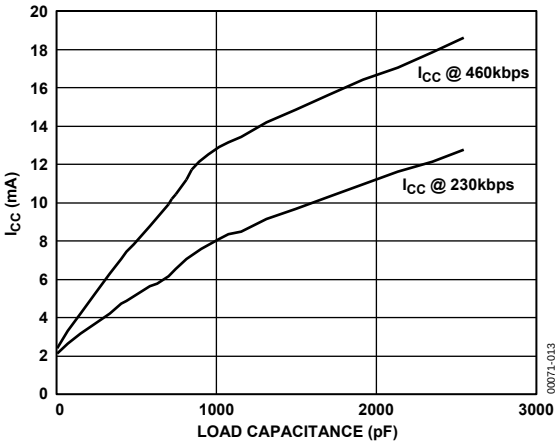

Figure 13. Power Supply Current vs. Load Capacitance

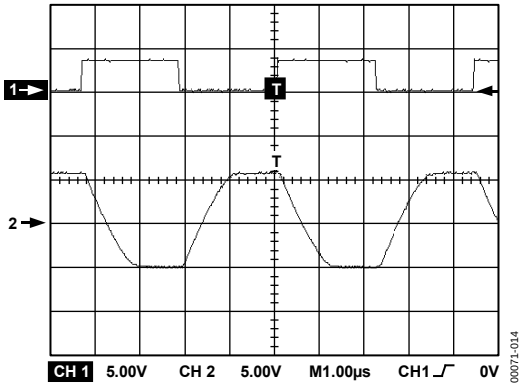

Figure 14. 460 kbps Data Transmission

GENERAL DESCRIPTION

The ADM3202/ADM3222/ADM1385 are RS-232 line drivers/receivers. Step-up voltage converters coupled with level-shifting transmitters and receivers allow RS-232 levels to be developed while operating from a single 3.3 V supply.

CMOS technology is used to keep the power dissipation to an absolute minimum, allowing maximum battery life in portable applications.

The ADM3202/ADM3222/ADM1385 are modifications, enhancements, and improvements of the AD230 to AD241 family and derivatives. They are essentially plug-in compatible and do not have any materially different applications.

CIRCUIT DESCRIPTION

The internal circuitry consists of these main sections:

- A charge pump voltage converter
- 3.3 V logic to EIA-232 transmitters
- EIA-232 to 5 V logic receivers

Charge Pump DC to DC Voltage Converter

The charge pump voltage converter consists of a 200 kHz oscillator and a switching matrix. The converter generates a ±6.6 V supply from the input 3.3 V level. This is done in two stages by using a switched capacitor technique as illustrated in Figure 18 and Figure 19. First, the 3.3 V input supply is doubled to 6.6 V by using Capacitor C1 as the charge storage element. The +6.6 V level is then inverted to generate −6.6 V using C2 as the storage element. C3 is shown connected between V+ and V_{CC} but is equally effective if connected between V+ and GND.

Capacitors C3 and C4 are used to reduce the output ripple. Their values are not critical and can be increased, if desired. Capacitor C3 is shown connected between V+ and V_{CC}. It is also acceptable to connect this capacitor between V+ and GND.

If desired, larger capacitors (up to 10 μF) can be used for Capacitors C1 to C4.

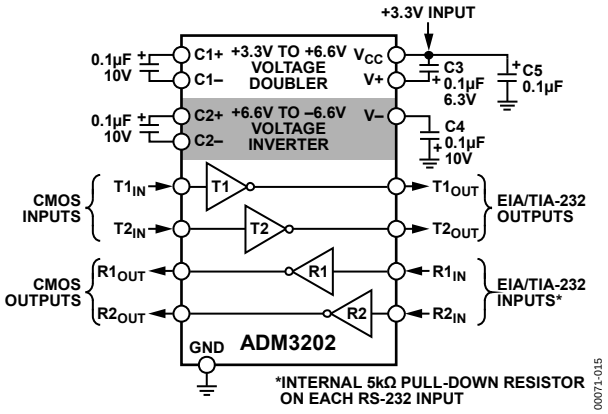

Figure 15. ADM3202 Typical Operating Circuit

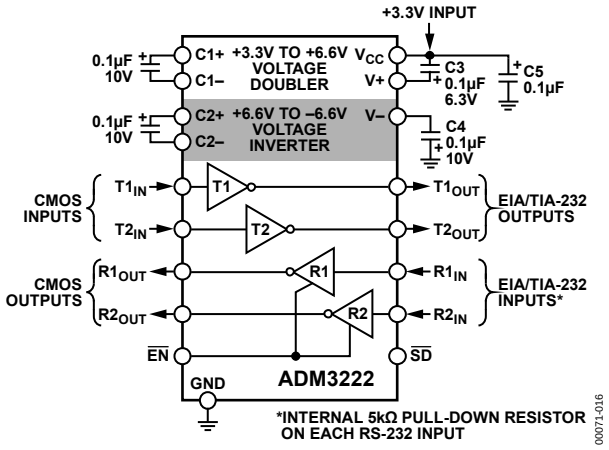

Figure 16. ADM3222 Typical Operating Circuit

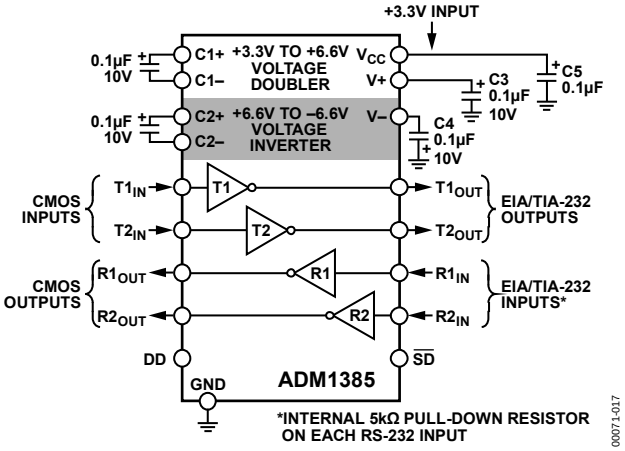

Figure 17. ADM1385 Typical Operating Circuit

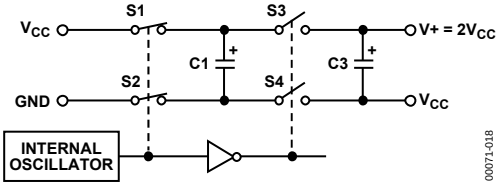

Figure 18. Charge Pump Voltage Doubler

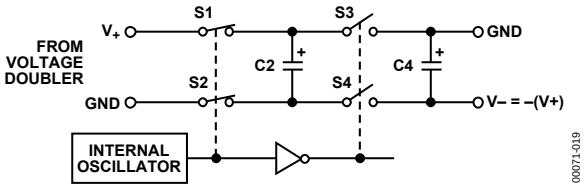

Figure 19. Charge Pump Voltage Inverter

Transmitter (Driver) Section

The drivers convert 3.3 V logic input levels into RS-232 output levels. With V_{CC} = 3.3 V and driving an RS-232 load, the output voltage swing is typically ±6 V.

Receiver Section

The receivers are inverting level-shifters that accept RS-232 input levels and translate them into 3 V logic output levels. The inputs have internal 5 kΩ, pull-down resistors to ground and are protected against overvoltages up to ±30 V. Unconnected inputs are pulled to 0 V by the internal 5 kΩ, pull-down resistor. This results in a Logic 1 output level for unconnected inputs or for inputs connected to GND.

The receivers have Schmitt-trigger inputs with a hysteresis level of 0.4 V. This ensures error-free reception for both noisy inputs and for inputs with slow transition times.

HIGH BAUD RATE

The ADM3202/ADM3222 feature high slew rates permitting data transmission at rates well in excess of the EIA/RS-232E specifications. RS-232 voltage levels are maintained at data rates up to 460 kbps even under worst-case loading conditions. This allows high speed data links between two terminals and is suitable for the new generation ISDN modem standards that require data rates of 230 kbps. The slew rate is internally controlled to less than 30 V/μs to minimize EMI interference.

OUTLINE DIMENSIONS

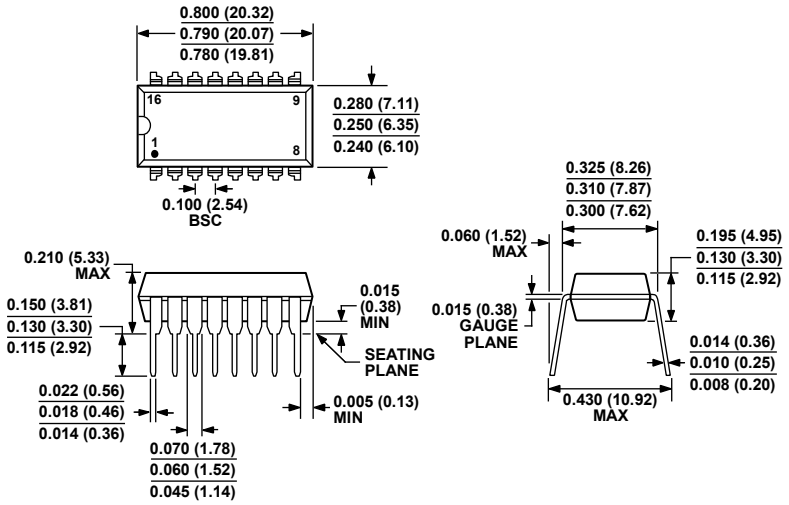

COMPLIANT TO JEDEC STANDARDS MS-001-AB

CONTROLLING DIMENSIONS ARE IN INCHES; MILLIMETER DIMENSIONS (IN PARENTHESES) ARE ROUNDED-OFF INCH EQUIVALENTS FOR REFERENCE ONLY AND ARE NOT APPROPRIATE FOR USE IN DESIGN. CORNER LEADS MAY BE CONFIGURED AS WHOLE OR HALF LEADS.

073106-B

Figure 20. 16-Lead Plastic Dual In-Line Package [PDIP]
Narrow Body
(N-16)
Dimensions shown in inches and (millimeters)

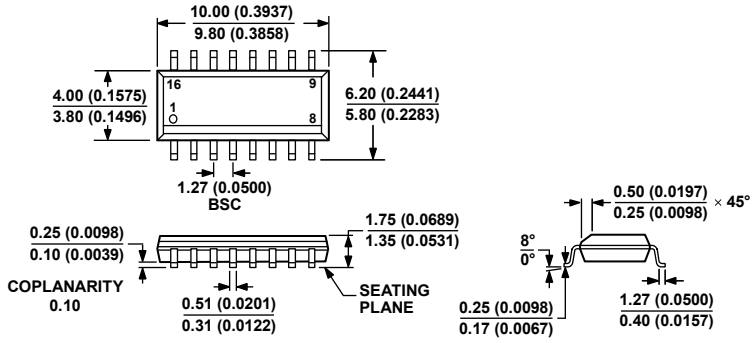

COMPLIANT TO JEDEC STANDARDS MS-012-AC

CONTROLLING DIMENSIONS ARE IN MILLIMETERS; INCH DIMENSIONS (IN PARENTHESES) ARE ROUNDED-OFF MILLIMETER EQUIVALENTS FOR REFERENCE ONLY AND ARE NOT APPROPRIATE FOR USE IN DESIGN.

060606-A

Figure 21. 16-Lead Standard Small Outline Package [SOIC_N]
Narrow Body
(R-16)
Dimensions shown in millimeters and (inches)

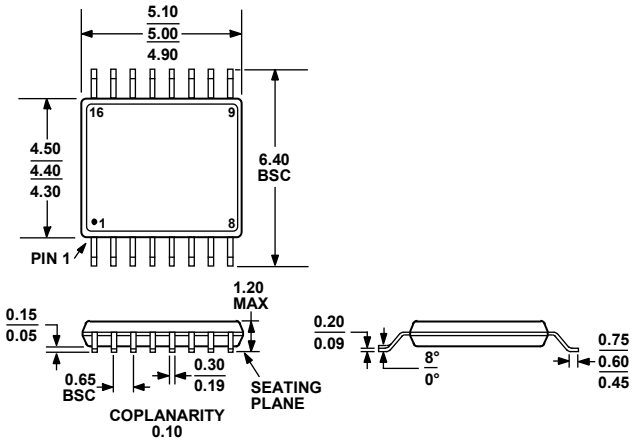

COMPLIANT TO JEDEC STANDARDS MO-153-AB

Figure 22. 16-Lead Thin Shrink Small Outline Package [TSSOP]
(RU-16)
Dimensions shown in millimeters

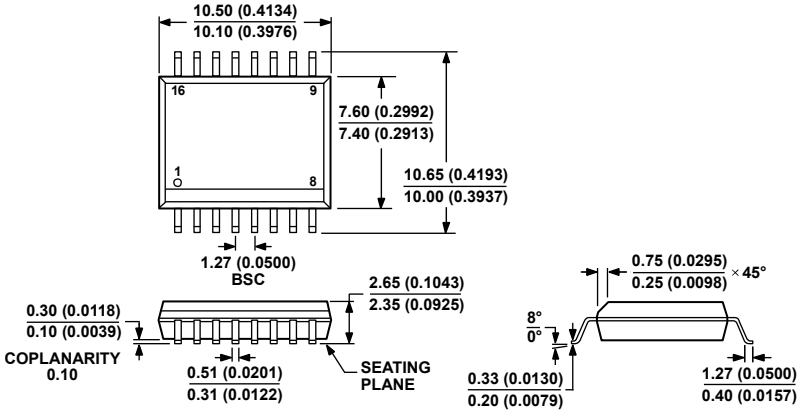

COMPLIANT TO JEDEC STANDARDS MS-013-AA
CONTROLLING DIMENSIONS ARE IN MILLIMETERS; INCH DIMENSIONS
(IN PARENTHESES) ARE ROUNDED-OFF MILLIMETER EQUIVALENTS FOR
REFERENCE ONLY AND ARE NOT APPROPRIATE FOR USE IN DESIGN.

03-27-2007-B

Figure 23. 16-Lead Standard Small Outline Package [SOIC_W]
Wide Body
(RW-16)
Dimensions shown in millimeters and (inches)

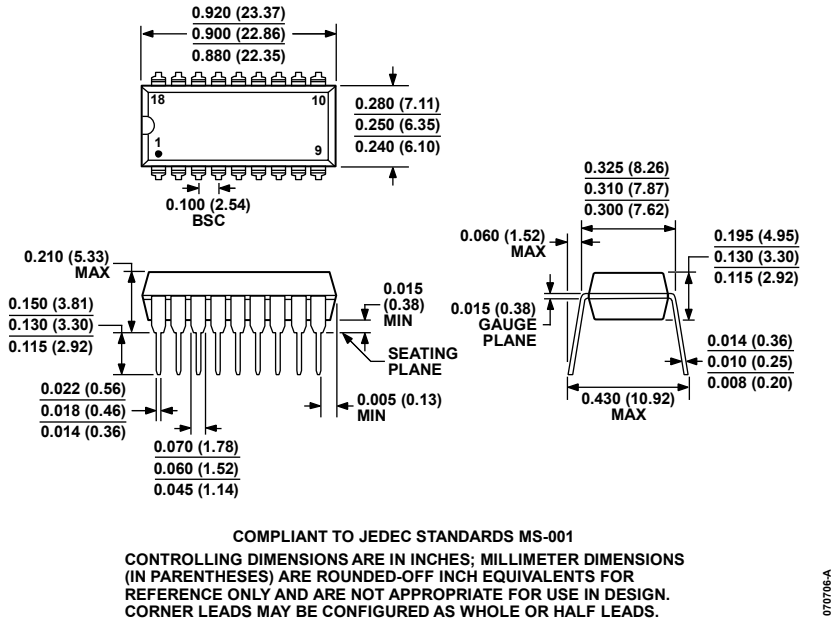

Figure 24. 18-Lead Plastic Dual In-Line Package [PDIP]
Narrow Body
(N-18)
Dimensions shown in inches and (millimeters)

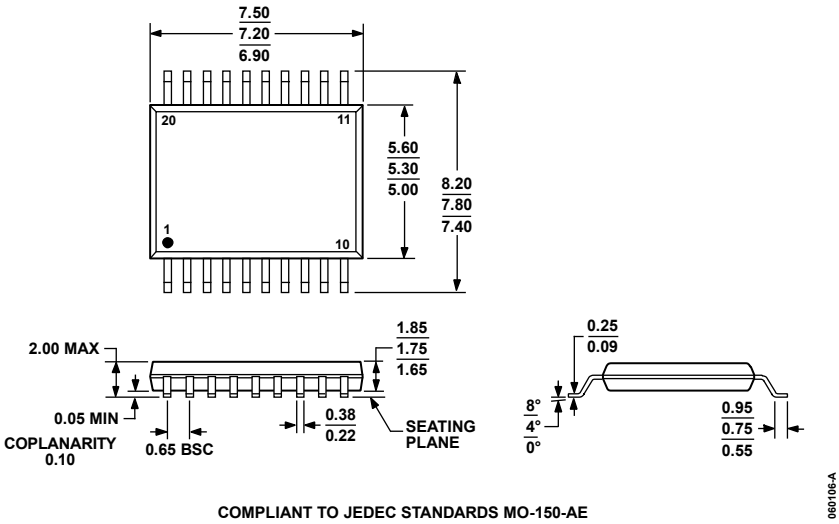

Figure 25. 20-Lead Shrink Small Outline Package [SSOP]
(RS-20)
Dimensions shown in millimeters

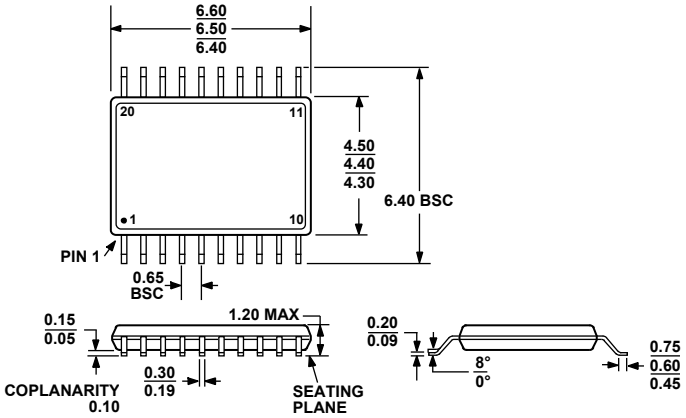

COMPLIANT TO JEDEC STANDARDS MO-153-AC

Figure 26. 20-Lead Thin Shrink Small Outline Package [TSSOP]
(RU-20)
Dimensions shown in millimeters

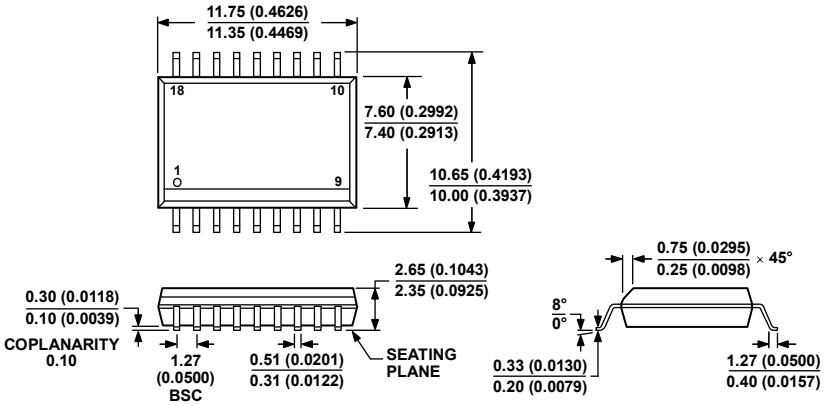

COMPLIANT TO JEDEC STANDARDS MS-013-AB
CONTROLLING DIMENSIONS ARE IN MILLIMETERS; INCH DIMENSIONS (IN PARENTHESES) ARE ROUNDED-OFF MILLIMETER EQUIVALENTS FOR REFERENCE ONLY AND ARE NOT APPROPRIATE FOR USE IN DESIGN.

060706-A

Figure 27. 18-Lead Standard Small Outline Package [SOIC_W]
Wide Body
(RW-18)
Dimensions shown in millimeters and (inches)

ORDERING GUIDE

Model[1]	Temperature Range	Package Description	Package Option
ADM3202AN	−40°C to +85°C	16-Lead Plastic Dual In-Line Package [PDIP]	N-16
ADM3202ANZ	−40°C to +85°C	16-Lead Plastic Dual In-Line Package [PDIP]	N-16
ADM3202ARN	−40°C to +85°C	16-Lead Standard Small Outline Package [SOIC_N]	R-16
ADM3202ARN-REEL	−40°C to +85°C	16-Lead Standard Small Outline Package [SOIC_N]	R-16
ADM3202ARN-REEL7	−40°C to +85°C	16-Lead Standard Small Outline Package [SOIC_N]	R-16
ADM3202ARNZ	−40°C to +85°C	16-Lead Standard Small Outline Package [SOIC_N]	R-16
ADM3202ARNZ-REEL	−40°C to +85°C	16-Lead Standard Small Outline Package [SOIC_N]	R-16
ADM3202ARNZ-REEL7	−40°C to +85°C	16-Lead Standard Small Outline Package [SOIC_N]	R-16
ADM3202ARU	−40°C to +85°C	16-Lead Thin Shrink Small Outline Package [TSSOP]	RU-16
ADM3202ARU-REEL	−40°C to +85°C	16-Lead Thin Shrink Small Outline Package [TSSOP]	RU-16
ADM3202ARU-REEL7	−40°C to +85°C	16-Lead Thin Shrink Small Outline Package [TSSOP]	RU-16
ADM3202ARUZ	−40°C to +85°C	16-Lead Thin Shrink Small Outline Package [TSSOP]	RU-16
ADM3202ARUZ-REEL	−40°C to +85°C	16-Lead Thin Shrink Small Outline Package [TSSOP]	RU-16
ADM3202ARUZ-REEL7	−40°C to +85°C	16-Lead Thin Shrink Small Outline Package [TSSOP]	RU-16
ADM3202ARW	−40°C to +85°C	16-Lead Standard Small Outline Package [SOIC_W]	RW-16
ADM3202ARW-REEL7	−40°C to +85°C	16-Lead Standard Small Outline Package [SOIC_W]	RW-16
ADM3202ARWZ	−40°C to +85°C	16-Lead Standard Small Outline Package [SOIC_W]	RW-16
ADM3202ARWZ-REEL	−40°C to +85°C	16-Lead Standard Small Outline Package [SOIC_W]	RW-16
ADM3202ARWZ-REEL7	−40°C to +85°C	16-Lead Standard Small Outline Package [SOIC_W]	RW-16
ADM3222AN	−40°C to +85°C	18-Lead Plastic Dual In-Line Package [PDIP]	N-18
ADM3222ANZ	−40°C to +85°C	18-Lead Plastic Dual In-Line Package [PDIP]	N-18
ADM3222ARS	−40°C to +85°C	20-Lead Shrink Small Outline Package [SSOP]	RS-20
ADM3222ARS-REEL	−40°C to +85°C	20-Lead Shrink Small Outline Package [SSOP]	RS-20
ADM3222ARS-REEL7	−40°C to +85°C	20-Lead Shrink Small Outline Package [SSOP]	RS-20
ADM3222ARSZ	−40°C to +85°C	20-Lead Shrink Small Outline Package [SSOP]	RS-20
ADM3222ARSZ-REEL	−40°C to +85°C	20-Lead Shrink Small Outline Package [SSOP]	RS-20
ADM3222ARSZ-REEL7	−40°C to +85°C	20-Lead Shrink Small Outline Package [SSOP]	RS-20
ADM3222ARU	−40°C to +85°C	20-Lead Thin Shrink Small Outline Package [TSSOP]	RU-20
ADM3222ARU-REEL	−40°C to +85°C	20-Lead Thin Shrink Small Outline Package [TSSOP]	RU-20
ADM3222ARU-REEL7	−40°C to +85°C	20-Lead Thin Shrink Small Outline Package [TSSOP]	RU-20
ADM3222ARUZ	−40°C to +85°C	20-Lead Thin Shrink Small Outline Package [TSSOP]	RU-20
ADM3222ARUZ-REEL	−40°C to +85°C	20-Lead Thin Shrink Small Outline Package [TSSOP]	RU-20
ADM3222ARUZ-REEL7	−40°C to +85°C	20-Lead Thin Shrink Small Outline Package [TSSOP]	RU-20
ADM3222ARW	−40°C to +85°C	18-Lead Standard Small Outline Package [SOIC_W]	RW-18
ADM3222ARW-REEL	−40°C to +85°C	18-Lead Standard Small Outline Package [SOIC_W]	RW-18
ADM3222ARWZ	−40°C to +85°C	18-Lead Standard Small Outline Package [SOIC_W]	RW-18
ADM3222ARWZ-REEL	−40°C to +85°C	18-Lead Standard Small Outline Package [SOIC_W]	RW-18
ADM3222ARWZ-REEL7	−40°C to +85°C	18-Lead Standard Small Outline Package [SOIC_W]	RW-18
ADM1385ARS	−40°C to +85°C	20-Lead Shrink Small Outline Package [SSOP]	RS-20
ADM1385ARSZ	−40°C to +85°C	20-Lead Shrink Small Outline Package [SSOP]	RS-20
ADM1385ARSZ-REEL	−40°C to +85°C	20-Lead Shrink Small Outline Package [SSOP]	RS-20
ADM1385ARSZ-REEL7	−40°C to +85°C	20-Lead Shrink Small Outline Package [SSOP]	RS-20

[1] Z = RoHS Compliant Part.

NOTES

NOTES

©1998–2011 Analog Devices, Inc. All rights reserved. Trademarks and registered trademarks are the property of their respective owners.
D00071-0-7/11(E)

Looking for pricing, stock, or lifecycle information?

Click below to explore more details on WIN SOURCE:

- View ADM3202ARU on WIN SOURCE
- Analog Devices Inc. Information

Optimize Your Supply Chain with WIN SOURCE Solutions

- Global Sourcing Solution
- Obsolete Management
- Cost Control Management
- Shortage Management
- Alternative Solution
- Excess Inventory Management