WINSOURCE ELECTRONICS

THE DATASHEET OF

5569262-1

www.win-source.net 0086-755-83957316

LOC	DIST
AA	22

REVISIONS

P	LTR	DESCRIPTION	DATE	DWN	APVD
	B3	REVISED PER ECO-15-011392	06AUG2015	LL	SH

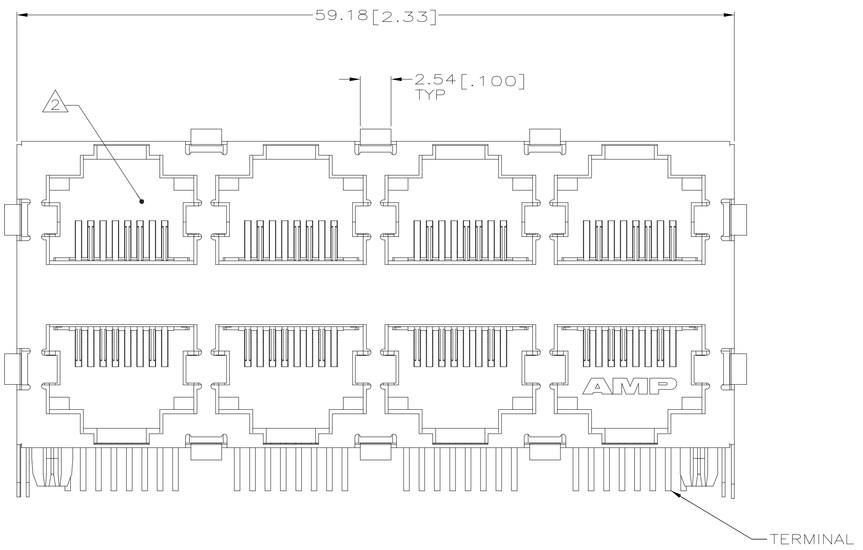

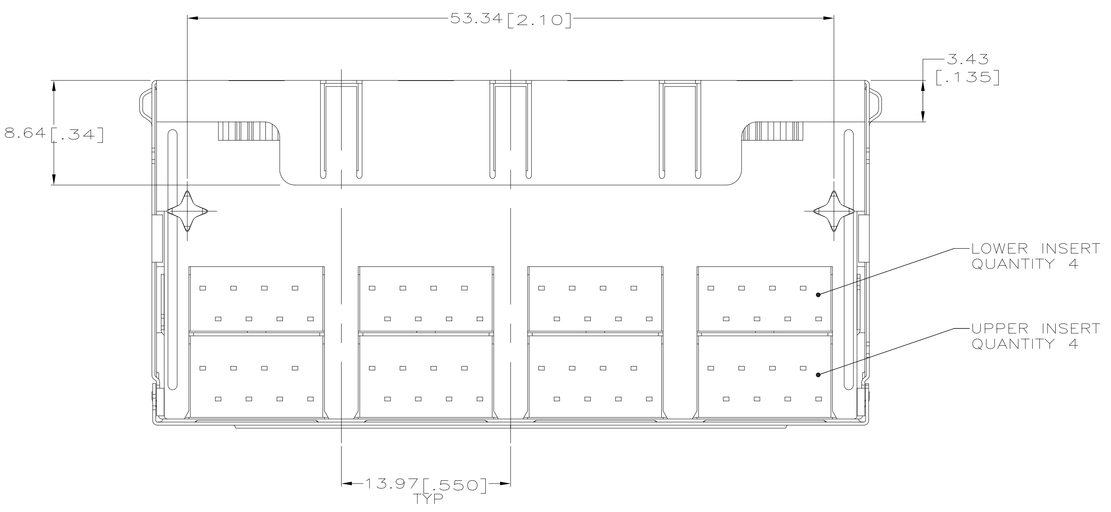

1. MATERIAL:
HOUSING – PCT POLYESTER, BLACK, UL94V-0.
OVERMOLDED TERMINAL ARRAY – PBT, BROWN.
TERMINALS – 0.33 [.013] THICK PHOS BRONZE PLATED WITH 1.27um [.000050] MIN THICK HARD GOLD IN LOCALIZED AREA AND 3.81um [.000150] MIN THICK MATTE TIN IN SOLDER AREA OVER 1.27um [.000050] MIN THICK NICKEL UNDERPLATE.
SHIELD – 0.25 [.010] THICK COPPER ALLOY PLATED WITH 2.03um [.000080] MIN BRIGHT TIN OVER 1.27um [.000050] MIN NICKEL

2. JACK CAVITY CONFORMS TO FCC RULES AND REGULATIONS, PART 68 SUBPART F.

3. DATE CODE LOCATED ON REAR OF PART APPROXIMATELY AS SHOWN:
FIRST 2 DIGITS ARE LAST 2 DIGITS OF YEAR,
SECOND 2 DIGITS ARE MANUFACTURING WORK WEEK,
LAST DIGIT IS DAY OF WEEK, WITH SUNDAY = 1.

4. MATERIAL:
HOUSING – PCT POLYESTER, BLACK, UL94V-0.
OVERMOLDED TERMINAL ARRAY – PBT, BROWN.
TERMINALS – 0.33 [.013] THICK PHOS BRONZE PLATED WITH 1.27um [.000050] MIN THICK HARD GOLD IN LOCALIZED AREA AND 3.81um [.000150] MIN THICK MATTE TIN IN SOLDER AREA OVER 1.27um [.000050] MIN THICK NICKEL UNDERPLATE.
SHIELDS – 0.25 [.010] THICK COPPER ALLOY PLATED WITH 1.27 um [.000050] MINMUM NICKEL AND 2.03 um [.000080] MINIMUM HOT TIN DIP ON PCB GROUND TABS.

5. MATERIAL:
HOUSING – PCT POLYESTER, BLACK, UL94V-0.
OVERMOLDED TERMINAL ARRAY – PBT, BROWN.
TERMINALS – 0.33 [.013] THICK PHOS BRONZE PLATED WITH 0.381um [.000015] MIN THICK HARD GOLD IN LOCALIZED AREA AND 3.81um [.000150] MIN THICK MATTE TIN IN SOLDER AREA OVER 1.27um [.000050] MIN THICK NICKEL UNDERPLATE.
SHIELDS – 0.25 [.010] THICK COPPER ALLOY PLATED WITH 1.27 um [.000050] MINMUM NICKEL AND 2.03 um [.000080] MINIMUM HOT TIN DIP ON PCB GROUND TABS.

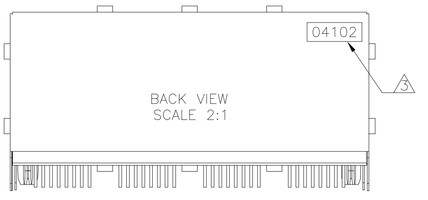

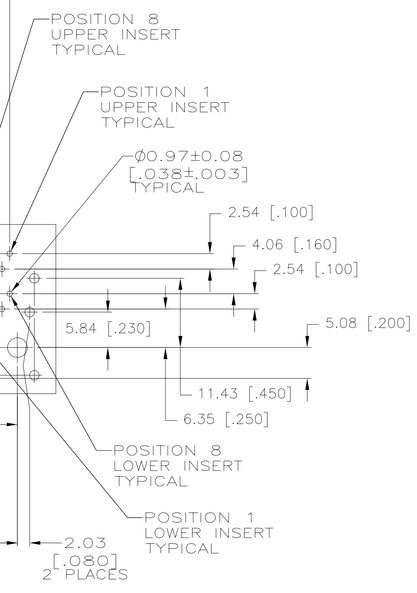

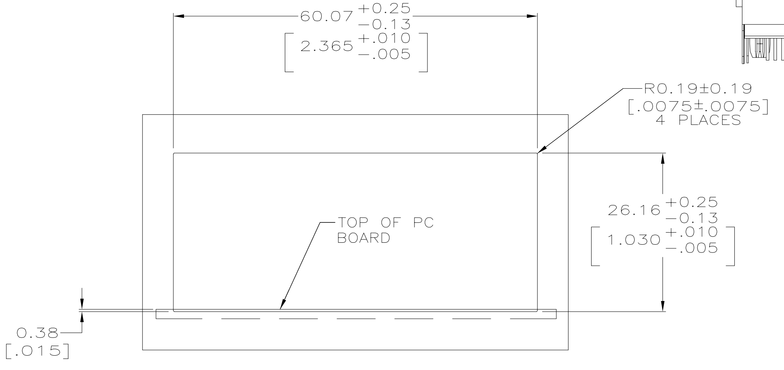

SUGGESTED PANEL CUTOUT DIMENSIONS
SCALE 2:1

5	3.56[.140]	4.06[.160]	5569262-2
1	3.05[.120]	4.06[.160]	1-5569262-1
4	3.56[.140]	4.06[.160]	5569262-1
REMARK	DIM. Z	DIM. Y	PART NUMBER

THIS DRAWING IS A CONTROLLED DOCUMENT.

DIMENSIONS: mm [INCHES]

TOLERANCES UNLESS OTHERWISE SPECIFIED:
0 PLC ± –
1 PLC ± –
2 PLC ± 0.25[.01]
3 PLC ± 0.13[.005]
4 PLC ± –
ANGLES ± –

MATERIAL SEE NOTE 1
FINISH SEE NOTE 1

DWN T. SPRINKLE/L.A.MAYER 17APR2005
CHK J.WESTMAN 17APR2005
APVD S.FLICKINGER 17APR2005
PRODUCT SPEC 108-1163-2
APPLICATION SPEC 114-2048
WEIGHT –

TE Connectivity

NAME
STACKED MODULAR JACK ASSEMBLY,
2x4 PORT, 8 POSITION, SHIELDED,
PANEL GROUND, CATEGORY 5

SIZE A1 | CAGE CODE 00779 | DRAWING NO C-5569262 | RESTRICTED TO –

CUSTOMER DRAWING | SCALE 4:1 | SHEET 1 OF 1 | REV B3

Looking for pricing, stock, or lifecycle information?

Click below to explore more details on WIN SOURCE:

- View 5569262-1 on WIN SOURCE
- TE Connectivity Information

Optimize Your Supply Chain with WIN SOURCE Solutions

- Global Sourcing Solution
- Obsolete Management
- Cost Control Management
- Shortage Management
- Alternative Solution
- Excess Inventory Management