THE DATASHEET OF

280373-2

www.win-source.net 0086-755-83957316

SCALA NON IMPEGNATIVA (DO NOT SCALE)
DIMENSIONI IN (DIMENSIONS IN) mm

METRIC

PROIEZIONE EUROPEA (EUROPEAN PROJECTION)

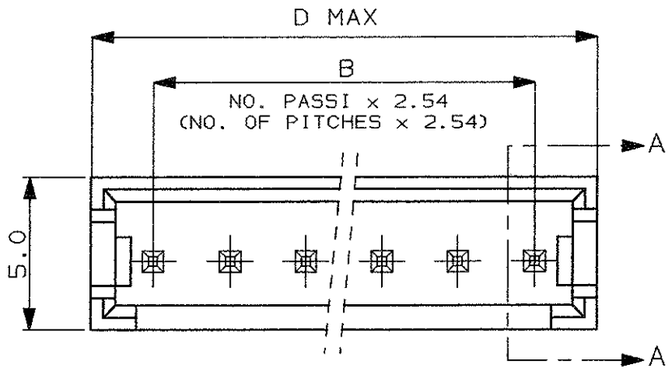

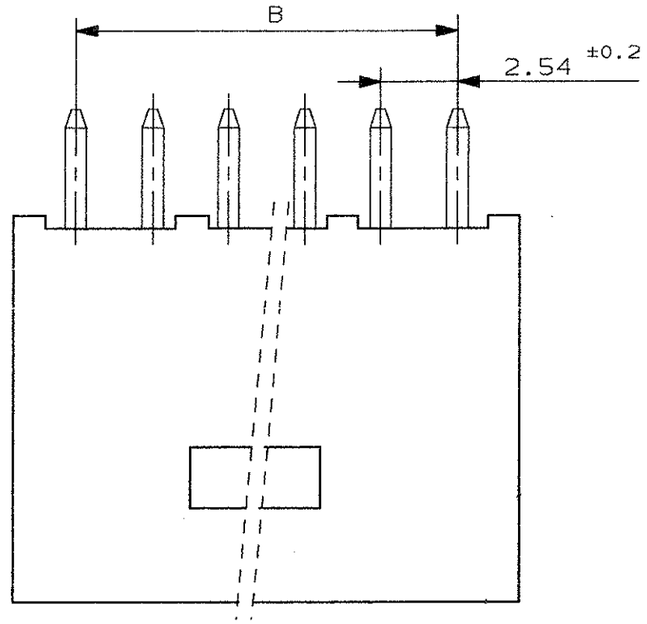

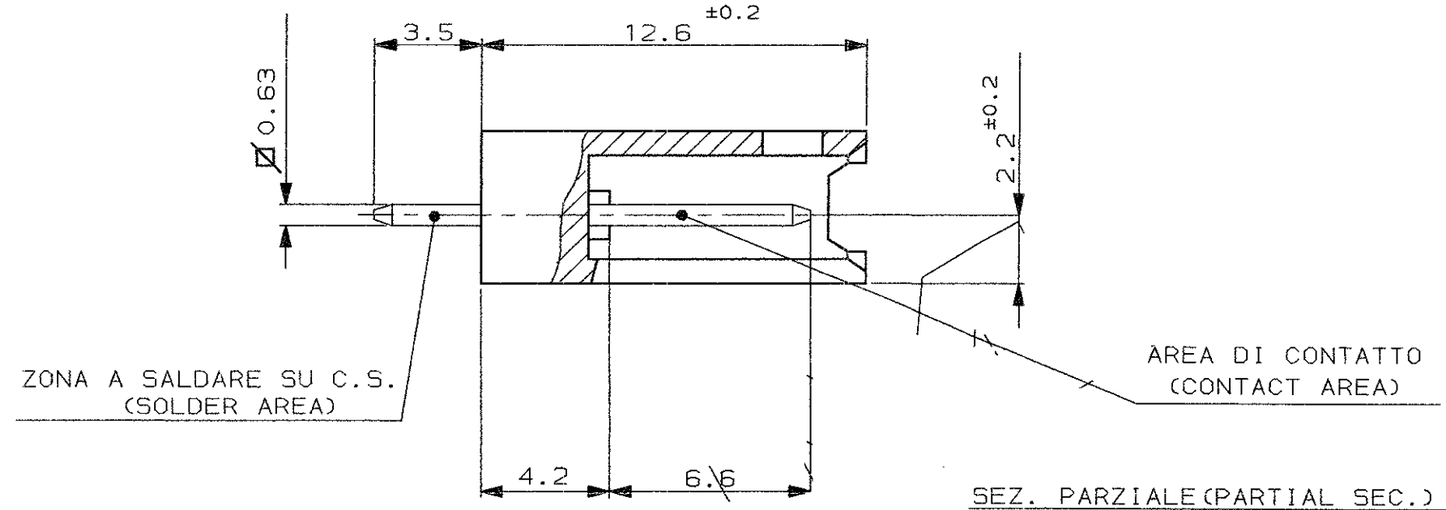

SEZ. PARZIALE (PARTIAL SEC.) A-A

D	B	NUMERO (PART NUMBER) 3	NUMERO (PART NUMBER) 2	NUMERO (PART NUMBER) 1	NO. POS.
58.5	53.34	280376-3	~~280376-2~~ 6	280376-1	22
40.7	35.56	280375-3	280375-2	280375-1	15
33.1	27.94	280520-3	280520-2	280520-1	12
28.0	22.86	280374-3	280374-2	280374-1	10
25.4	20.32	~~280508-3~~ 5	280508-2	280508-1	9
22.9	17.78	~~280373-3~~ 6	280373-2	280373-1	8
17.8	12,70	280372-3	280372-2	280372-1	6
12.7	7.62	280371-3	280371-2	280371-1	4
7.7	2.54	280370-3	280370-2	280370-1	2

1 FINITURA (FINISH): STAGNATO 3.5µm (TIN PLATED 3.5µm).

2 FINITURA (FINISH): DORATO 0.4µm NELL'AREA DI CONTATTO E STAGNATO 2.5µm NELLA ZONA A SALDARE, SU 1.3µm DI NI. (DUPLEX PLATED 0.4µm GOLD IN CONTACT AREA AND 2.5µm TIN IN SOLDER AREA, OVER 1.3µm NICKEL).

3 FINITURA (FINISH): DORATO 0.8µm NELL'AREA DI CONTATTO E STAGNATO 2.5µm NELLA ZONA A SALDARE, SU 1.3µm DI NI. (DUPLEX PLATED 0.8µm GOLD IN CONTACT AREA AND 2.5µm TIN IN SOLDER AREA, OVER 1.3µm NICKEL).

4 MATERIALI (MATERIALS):
- BLOCCHETTI: POLIESTERE AUTOESTINGUENTE UL94V-0, COLORE NERO. (HOUSINGS: FLAME RETARDANT THERMOPLASTIC, COLOR BLACK).
- CONTATTI STAGNATI: BRONZO FOSFOROSO. (TIN PLATED CONTACTS: PHOSPHOR BRONZE).
- CONTATTI DORATI: OTTONE. (GOLD PLATED CONTACTS: BRASS).

5 P/N OBSOLETO (OBSOLETE P/N)

6 OBSOLETE

REV	REVISIONI (REVISION RECORD)	DIS. (DR)	DATA (DATE)
L2	ECR-10-022530	KK	10FEB11
L1	MODIFIED PER ET00-0263-98		29-9 '98
L	OBSOLETED P/N 280503-3 (ET00-518-96)	C.P.	4-12 '96
K	AGGIORNATO E RIDISEGNATO (REVISED & REDRAWN)	G.C.	2/90

CUSTOMER DRAWING FOR REFERENCE ONLY

DISEGNO PER CLIENTE SOLO PER RIFERIMENTO

THIS DRAWING IS UNPUBLISHED | RELEASE FOR PUBLICATION 19

© COPYRIGHT 19 BY TE INCORPORATED, HARRISBURG, PA. ALL INTERNATIONAL RIGHT RESERVED. TE PRODUCTS MAY BE COVERED BY U.S. AND FOREIGN PATENT AND/OR PATENT PENDING

TOLLERANZE, SE NON DIVERSAMENTE SPECIFICATO (TOLERANCES, UNLESS OTHERWISE SPECIFIED): ± 0.3

ANGOLI (ANGLES): ± 2°

MATERIALI (MATERIALS): VEDERE NOTA (SEE NOTE) 4

SCALA (SCALE): 5:1

TE Connectivity

DIS. (DR.): G. CAMPIA 12 FEB 90

CONT. (CHK): _

APP. (APP.): _

DESCRIZIONE (DESCRIPTION): AMPMODU II HEADER ASS. IES, STRAIGHT, SINGLE ROW

LOC.	SIZE	NUMERO (DWG NO)	REV.	FOGLIO (SHEET)
I	A3	C- 280370	L2	1 DI (OF) 1

DISTRIBUZIONE (PRINT DIST.)

Looking for pricing, stock, or lifecycle information?

Click below to explore more details on WIN SOURCE:

- View 280373-2 on WIN SOURCE
- TE Connectivity Information

Optimize Your Supply Chain with WIN SOURCE Solutions

- Global Sourcing Solution
- Obsolete Management
- Cost Control Management
- Shortage Management
- Alternative Solution
- Excess Inventory Management