3.3V 32-175Mbps AnyRate®
CLOCK AND DATA RECOVERY

Use lower-power SY87700AL for new designs

SY87700L

FEATURES

- **Industrial temperature range (–40°C to +85°C)**
- **3.3V power supply**
- **SONET/SDH/ATM compatible**
- **Clock and data recovery from 32Mbps up to 175Mbps NRZ data stream, clock generation from 32Mbps to 175Mbps**
- **Two on-chip PLLs: one for clock generation and another for clock recovery**
- **Selectable reference frequencies**
- **Differential PECL high-speed serial I/O**
- **Line receiver input: no external buffering needed**
- **Link Fault indication**
- **100k ECL compatible I/O**
- **Complies with Bellcore, ITU/CCITT and ANSI specifications for applications such as OC-1 and OC-3 as well as proprietary applications**
- **Available in 32-pin EPAD-TQFP and 28-pin SOIC packages (28-pin SOIC is available, but is not recommended for new designs.)**

DESCRIPTION

The SY87700L is a complete Clock Recovery and Data Retiming integrated circuit for data rates from 32Mbps up to 175Mbps NRZ. The device is ideally suited for SONET/SDH/ATM applications and other high-speed data transmission systems.

Clock recovery and data retiming is performed by synchronizing the on-chip VCO directly to the incoming data stream. The VCO center frequency is controlled by the reference clock frequency and the selected divide ratio. On-chip clock generation is performed through the use of a frequency multiplier PLL with a byte rate source as reference.

The SY87700L also includes a link fault detection circuit.

All support documentation can be found on Micrel's web site at: www.micrel.com.

APPLICATIONS

- **SONET/SDH/ATM OC-1 and OC-3**
- **Fast Ethernet, SMPTE 259**
- **Proprietary architecture up to 175Mbps**

BLOCK DIAGRAM

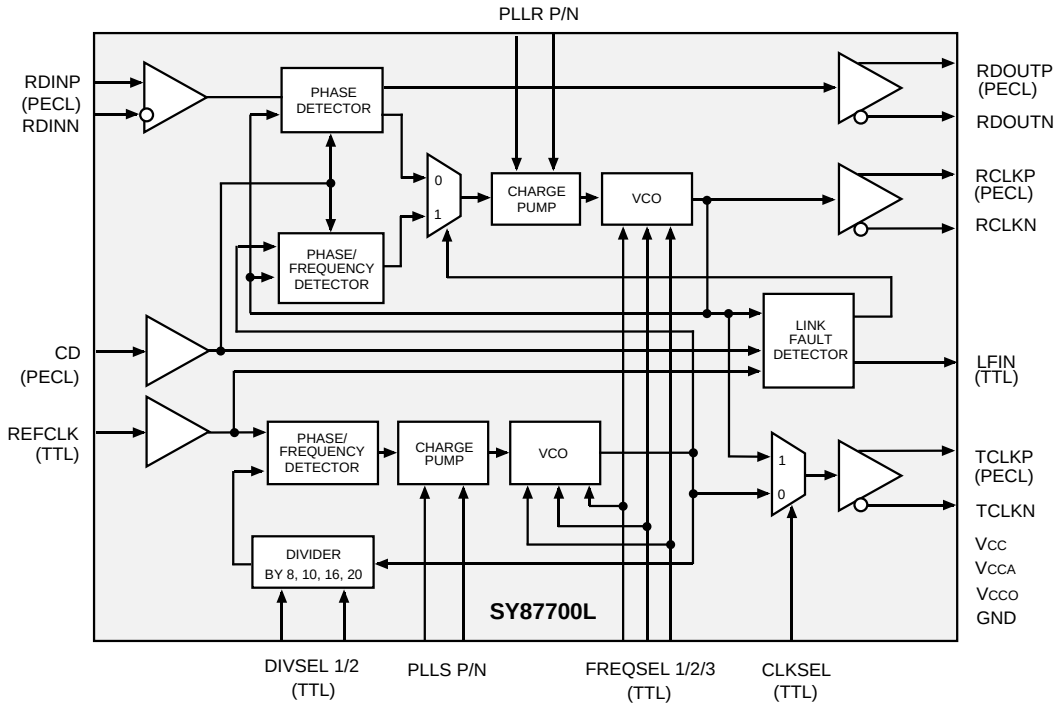

AnyRate is a registered trademark of Micrel, Inc.

PACKAGE/ORDERING INFORMATION

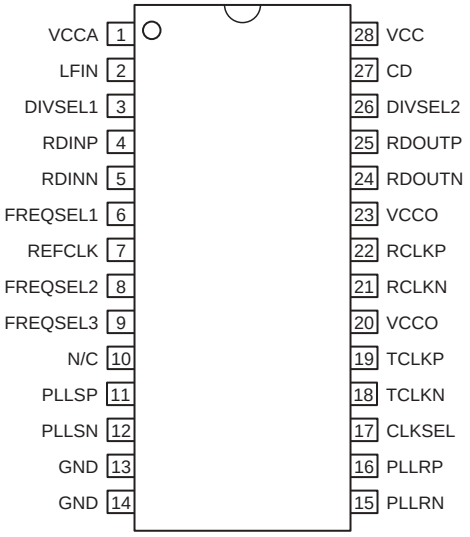

28-Pin SOIC (Z28-1)

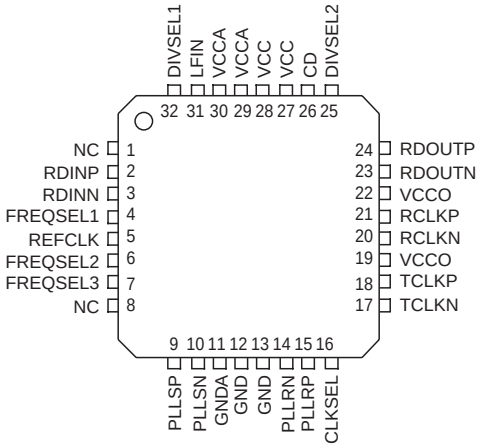

32-Pin EPAD TQFP (H32-1)

Ordering Information[1]

Part Number	Package Type	Operating Range	Package Marking	Lead Finish
SY87700LZI	Z28-1	Industrial	SY87700LZI	Sn-Pb
SY87700LZITR[2]	Z28-1	Industrial	SY87700LZI	Sn-Pb
SY87700LHI	H32-1	Industrial	SY87700LHI	Sn-Pb
SY87700LHITR[2]	H32-1	Industrial	SY87700LHI	Sn-Pb
SY87700LZG[3]	Z28-1	Industrial	SY87700LZG with Pb-Free bar line indicator	NiPdAu Pb-Free
SY87700LZGTR[2, 3]	Z28-1	Industrial	SY87700LZG with Pb-Free bar line indicator	NiPdAu Pb-Free
SY87700LHG	H32-1	Industrial	SY87700LHG with Pb-Free bar line indicator	NiPdAu Pb-Free
SY87700LHGTR[2, 3]	H32-1	Industrial	SY87700LHG with Pb-Free bar line indicator	NiPdAu Pb-Free

Notes:

1. Contact factory for die availability. Dice are guaranteed at T_A = 25°C, DC Electricals only.
2. Tape and Reel.
3. Pb-Free package is recommended for new designs.

PIN DESCRIPTIONS

Pin Number SOIC	Pin Number TQFP	Pin Name	Pin Function
4 5	2 3	RDINP, RDINN	Serial Data Input (Differential PECL): These built-in line receiver inputs are connected to the differential receive serial data stream. An internal receive PLL recovers the embedded clock (RCLK) and data (RDOUT) information. The incoming data rate can be within one of five frequency ranges depending on the state of the FREQSEL pins. See “Frequency Selection” table.
7	5	REFCLK	Reference Clock (TTL Inputs): This input is used as the reference for the internal frequency synthesizer and the “training” frequency for the receiver PLL to keep it centered in the absence of data coming in on the RDIN inputs.
27	26	CD	Carrier Detect (PECL Input): This input controls the recovery function of the Receive PLL and can be driven by the carrier detect output of optical modules or from external transition detection circuitry. When this input is HIGH the input data stream (RDIN) is recovered normally by the Receive PLL. When this input is LOW the data on the inputs RDIN will be internally forced to a constant LOW, the data outputs RDOUT will remain LOW, the Link Fault Indicator output LFIN forced LOW and the clock recovery PLL forced to look onto the clock frequency generated from REFCLK.
6 8 9	4 6 7	FREQSEL1, FREQSEL2, FREQSEL3	Frequency Select (TTL Inputs): These inputs select the output clock frequency range as shown in the “Frequency Selection” table.
3 26	32 25	DIVSEL1, DIVSEL2	Divider Select (TTL Inputs): These inputs select the ratio between the output clock frequency (RCLK/TCLK) and the REFCLK input frequency as shown in the “Reference Frequency Selection” table.
17	16	CLKSEL	Clock Select (TTL Inputs): This input is used to select either the recovered clock of the receiver PLL (CLKSEL = HIGH) or the clock of the frequency synthesizer (CLKSEL = LOW) to the TCLK outputs.
2	31	LFIN	Link Fault Indicator (TTL Output): This output indicates the status of the input data stream RDIN. Active HIGH signal is indicating when the internal clock recovery PLL has locked onto the incoming data stream. LFIN will go HIGH if CD is HIGH and RDIN is within the frequency range of the Receive PLL (1000ppm). LFIN is an asynchronous output.
25 24	24 23	RDOUTP, RDOUTN	Receive Data Output (Differential PECL): These ECL 100k outputs represent the recovered data from the input data stream (RDIN). This recovered data is specified against the rising edge of RCLK.
22 21	21 20	RCLKP, RCLKN	Clock Output (Differential PECL): These ECL 100k outputs represent the recovered clock used to sample the recovered data (RDOUT).
19 18	18 17	TCLKP, TCLKN	Clock Output (Differential PECL): These ECL 100k outputs represent either the recovered clock (CLKSEL = HIGH) used to sample the recovered data (RDOUT) or the transmit clock of the frequency synthesizer (CLKSEL = LOW).
11 12	9 10	PLLSP, PLLSN	Clock Synthesis PLL Loop Filter. External loop filter pins for the clock synthesis PLL.
16 15	15 14	PLLRP, PLLRN	Clock Recovery PLL Loop Filter. External loop filter pins for the receiver PLL.
	27, 28,	V_{CC}	Supply Voltage(1)
1	29, 30	V_{CCA}	Analog Supply Voltage(1)
20, 23	19, 22	V_{CCO}	Output Supply Voltage(1)
13, 14	12, 13	GND	Ground
10	1, 8	NC	No Connect

Note:

1. V_{CC}, V_{CCA}, V_{CCO} must be the same value.

FUNCTIONAL DESCRIPTION

Clock Recovery

Clock Recovery, as shown in the block diagram generates a clock that is at the same frequency as the incoming data bit rate at the Serial Data input. The clock is phase aligned by a PLL so that it samples the data in the center of the data eye pattern.

The phase relationship between the edge transitions of the data and those of the generated clock are compared by a phase/frequency detector. Output pulses from the detector indicate the required direction of phase correction. These pulses are smoothed by an integral loop filter. The output of the loop filter controls the frequency of the Voltage Controlled Oscillator (VCO), which generates the recovered clock.

Frequency stability without incoming data is guaranteed by an alternate reference input (REFCLK) that the PLL locks onto when data is lost. If the Frequency of the incoming signal varies by greater than approximately 1000ppm with respect to the synthesizer frequency, the PLL will be declared out of lock, and the PLL will lock to the reference clock.

The loop filter transfer function is optimized to enable the PLL to track the jitter, yet tolerate the minimum transition density expected in a received SONET data signal. This transfer function yields a 30µs data stream of continuous 1's or 0's for random incoming NRZ data.

The total loop dynamics of the clock recovery PLL provides jitter tolerance which is better than the specified tolerance in GR-253-CORE.

Lock Detect

The SY87700L contains a link fault indication circuit which monitors the integrity of the serial data inputs. If the received serial data fails the frequency test, the PLL will be forced to lock to the local reference clock. This will maintain the correct frequency of the recovered clock output under loss of signal or loss of lock conditions. If the recovered clock frequency deviates from the local reference clock frequency by more than approximately 1000ppm, the PLL will be declared out of lock. The lock detect circuit will poll the input data stream in an attempt to reacquire lock to data. If the recovered clock frequency is determined to be within approximately 1000ppm, the PLL will be declared in lock and the lock detect output will go active.

CHARACTERISTICS

Performance

The SY87700L PLL complies with the jitter specifications proposed for SONET/SDH equipment defined by the Bellcore Specifications: GR-253-CORE, Issue 2, December 1995 and ITU-T Recommendations: G.958 document, when used with differential inputs and outputs.

Input Jitter Tolerance

Input jitter tolerance is defined as the peak-to-peak amplitude of sinusoidal jitter applied on the input signal that causes an equivalent 1dB optical/electrical power penalty. SONET input jitter tolerance requirement condition is the input jitter amplitude which causes an equivalent of 1dB power penalty.

Jitter Transfer

Jitter transfer function is defined as the ratio of jitter on the output OC-N/STS-N signal to the jitter applied on the input OC-N/STS-N signal versus frequency. Jitter transfer requirements are shown in Figure 2.

Jitter Generation

The jitter of the serial clock and serial data outputs shall not exceed .01 U.I. rms when a serial data input with no jitter is presented to the serial data inputs.

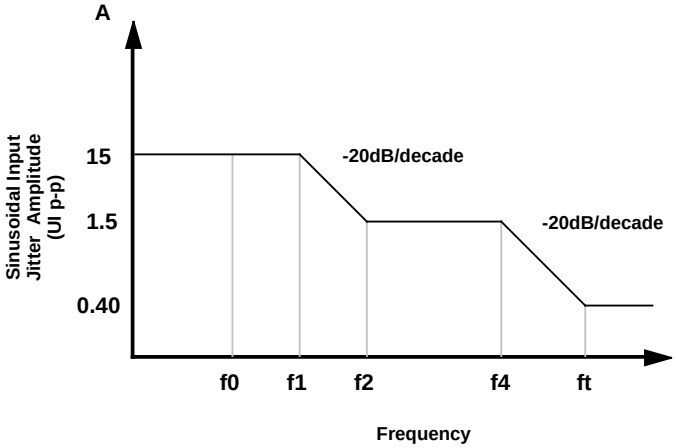

OC/STS-N Level	f0 (Hz)	f1 (Hz)	f2 (Hz)	f3 (kHz)	ft (kHz)
3	10	30	300	6.5	65

Figure 1. Input Jitter Tolerance

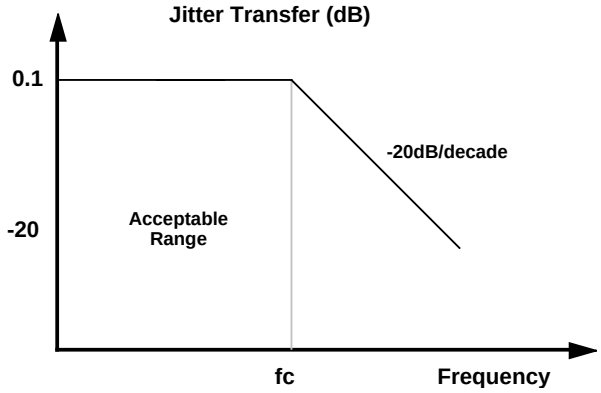

OC/STS-N Level	fc (kHz)	P (dB)
3	130	0.1

Figure 2. Jitter Transfer

FREQUENCY SELECTION TABLE

FREQSEL1	FREQSEL2	FREQSEL3	f_{VCO}/f_{RCLK}	f_{RCLK} Data Rates (Mbps)
0	1	1	6	125 - 175
1	0	0	8	94 - 157
1	0	1	12	63 - 104
1	1	0	16	47 - 78
1	1	1	24	32 - 52
0	1	0	—	undefined
0	0	X(2)	—	undefined

Notes:

1. SY87700L operates from 32-175MHz. For higher speed applications, the SY87701L operates from 32MHz to 1250MHz.
2. X is a DON'T CARE.

REFERENCE FREQUENCY SELECTION

DIVSEL1	DIVSEL2	f_{RCLK}/f_{REFCLK}
0	0	8
0	1	10
1	0	16
1	1	20

LOOP FILTER COMPONENTS(1)

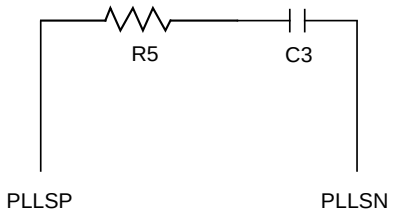

Wide Range
R5 = 350Ω
C3 = 1.0µF (X7R Dielectric)

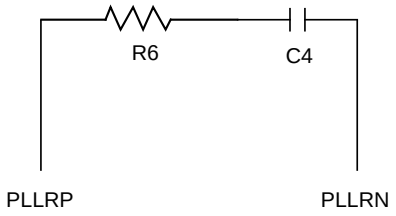

Wide Range
R6 = 680Ω
C4 = 1.0µF (X7R Dielectric)

Note:

1. Suggested Values. Values may vary for different applications.

Absolute Maximum Ratings[1]

Supply Voltage (V_{CC}) ..... –0.5V to +4.0V
Input Voltage (V_{IN}) ..... –0.5V to V_{CC}
Output Current (I_{OUT})
  Continuous 50mA
  Surge 100mA
Lead Temperature (soldering, 20 sec.) ..... 260°C
Storage Temperature (T_S) ..... –65°C to +150°C

Operating Ratings[2]

Supply Voltage (V_{CC}) ..... +3.15V to +3.45V
Ambient Temperature (T_A) ..... –40°C to +85°C
Package Thermal Resistance[3]
  SOIC (θ_{JA})[4] ..... 80°C/W
  EPAD TQFP (θ_{JA})[5]
    0lfpm airflow ..... 27.6°C/W
    200lfpm airflow ..... 22.6°C/W
    500lfpm airflow ..... 20.7°C/W

DC ELECTRICAL CHARACTERISTICS

Symbol	Parameter	Condition	Min	Typ	Max	Units
V_{CC}	Power Supply Voltage		3.15	3.3	3.45	V
I_{CC}	Power Supply Current			170	230	mA

PECL 100K DC ELECTRICAL CHARACTERISTICS

$V_{CC} = V_{CCO} = V_{CCA} = 3.3V \pm 5\%$; $T_A = –40°C$ to +85°C; unless noted.

Symbol	Parameter	Condition	Min	Typ	Max	Units
V_{IH}	Input HIGH Voltage		V_{CC} –1.165	—	V_{CC} –0.880	V
V_{IL}	Input LOW Voltage		V_{CC} –1.810	—	V_{CC} –1.475	V
V_{OH}	Output HIGH Voltage	50Ω to V_{CC} –2V	V_{CC} –1.075	—	V_{CC} –0.830	V
V_{OL}	Output LOW Voltage	50Ω to V_{CC} –2V	V_{CC} –1.860	—	V_{CC} –1.570	V
I_{IL}	Input LOW Current	$V_{IN} = V_{IL}$(min)	0.5	—	—	μA

TTL DC ELECTRICAL CHARACTERISTICS

$V_{CC} = V_{CCO} = V_{CCA} = 3.3V \pm 5\%$; $T_A = –40°C$ to +85°C; unless noted.

Symbol	Parameter	Condition	Min	Typ	Max	Units
V_{IH}	Input HIGH Voltage		2.0	—	V_{CC}	V
V_{IL}	Input LOW Voltage		—	—	0.8	V
V_{OH}	Output HIGH Voltage	I_{OH} = –0.4mA	2.0	—	—	V
V_{OL}	Output LOW Voltage	I_{OL} = 4mA	—	—	0.5	V
I_{IH}	Input HIGH Current	V_{IN} = 2.7V, V_{CC} = max. $V_{IN} = V_{CC}$, V_{CC} = max.	–125 —	— —	— +100	μA μA
I_{IL}	Input LOW Current	V_{IN} = 0.5V, V_{CC} = max.	–300	—	—	μA
I_{OS}	Output Short Circuit Current	V_{OUT} = 0V (maximum 1 sec)	–15	—	–100	mA

Notes:

1. Permanent device damage may occur if “Absolute Maximum Ratings” are exceeded. This is a stress rating only and functional operation is not implied at conditions other than those detailed in the operational sections of this data sheet. Exposure to “Absolute Maximum Ratings” conditions for extended periods may affect device reliability.
2. The data sheet limits are not guaranteed if the device is operated beyond the operating ratings.
3. Airflow of 500lfpm recommended for 28-pin SOIC.
4. 28-pin SOIC package is NOT recommended for new designs.
5. Using JEDEC standard test boards with die attach pad soldered to PCB. See www.amkor.com for additional package details.

AC ELECTRICAL CHARACTERISTICS

$V_{CC} = V_{CCO} = V_{CCA} = 3.3V \pm 5\%$; $T_A = -40°C$ to $+85°C$; unless noted.

Symbol	Parameter	Condition	Min	Typ	Max	Units
f_{VCO}	VCO Center Frequency	$f_{REFCLK} \times$ Byte Rate	750	—	1250	MHz
Δf_{VCO}	VCO Center Frequency Tolerance	Nominal	—	5	—	%
t_{ACQ}	Acquisition Lock Time		—	—	15	µs
t_{CPWH}	REFCLK Pulse Width HIGH		4	—	—	ns
t_{CPWL}	REFCLK Pulse Width LOW		4	—	—	ns
t_{ir}	REFCLK Input Rise Time		—	0.5	2	ns
t_{ODC}	Output Duty Cycle (RCLK/TCLK)		45	—	55	% of UI
t_r, t_f	ECL Output Rise/Fall Time (20% to 80%)	50Ω to V_{CC} –2V	100	—	500	ps
t_{SKEW}	Recovered Clock Skew		–200	—	+200	ps
t_{DV}	Data Valid		$1/(2 \times f_{RCLK}) - 200$	—	—	ps
t_{DH}	Data Hold		$1/(2 \times f_{RCLK}) - 200$	—	—	ps

TIMING WAVEFORMS

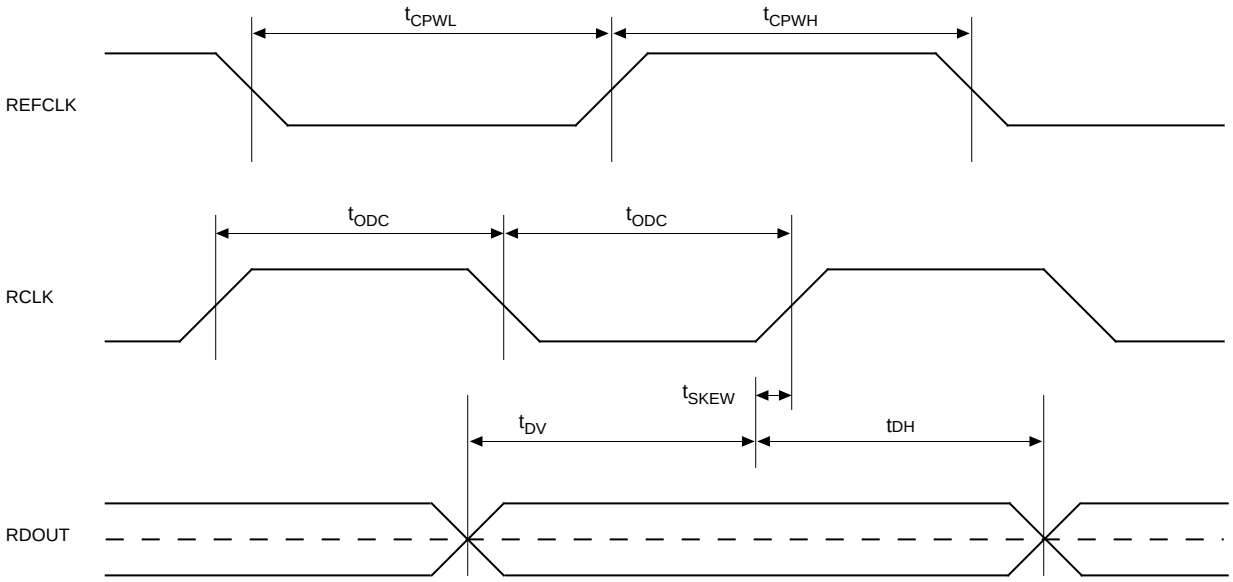

32-PIN APPLICATION EXAMPLE

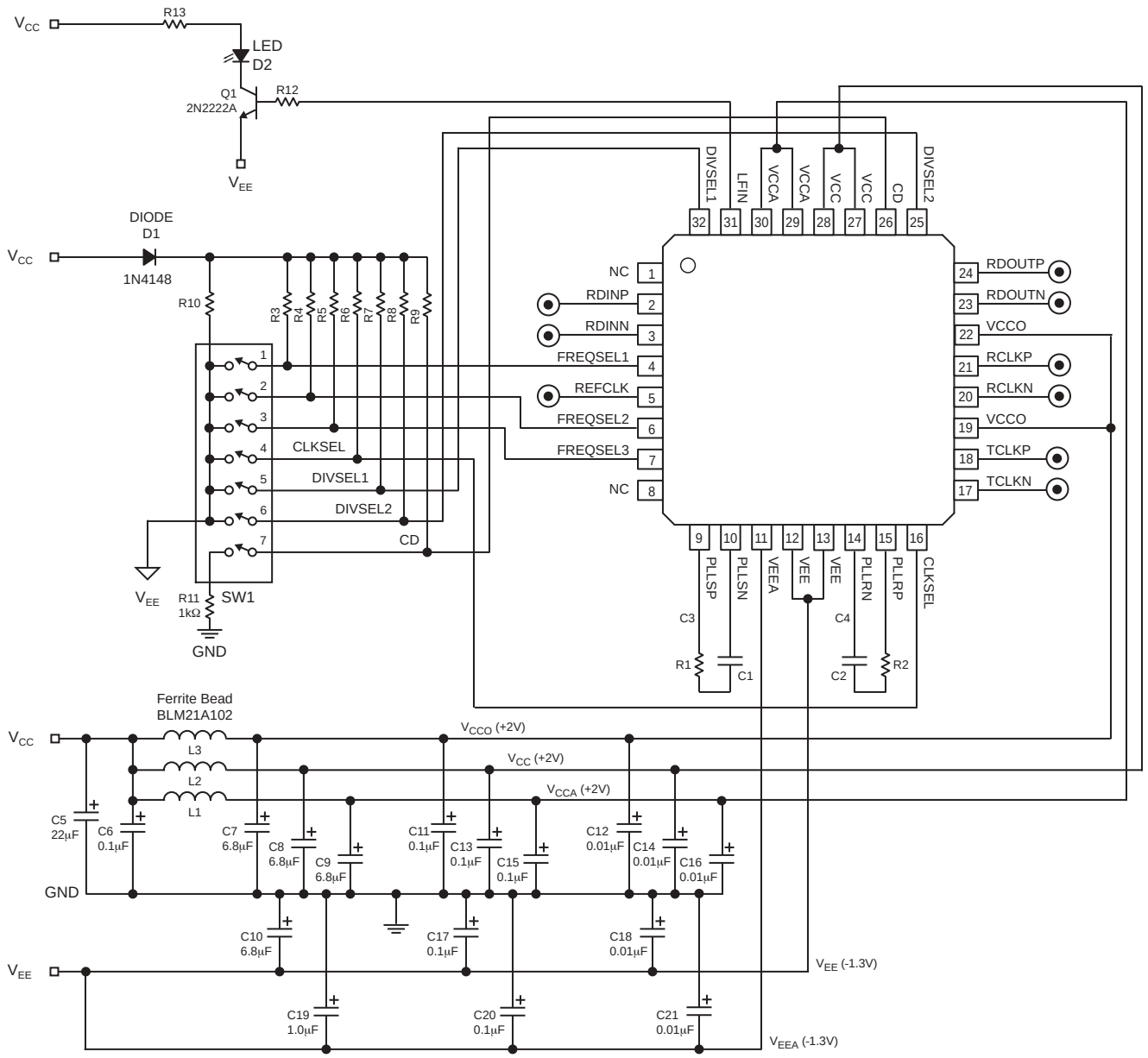

Note:

C3, C4 are optional.

C1 = C2 = 1.0µF
R1 = 350Ω
R2 = 680Ω
R3 through R10 = 5kΩ
R12 = 12kΩ
R13 = 130Ω

28-PIN APPLICATION EXAMPLE

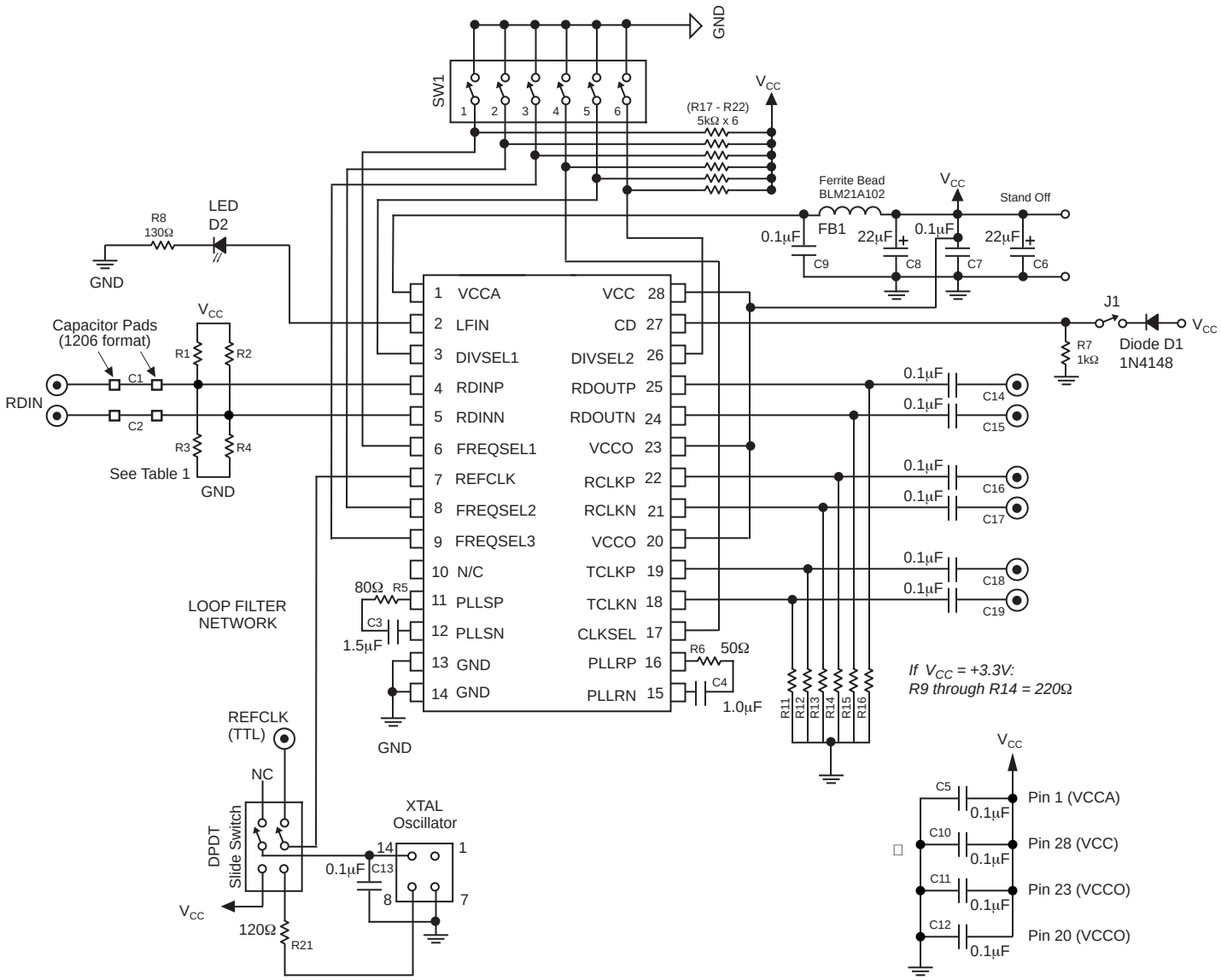

For AC-Coupling Only	For DC Mode Only
C1 = C2 = 0.1µF	C1 = C2 = Shorted
R1 = R2 = 680Ω	R1 = R2 = 130Ω
R3 = R4 = 1kΩ	R3 = R4 = 82Ω

BILL OF MATERIALS (32-PIN EPAD-TQFP)

Item	Part Number	Manufacturer	Description	Qty
C1, C2	VJ0603Y105JXJAT	Vishay	1.0µF Ceramic Capacitor, Size 0603 X7R Dielectric, Loop Filter, Critical	2
C3, C4	VJ0603Y105JXJAT	Vishay	1.0µF Ceramic Capacitor, Size 0603 X7R Dielectric, Loop Filter, Optional	2
C5	ECS-T1ED226R	Panasonic	22µF Tantalum Electrolytic Capacitor, Size D	1
C6	ECU-V1H104KBW	Panasonic	0.1µF Ceramic Capacitor, Size 1206 X7R Dielectric, Power Supply Decoupling	1
C7, C8, C9, C10	ECS-T1EC685R	Panasonic	6.8µF Tantalum Electrolytic Capacitor, Size C	4
C19	ECJ-3YB1E105K	Panasonic	1.0µF Ceramic Capacitor, Size 1206 X7R Dielectric, VEEA Decoupling	1
C11, C13	ECU-V1H104KBW	Panasonic	0.1µF Ceramic Capacitor, Size 1206 X7R Dielectric, VCCO/VCC Decoupling	1
C15, C17	ECU-V1H104KBW	Panasonic	0.1µF Ceramic Capacitor, Size 1206 X7R Dielectric, VCCA/VEEA Decoupling	1
C20	ECU-V1H104KBW	Panasonic	0.1µF Ceramic Capacitor, Size 1206 X7R Dielectric, VEEA Decoupling	1
C12, C14	ECU-V1H103KBW	Panasonic	0.01µF Ceramic Capacitor, Size 1206 X7R Dielectric, VCCO/VCC Decoupling	1
C16, C18	ECU-V1H103KBW	Panasonic	0.01µF Ceramic Capacitor, Size 1206 X7R Dielectric, VCCA/VEEA Decoupling	1
C21	ECU-V1H103KBW	Panasonic	0.01µF Ceramic Capacitor, Size 1206 X7R Dielectric, VEEA Decoupling	1
D1	1N4148		Diode	1
D2	P300-ND/P301-ND	Panasonic	T-1 3/4 Red LED	1
J1, J2, J3, J4, J5 J6, J7, J8, J9, J10, J11, J12	142-0701-851	Johnson Components	Gold Plated, Jack, SMA, PCB Mount	12
L1, L2, L3	BLM21A102F	Murata	Ferrite Beads, Power Noise Suppression	3
Q1	NTE123A	NTE	2N2222A Buffer/Driver Transistor, NPN	1
R1			350Ω Resistor, 2%, Size 0402 Loop Filter Component, Critical	1
R2			680Ω Resistor, 2%, Size 0402 Loop Filter Component, Critical	1
R3, R4, R5, R6 R7, R8, R9, R10			5kΩ Pull-up Resistors, 2%, Size 1206	8
R11			1kΩ Pull-down Resistor, 2%, Size 1206	1
R12			12kΩ Resistor, 2%, Size 1206	1
R13			130Ω Pull-up Resistor, 2%, Size 1206	1
SW1	206-7	CTS	SPST, Gold Finish, Sealed Dip Switch	1

28 LEAD SOIC .300" WIDE (Z28-1)

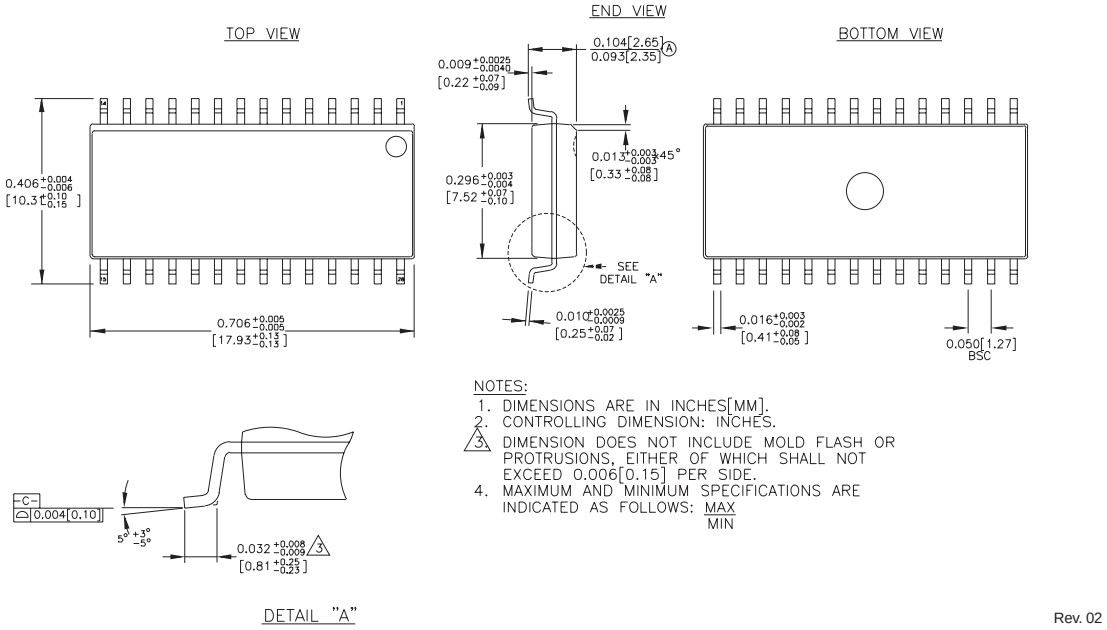

Note:

The 28 Lead SOIC package is NOT recommended for new designs.

32 LEAD EPAD TQFP (DIE UP) (H32-1)

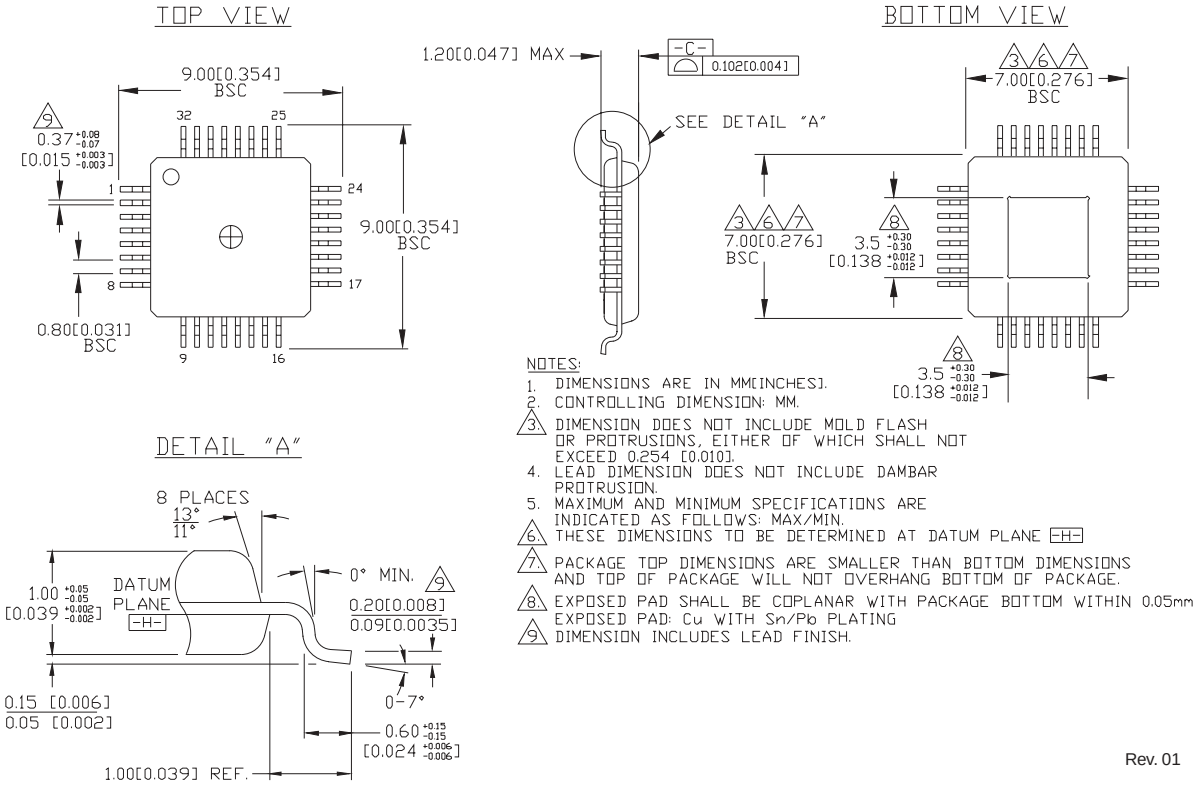

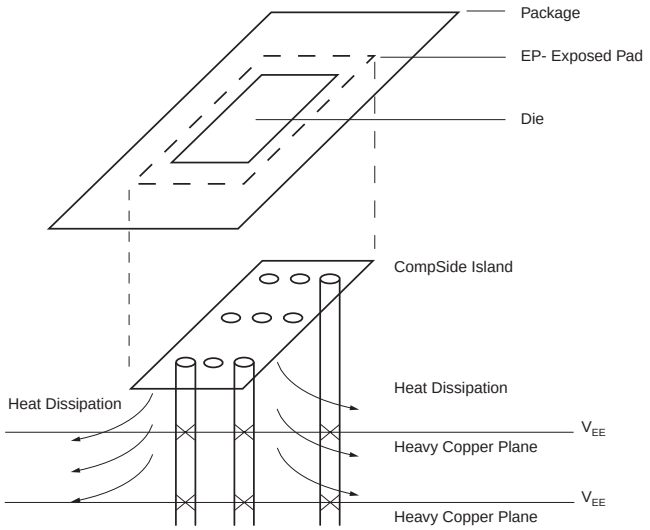

PCB Thermal Consideration for 32-Pin EPAD-TQFP Package

APPENDIX A

Layout and General Suggestions

1. Establish controlled impedance stripline, microstrip, or co-planar construction techniques.
2. Signal paths should have, approximately, the same width as the device pads.
3. All differential paths are critical timing paths, where skew should be matched to within ±10ps.
4. Signal trace impedance should not vary more than ±5%. If in doubt, perform TDR analysis of all high-speed signal traces.
5. Maintain compact filter networks as close to filter pins as possible. Provide ground plane relief under filter path to reduce stray capacitance. Be careful of crosstalk coupling into the filter network.
6. Maintain low jitter on the REFCLK input. Isolate the XTAL oscillator from power supply noise by adequately decoupling. Keep XTAL oscillator close to device, and minimize capacitive coupling from adjacent signals.
7. Higher speed operation may require use of fundamental-tone (third-overtone typically have more jitter) crystal based oscillator for optimum performance. Evaluate and compare candidates by measuring TXCLK jitter.
8. All unused outputs must be terminated. To conserve power, unused PECL outputs can be terminated with a 1kΩ resistor to V_{EE}.

MICREL, INC. 2180 FORTUNE DRIVE SAN JOSE, CA 95131 USA

TEL + 1 (408) 944-0800 FAX + 1 (408) 474-1000 WEB http://www.micrel.com

The information furnished by Micrel in this data sheet is believed to be accurate and reliable. However, no responsibility is assumed by Micrel for its use. Micrel reserves the right to change circuitry and specifications at any time without notification to the customer.

Micrel Products are not designed or authorized for use as components in life support appliances, devices or systems where malfunction of a product can reasonably be expected to result in personal injury. Life support devices or systems are devices or systems that (a) are intended for surgical implant into the body or (b) support or sustain life, and whose failure to perform can be reasonably expected to result in a significant injury to the user. A Purchaser's use or sale of Micrel Products for use in life support appliances, devices or systems is at Purchaser's own risk and Purchaser agrees to fully indemnify Micrel for any damages resulting from such use or sale.

© 2006 Micrel, Incorporated.

Looking for pricing, stock, or lifecycle information?

Click below to explore more details on WIN SOURCE:

- View SY87700LZG on WIN SOURCE
- Microchip Technology Information

Optimize Your Supply Chain with WIN SOURCE Solutions

- Global Sourcing Solution
- Obsolete Management
- Cost Control Management
- Shortage Management
- Alternative Solution
- Excess Inventory Management