THE DATASHEET OF

MLX92211LSE-AAA-000-RE

www.win-source.net 0086-755-83957316

MLX92211-AxA

3-wire hall effect Latch

Features and Benefits

- Wide operating voltage range : from 2.7V to 24V
- Chopper-stabilized amplifier stage
- Built-in negative temperature coefficient
- Reverse Supply Voltage Protection
- Output Current Limit with Auto-Shutoff
- Under-Voltage Lockout Protection
- Thermal Protection
- High ESD rating / Excellent EMC performance

Application Examples

- Automotive, Consumer and Industrial
- Solid-state switch
- 3-phase BLDC motor commutation
- Wiper motor
- Window lifter
- Sunroof/Tailgate opener
- Seat motor adjuster
- Electrical power steering

Product code	Temperature Code	Package Code	Option code	Packing form code
MLX92211	L	UA	AAA-000	BU
MLX92211	L	SE	AAA-000	RE
MLX92211	L	SE	ACA-000	RE
MLX92211	L	UA	ADA-000	BU
MLX92211	L	SE	ADA-000	RE
MLX92211	L	UA	AEA-000	BU
MLX92211	L	SE	AEA-000	RE

Legend:

Temperature Code:	L (-40°C to 150°C)
Package Code:	SE = TSOT-23L
	UA = UA (TO92-3L)
Option Code:	AAA => B_{OP}/B_{RP}= ± 3mT, TC = -1100 ppm/°C
	ACA => B_{OP}/B_{RP}= ± 3mT, TC = -2000 ppm/°C
	ADA => B_{OP}/B_{RP}= ± 14mT, TC = -2000 ppm/°C
	AEA => B_{OP}/B_{RP}= ± 3mT, TC = -1100 ppm/°C, 8kV ESD HBM
Packing Form:	BU=Bulk | RE = Reel
Ordering example:	MLX92211LUA-AAA-000-BU

1. Functional Diagram

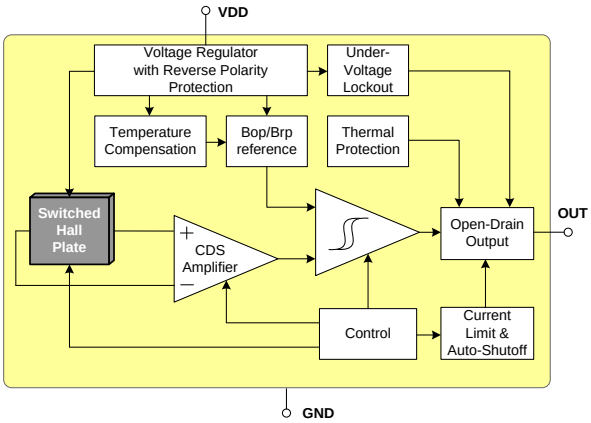

2. General Description

The Melexis MLX92211 is the second generation Hall-effect latch designed in mixed signal CMOS technology.
The device integrates a voltage regulator, Hall sensor with advanced offset cancellation system and an open-drain output driver, all in a single package. Based on a brand new platform, the magnetic core is using an improved offset cancellation system allowing faster and more accurate processing while being temperature insensitive and stress independent. In addition is implemented a negative temperature coefficient to compensate the natural behaviour of magnets becoming weaker with rise in temperature.

The included voltage regulator operates from 2.7 to 24V, hence covering a wide range of applications. With the built-in reverse voltage protection, a serial resistor or diode on the supply line is not required so that even remote sensors can be specified for low voltage operation down to 2.7V while being reverse voltage tolerant.

In the event of a drop below the minimum supply voltage during operation, the under-voltage lock-out protection will automatically freeze the device, preventing the electrical perturbation to affect the magnetic measurement circuitry. The output state is therefore only updated based on a proper and accurate magnetic measurement result.

The open drain output is fully protected against short-circuit with a built-in current limit. An additional automatic output shut-off is activated in case of a prolonged short-circuit condition. A self-check is then periodically performed to switch back to normal operation if the short-circuit condition is released.
The on-chip thermal protection also switches off the output if the junction temperature increases above an abnormally high threshold. It will automatically recover once the temperature decreases below a safe value.

With latching magnetic characteristics, the output is turned low or high respectively with a sufficiently strong South or North pole facing the package top side. When removing the magnetic field, the device keeps its previous state.

Table of Contents

1. Functional Diagram **1**
2. General Description **1**
Table of Contents **3**
3. Glossary of Terms **4**
4. Absolute Maximum Ratings **4**
5. General Electrical Specifications **5**
6. Magnetic Specifications **7**
6.1. MLX92211LSE-AAA-000/ MLX92211LUA-AAA-000 7
6.2. MLX92211LSE-ACA-000 7
6.3. MLX92211LSE-ADA-000/ MLX92211LUA-ADA-000 7
6.4. MLX92211LSE-AEA-000/ MLX92211LUA-AEA-000 7
7. Output Behaviour versus Magnetic Pole **8**
7.1. South Pole Active 8
7.2. North Pole Active 8
8. Performance Graphs **9**
8.1. Magnetic parameters vs. T_A 9
8.2. Magnetic parameters vs. V_{DD} 9
8.3. V_{DSon} vs. T_A 9
8.4. V_{DSon} vs. V_{DD} 9
8.5. I_{DD} vs. T_A 9
8.6. I_{DD} vs. V_{DD} 9
8.7. I_{OFF} vs. T_A 10
8.8. I_{OFF} vs. V_{OUT} 10
9. Application Information **11**
9.1. Typical Three-Wire Application Circuit 11
9.2. Automotive and Harsh, Noisy Environments Three-Wire Circuit 11
10. Standard information regarding manufacturability of Melexis products with different soldering processes **12**
11. ESD Precautions **12**
12. Packages **13**
12.1. SE Package (TSOT-23) package information 13
1.1 UA (TO92 - 3L) 14
13. Contact **15**
14. Disclaimer **15**

3. Glossary of Terms

MilliTesla (mT), Gauss	Units of magnetic flux density: 1mT = 10 Gauss
RoHS	Restriction of Hazardous Substances
TSOT	Thin Small Outline Transistor (TSOT package) – also referred with the Melexis package code "SE"
ESD	Electro-Static Discharge

4. Absolute Maximum Ratings

Parameter	Symbol	Value	Units
Supply Voltage [1, 2]	V_{DD}	+27	V
Supply Voltage (Load dump) [1, 3]	V_{DD}	+32	V
Supply Current [1, 2, 4]	I_{DD}	+20	mA
Supply Current [1, 3, 4]	I_{DD}	+50	mA
Reverse Supply Voltage [1, 2]	V_{DDREV}	-24	V
Reverse Supply Voltage (Load dump)[1, 3]	V_{DDREV}	-30	V
Reverse Supply Current [1, 2, 5]	I_{DDREV}	-20	mA
Reverse Supply Current [1, 3, 5]	I_{DDREV}	-50	mA
Output Voltage [1, 2]	V_{OUT}	+27	V
Output Current [1, 2, 5]	I_{OUT}	+20	mA
Output Current [1, 3, 6, 9]	I_{OUT}	+75	mA
Output Current [1, 3, 6, 10]	I_{OUT}	+85	mA
Reverse Output Voltage [1]	V_{OUTREV}	-0.5	V
Reverse Output Current [1, 2]	I_{OUTREV}	-50	mA
Operating Temperature Range	T_A	-40 to +150	°C
Storage Temperature Range	T_S	-55 to +165	°C
Maximum Junction Temperature [7]	T_J	+165	°C
ESD Sensitivity – HBM [8, 9]	-	4000	V
ESD Sensitivity – HBM [8, 10]	-	8000	V
ESD Sensitivity – CDM [11]	-	1000	V
Magnetic Flux Density	B	Unlimited	mT

Exceeding the absolute maximum ratings may cause permanent damage. Exposure to absolute-maximum-rated conditions for extended periods may affect device reliability.

---

[1] *The maximum junction temperature should not be exceeded*
[2] *For maximum 1 hour*
[3] *For maximum 0.5 s*
[4] *Including current through protection device*
[5] *Through protection device*
[6] *For V_{OUT}≤27V.*
[7] *For 1000 hours.*
[8] *Human Model according AEC-Q100-002 standard*
[9] *Valid for MLX92211AAA, MLX92211ACA, MLX92211ADA*
[10] *Valid for MLX92211AEA*
[11] *Charged Device Model according AEC-Q100-011 standard*

5. General Electrical Specifications

DC Operating Parameters T_A = -40°C to 150°C, V_{DD} = 2.7V to 24V (unless otherwise specified)

Parameter	Symbol	Test Conditions	Min	Typ [1]	Max	Units
Supply Voltage	V_{DD}	Operating	2.7	-	24	V
Supply Current	I_{DD}		1.5	3.0	4.5	mA
Reverse Supply Current	I_{DDREV}	V_{DD} = -18V	-1			mA
Output Leakage Current	I_{OFF}	V_{OUT} = 12V, V_{DD} = 12V, B < Brp		0.1	10	µA
Output Saturation Voltage	V_{DSon}	B > B_{OP}, V_{DD} = 3.8 to 18V, I_{OUT} = 20mA		0.2	0.5	V
Output Rise Time [2]	t_R	V_{DD} = 12V, V_{PU}[3] = 5V, R_{PU} = 1kΩ C_{LOAD} = 50pF to GND	0.1	0.3	1	µs
Output Fall Time [2]	t_F	V_{DD} = 12V, V_{PU} = 5V, R_{PU} = 1kΩ C_{LOAD} = 50pF to GND	0.1	0.3	1	µs
Output Current Limit [4]	I_{CL}	B > B_{OP}, V_{DD}=3.8 to 18V, V_{OUT} = 12V	22	40	70	mA
Output Current Limit [5]	I_{CL}	B > B_{OP}, V_{DD}=3.8 to 18V, V_{OUT} = 12V	30	50	80	mA
Output ON Time under Current Limit conditions [6]	t_{CLON}	B > B_{OP}, V_{PU} = 12V, R_{PU} = 100Ω	150	240		µs
Output OFF Time under Current Limit conditions [6]	t_{CLOFF}	B > B_{OP}, V_{PU} = 12V, R_{PU} = 100Ω		3.5		ms
Chopping Frequency	f_{CHOP}			340		kHz
Output Refresh Period [2]	t_{PER}			6		µs
Delay time [2,7]	t_D	Average over 1000 successive switching events @10kHz, square wave with B≥30mT, t_{RISE}=t_{FALL}≤20µs		6		µs
Output Jitter (p-p) [2, 8]	t_{JITTER}	Over 1000 successive switching events @1kHz, square wave with B≥30mT, t_{RISE}=t_{FALL} ≤100µs		±3		µs
Maximum Switching Frequency [2, 9]	f_{SW}	B≥30mT and square wave magnetic field	30	50		kHz

[1] *Typical values are defined at T_A = +25°C and V_{DD} = 12V, unless otherwise specified*
[2] *Guaranteed by design and verified by characterization, not production tested*
[3] *R_{PU} and V_{PU} are respectively the external pull-up resistor and pull-up power supply*
[4] *Valid for MLX92211AAA, MLX92211ACA, MLX92211ADA*
[5] *Valid for MLX92211AEA*
[6] *If the Output is in Current Limitation longer than t_{CLON} the Output is switched off in high-impedance state. The Output returns back in active state at next reaching of B_{OP} or after t_{CLOFF} time interval*
[7] *The Delay Time is the time from magnetic threshold reached to the start of the output switching*
[8] *Output jitter is the unpredictable deviation of the Delay time*
[9] *Maximum switching frequency corresponds to the maximum frequency of the applied magnetic field which is detected without loss of pulses.*

Power-On Time [1, 2]	t_{ON}	V_{DD} = 5V, dV_{DD}/dt > 2V/us		16	35	µs
Under-voltage Lockout Threshold	V_{UVL}		2.2	2.4	2.7	V
Under-voltage Lockout Reaction time	t_{UVL}			1		µs
Thermal Protection Threshold [3]	T_{PROT}	Junction temperature		185		°C
Thermal Protection Release [3]	T_{REL}	Junction temperature		170		°C
SE Package Thermal Resistance	R_{TH}	Single layer (1S) Jedec		300		°C/W
UA Package Thermal Resistance	R_{TH}	Single layer (1S) Jedec		200		°C/W

[1] *The power-On Time represents the time from reaching V_{DD} =V_{POR} to the first refresh of the output (first valid output state)*

[2] *Power-On Slew Rate is not critical for the proper device start-up*

[3] *T_{PROT} and T_{REL} are the corresponding junction temperature values*

6. Magnetic Specifications

6.1. MLX92211LSE-AAA-000/ MLX92211LUA-AAA-000

DC Operating Parameters V_{DD} = 3.8 to 24V, T_a = -40°C to 150°C

Test Condition	Operating Point B_{OP} (mT)			Release Point B_{RP} (mT)			TC (ppm/°C)	Active Pole
	Min	Typ [1]	Max	Min	Typ [1]	Max	Typ [2]	
T_A = -40°C	1.4	3.2	4.7	-4.7	-3.2	-1.4	-1100	South Pole
T_A = 25°C	1.4	3	4.7	-4.7	-3.0	-1.4		
T_A = 150°C	0.7	2.6	5	-5	-2.6	-0.7		

6.2. MLX92211LSE-ACA-000

DC Operating Parameters V_{DD} = 3.8 to 24V, T_a = -40°C to 150°C

Test Condition	Operating Point B_{OP} (mT)			Release Point B_{RP} (mT)			TC (ppm/°C)	Active Pole
	Min	Typ [1]	Max	Min	Typ [1]	Max	Typ [2]	
T_A = -40°C	1.2	3.2	5.5	-5.5	-3.2	-1.2	-2000	North Pole
T_A = 25°C	1.0	2.8	4.7	-4.7	-2.8	-1.0		
T_A = 150°C	0.5	2.1	4.2	-4.2	-2.1	-0.5		

6.3. MLX92211LSE-ADA-000/ MLX92211LUA-ADA-000

DC Operating Parameters V_{DD} = 3.8 to 24V, T_a = -40°C to 150°C

Test Condition	Operating Point B_{OP} (mT)			Release Point B_{RP} (mT)			TC (ppm/°C)	Active Pole
	Min	Typ [1]	Max	Min	Typ [1]	Max	Typ [2]	
T_A = -40°C	11.0	15.1	20.0	-20.0	-15.1	-11.0	-2000	South Pole
T_A = 25°C	10.2	13.5	17.1	-17.1	-13.5	-10.2		
T_A = 150°C	6.7	10.3	14.7	-14.7	-10.3	-6.7		

6.4. MLX92211LSE-AEA-000/ MLX92211LUA-AEA-000

Test Condition	Operating Point B_{OP} (mT)			Release Point B_{RP} (mT)			TC (ppm/°C)	Active Pole
	Min	Typ [1]	Max	Min	Typ [1]	Max	Typ [2]	
T_A = -40°C	1.4	3.2	4.7	-4.7	-3.2	-1.4	-1100	South Pole
T_A = 25°C	1.4	3.0	4.7	-4.7	-3.0	-1.4		
T_A = 150°C	0.7	2.6	5.0	-5.0	-2.6	-0.7		

[1] *Typical values are defined at T_A = +25°C and V_{DD}, unless otherwise specified*

[2] $\frac{B_{T2}-B_{T1}}{B_{25^oC}\times(T_2-T_1)}*10^6, ppm/^oC; T_1=-40^oC; T_2=150^oC$, *value guaranteed by design and verified by characterization, not production tested*

7. Output Behaviour versus Magnetic Pole

Output behaviour versus magnetic pole [1]

7.1. South Pole Active

DC Operating Parameters T_A = -40°C to 150°C, V_{DD} = 2.7V to 24V

Parameter	Test Conditions	OUT
South pole	$B > B_{OP}$	Low (V_{DSon})
North pole	$B < B_{RP}$	High (V_{PU}) [2]

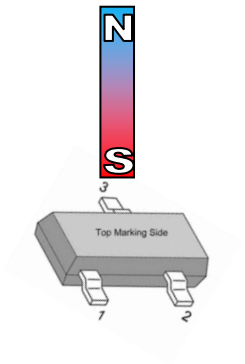

7.2. North Pole Active

DC Operating Parameters T_A = -40°C to 150°C, V_{DD} = 2.7V to 24V

Parameter	Test Conditions	OUT
South pole	$B > B_{OP}$	High (V_{PU}) [2]
North pole	$B < B_{RP}$	Low (V_{DSon})

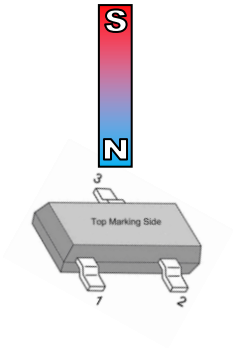

[1] *Magnetic pole facing the branded/top side of the package*

[2] *Default Output state during power-up*

8. Performance Graphs

8.1. Magnetic parameters vs. T_A

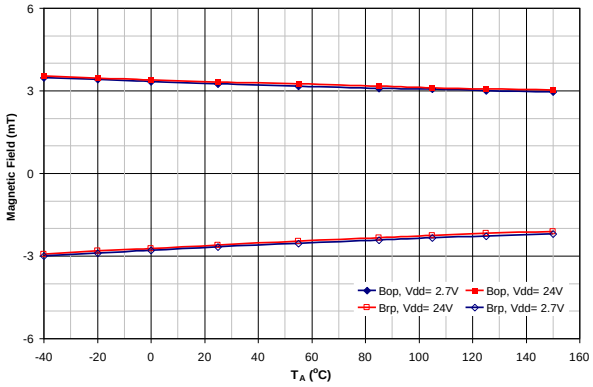

8.2. Magnetic parameters vs. V_{DD}

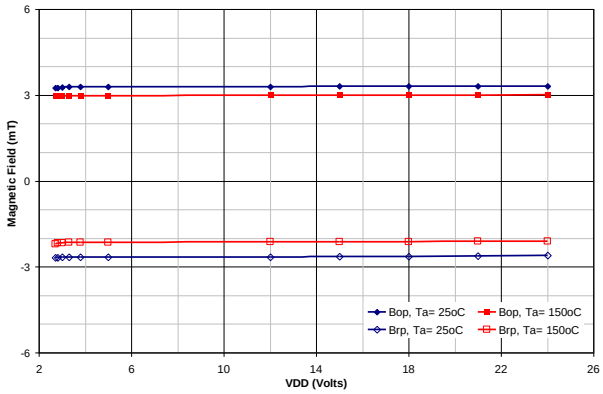

8.3. V_{DSon} vs. T_A

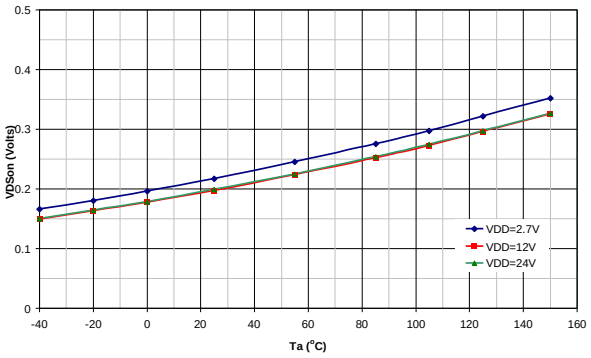

8.4. V_{DSon} vs. V_{DD}

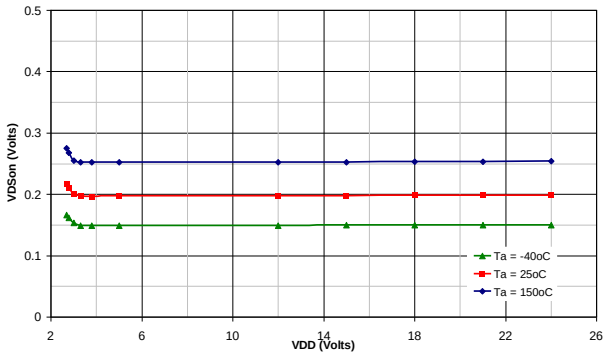

8.5. I_{DD} vs. T_A

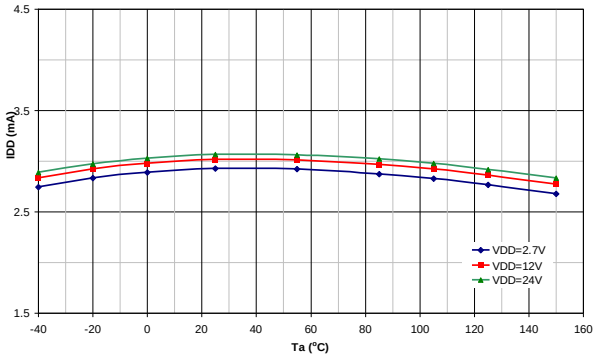

8.6. I_{DD} vs. V_{DD}

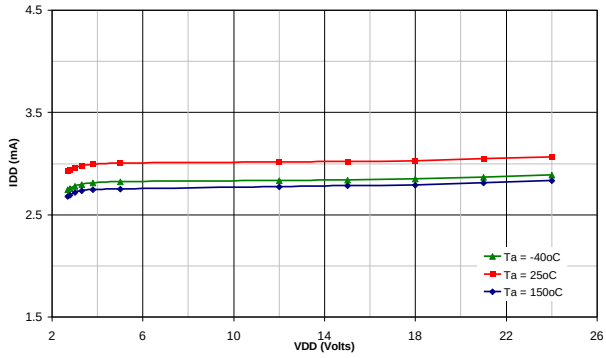

8.7. I_{OFF} vs. T_A

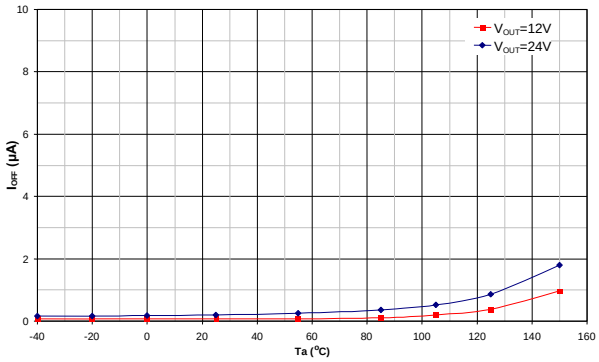

8.8. I_{OFF} vs. V_{OUT}

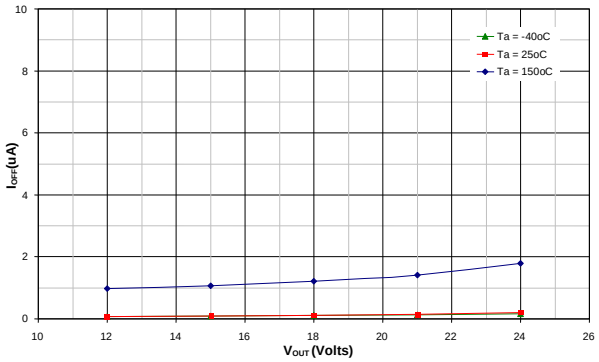

9. Application Information

9.1. Typical Three-Wire Application Circuit

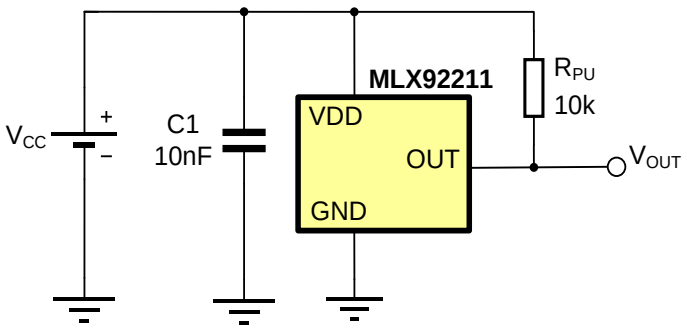

Notes:
1. For proper operation, a 10nF to 100nF bypass capacitor should be placed as close as possible to the V_{DD} and ground pin.
2. The pull-up resistor R_{PU} value should be chosen in to limit the current through the output pin below the maximum allowed continuous current for the device.
3. A capacitor connected to the output is not obligatory, because the output slope is generated internally.

9.2. Automotive and Harsh, Noisy Environments Three-Wire Circuit

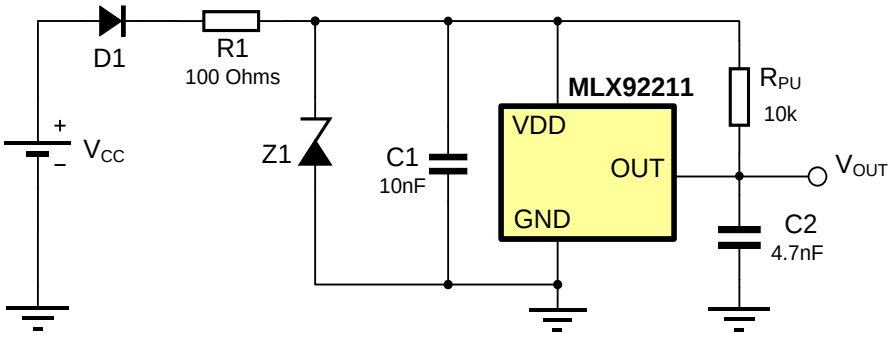

Notes:
1. For proper operation, a 10nF to 100nF bypass capacitor should be placed as close as possible to the V_{DD} and ground pin.
2. The device could tolerate negative voltage down to -27V, so if negative transients over supply line V_{PEAK}< -32V are expected, usage of the diode D1 is recommended. Otherwise only R1 is sufficient.
When selecting the resistor R1, three points are important:
- the resistor has to limit I_{DD}/I_{DDREV} to 50mA maximum
- the resistor has to withstand the power dissipated in both over voltage conditions ($V_{R1}^2/R1$)
- the resulting device supply voltage V_{DD} has to be higher than V_{DD} min ($V_{DD} = V_{CC} – R1.I_{DD}$)

3. The device could tolerate positive supply voltage up to +27V (until the maximum power dissipation is not exceeded), so if positive transients over supply line with V_{PEAK}> 32V are expected, usage a zener diode Z1 is recommended. The R1-Z1 network should be sized to limit the voltage over the device below the maximum allowed.

10. Standard information regarding manufacturability of Melexis products with different soldering processes

Our products are classified and qualified regarding soldering technology, solderability and moisture sensitivity level according to following test methods:

Reflow Soldering SMD's (Surface Mount Devices)

- IPC/JEDEC J-STD-020
  Moisture/Reflow Sensitivity Classification for Nonhermetic Solid State Surface Mount Devices
  (classification reflow profiles according to table 5-2)
- EIA/JEDEC JESD22-A113
  Preconditioning of Nonhermetic Surface Mount Devices Prior to Reliability Testing
  (reflow profiles according to table 2)

Wave Soldering SMD's (Surface Mount Devices) and THD's (Through Hole Devices)

- EN60749-20
  Resistance of plastic- encapsulated SMD's to combined effect of moisture and soldering heat
- EIA/JEDEC JESD22-B106 and EN60749-15
  Resistance to soldering temperature for through-hole mounted devices

Iron Soldering THD's (Through Hole Devices)

- EN60749-15
  Resistance to soldering temperature for through-hole mounted devices

Solderability SMD's (Surface Mount Devices) and THD's (Through Hole Devices)

- EIA/JEDEC JESD22-B102 and EN60749-21
  Solderability

For all soldering technologies deviating from above mentioned standard conditions (regarding peak temperature, temperature gradient, temperature profile etc) additional classification and qualification tests have to be agreed upon with Melexis.

The application of Wave Soldering for SMD's is allowed only after consulting Melexis regarding assurance of adhesive strength between device and board.

Melexis is contributing to global environmental conservation by promoting **lead free** solutions. For more information on qualifications of **RoHS** compliant products (RoHS = European directive on the Restriction Of the use of certain Hazardous Substances) please visit the quality page on our website: http://www.melexis.com/quality.aspx

11. ESD Precautions

Electronic semiconductor products are sensitive to Electro Static Discharge (ESD).
Always observe Electro Static Discharge control procedures whenever handling semiconductor products.

12. Packages

12.1. SE Package (TSOT-23) package information

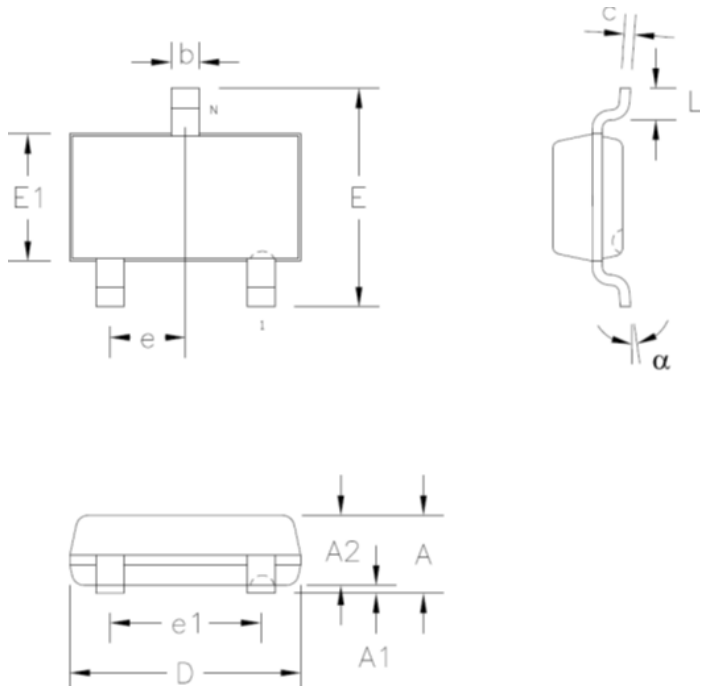

Notes:

1. All dimensions are in millimeters
2. Outermost plastic extreme width does not include mold flash or protrusions. Mold flash and protrusions shall not exceed 0.15mm per side.
3. Outermost plastic extreme length does not include mold flash or protrusions. Mold flash and protrusions shall not exceed 0.25mm per side.
4. The lead width dimension does not include dambar protrusion. Allowable dambar protrusion shall be 0.07mm total in excess of the lead width dimension at maximum material condition.
5. Dimension is the length of terminal for soldering to a substrate.
6. Formed lead shall be planar with respect to one another with 0.076mm at seating plane.

Marking:

Top side :

AAA/AEA: 11YY (11: Part Number 92211; YY: Year (last 2 digits))

ACA: 11CY (11C: Part Number 92211; Y: Year (last digit))

ADA: 11DY (11C: Part Number 92211; Y: Year (last digit))

Bottom side:

XXXX (XXXX: Lot Number (last 4 digits)

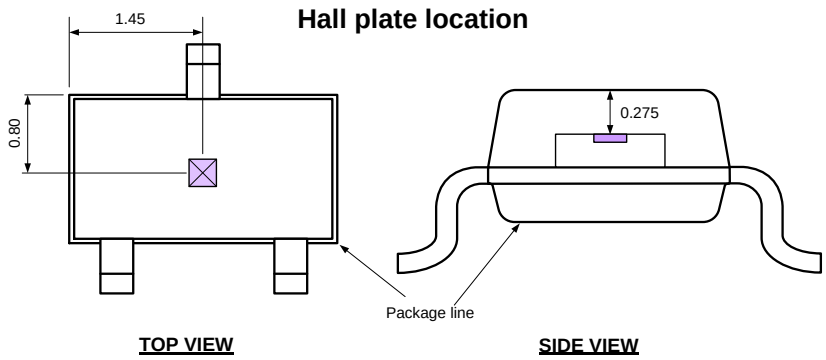

	A	A1	A2	D	E	E1	L	b	c	e	e1	α
min	–	0.025	0.85	2.80	2.60	1.50	0.30	0.30	0.10	0.95 BSC	1.90 BSC	0°
max	1.00	0.10	0.90	3.00	3.00	1.70	0.50	0.45	0.20			8°

Pin №	Name	Type	Function
1	VDD	Supply	Supply voltage pin
2	OUT	Output	Open drain output pin
3	GND	Ground	Ground pin

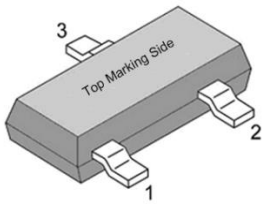

1.1 UA (TO92 - 3L)

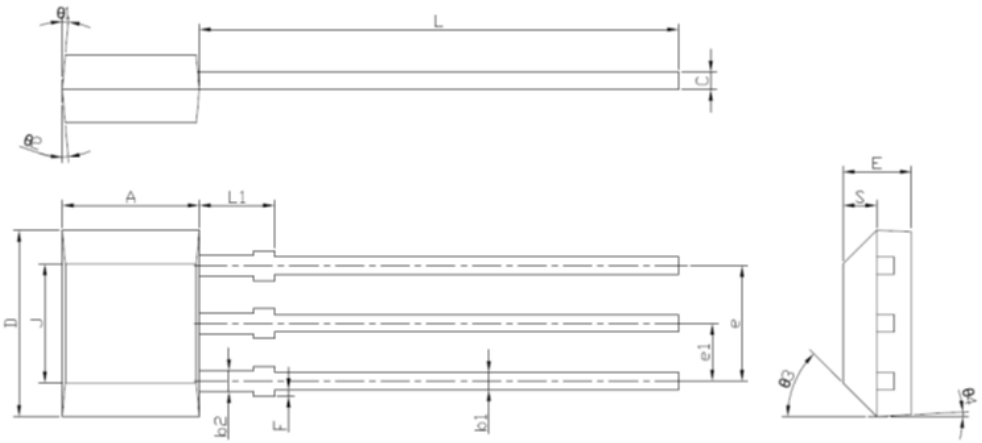

Hall plate location

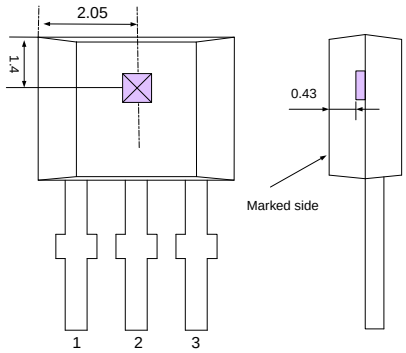

Notes:

1. All dimensions are in millimeters
2. Package dimension exclusive molding flash.
3. The end flash shall not exceed 0.127 mm on the top side.

Marking:

1st Line :

AAA/AEA: 11BY; Y - last digit of year

ADA: 11DY; Y - last digit of year

2nd Line :

LLLL; LLLL- last four digits from lot number

	A	D	E	F	J	L	L1	S	b1	b2	c	e	e1
min	2.80	3.90	1.40	0.00	2.51	14.0	0.90	0.63	0.35	0.43	0.35	2.51	1.24
max	3.20	4.30	1.60	0.20	2.72	15.0	1.10	0.84	0.44	0.52	0.44	2.57	1.30

	θ1	θ2	θ3	θ4
Min	7° REF	7° REF	45° REF	7° REF
max				

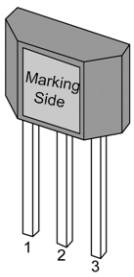

Pin №	Name	Type	Function
1	VDD	Supply	Supply voltage pin
2	GND	Ground	Ground pin
3	OUT	Output	Open drain output pin

13. Contact

For the latest version of this document, go to our website at www.melexis.com.

For additional information, please contact our Direct Sales team and get help for your specific needs:

Europe, Africa	Telephone: +32 13 67 04 95
	Email : sales_europe@melexis.com
Americas	Telephone: +1 603 223 2362
	Email : sales_usa@melexis.com
Asia	Email : sales_asia@melexis.com

14. Disclaimer

The information furnished by Melexis herein ("Information") is believed to be correct and accurate. Melexis disclaims (i) any and all liability in connection with or arising out of the furnishing, performance or use of the technical data or use of the product(s) as described herein ("Product") (ii) any and all liability, including without limitation, special, consequential or incidental damages, and (iii) any and all warranties, express, statutory, implied, or by description, including warranties of fitness for particular purpose, non-infringement and merchantability. No obligation or liability shall arise or flow out of Melexis' rendering of technical or other services.
The Information is provided "as is" and Melexis reserves the right to change the Information at any time and without notice. Therefore, before placing orders and/or prior to designing the Product into a system, users or any third party should obtain the latest version of the relevant information to verify that the information being relied upon is current.
Users or any third party must further determine the suitability of the Product for its application, including the level of reliability required and determine whether it is fit for a particular purpose.
The Information is proprietary and/or confidential information of Melexis and the use thereof or anything described by the Information does not grant, explicitly or implicitly, to any party any patent rights, licenses, or any other intellectual property rights.
This document as well as the Product(s) may be subject to export control regulations. Please be aware that export might require a prior authorization from competent authorities.
The Product(s) are intended for use in normal commercial applications. Unless otherwise agreed upon in writing, the Product(s) are not designed, authorized or warranted to be suitable in applications requiring extended temperature range and/or unusual environmental requirements. High reliability applications, such as medical life-support or life-sustaining equipment are specifically not recommended by Melexis.
The Product(s) may not be used for the following applications subject to export control regulations: the development, production, processing, operation, maintenance, storage, recognition or proliferation of 1) chemical, biological or nuclear weapons, or for the development, production, maintenance or storage of missiles for such weapons: 2) civil firearms, including spare parts or ammunition for such arms; 3) defense related products, or other material for military use or for law enforcement; 4) any applications that, alone or in combination with other goods, substances or organisms could cause serious harm to persons or goods and that can be used as a means of violence in an armed conflict or any similar violent situation.
The Products sold by Melexis are subject to the terms and conditions as specified in the Terms of Sale, which can be found at https://www.melexis.com/en/legal/terms-and-conditions.

This document supersedes and replaces all prior information regarding the Product(s) and/or previous versions of this document.

Melexis NV © - No part of this document may be reproduced without the prior written consent of Melexis. (2016)

ISO/TS 16949 and ISO14001 Certified

Looking for pricing, stock, or lifecycle information?

Click below to explore more details on WIN SOURCE:

- View MLX92211LSE-AAA-000-RE on WIN SOURCE
- Melexis Technologies NV Information

Optimize Your Supply Chain with WIN SOURCE Solutions

- Global Sourcing Solution
- Obsolete Management
- Cost Control Management
- Shortage Management
- Alternative Solution
- Excess Inventory Management