16:1 MULTIPLEXER

SY10E164
SY100E164

FEATURES

- **850ps Data Input to Output**
- **Extended 100E V_{EE} range of –4.2V to –5.5V**
- **Differential output**
- **Fully compatible with industry standard 10KH, 100K ECL levels**
- **Internal 75KΩ input pull-down resistors**
- **Fully compatible with Motorola MC10E/100E164**
- **Available in 28-pin PLCC package**

DESCRIPTION

The SY10/100E164 are 16:1 multiplexers with a differential output. The select inputs ($SEL_{0,1,2,3}$) control which one of the sixteen data inputs (A_0–A_{15}) is propagated to the output.

Special attention to the design layout results in a typical skew between the 16 inputs of only 50ps.

BLOCK DIAGRAM

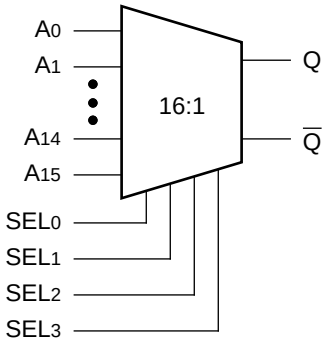

PIN NAMES

Pin	Function
A_0 – A_{15}	Data Inputs
SEL[0:3]	Select Inputs
$\overline{Q}$, Q	Outputs
V_{CCO}	V_{CC} to Output

PACKAGE/ORDERING INFORMATION

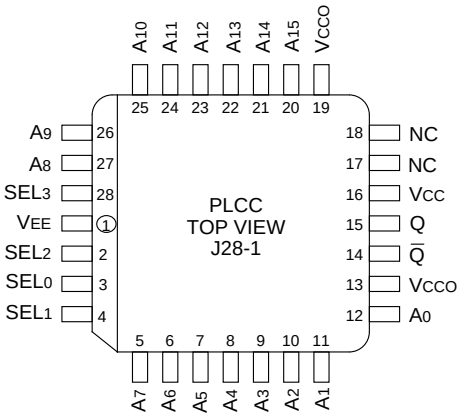

28-Pin PLCC (J28-1)

Ordering Information[1]

Part Number	Package Type	Operating Range	Package Marking	Lead Finish
SY10E164JC	J28-1	Commercial	SY10E164JC	Sn-Pb
SY10E164JCTR[2]	J28-1	Commercial	SY10E164JC	Sn-Pb
SY100E164JC	J28-1	Commercial	SY100E164JC	Sn-Pb
SY100E164JCTR[2]	J28-1	Commercial	SY100E164JC	Sn-Pb
SY10E164JZ[3]	J28-1	Commercial	SY10E164JZ with Pb-Free bar-line indicator	Matte-Sn
SY10E164JZTR[2, 3]	J28-1	Commercial	SY10E164JZ with Pb-Free bar-line indicator	Matte-Sn
SY100E164JZ[3]	J28-1	Commercial	SY100E164JZ with Pb-Free bar-line indicator	Matte-Sn
SY100E164JZTR[2, 3]	J28-1	Commercial	SY100E164JZ with Pb-Free bar-line indicator	Matte-Sn

Notes:

1. Contact factory for die availability. Dice are guaranteed at T_A = 25°C, DC Electricals only.
2. Tape and Reel.
3. Pb-Free package is recommended for new designs.

TRUTH TABLE

SEL_3	SEL_2	SEL_1	SEL_0	Data
L	L	L	L	A_0
L	L	L	H	A_1
L	L	H	L	A_2
L	L	H	H	A_3
L	H	L	L	A_4
L	H	L	H	A_5
L	H	H	L	A_6
L	H	H	H	A_7

SEL_3	SEL_2	SEL_1	SEL_0	Data
H	L	L	L	A_8
H	L	L	H	A_9
H	L	H	L	A_{10}
H	L	H	H	A_{11}
H	H	L	L	A_{12}
H	H	L	H	A_{13}
H	H	H	L	A_{14}
H	H	H	H	A_{15}

DC ELECTRICAL CHARACTERISTICS

$V_{EE} = V_{EE}$ (Min.) to V_{EE} (Max.); $V_{CC} = V_{CCO}$ = GND

Symbol	Parameter	$T_A = 0°C$			$T_A = +25°C$			$T_A = +85°C$			Unit	Condition
		Min.	Typ.	Max.	Min.	Typ.	Max.	Min.	Typ.	Max.		
I_{IH}	Input HIGH Current	—	—	150	—	—	150	—	—	150	µA	—
I_{EE}	Power Supply Current										mA	—
	10E	—	59	71	—	59	71	—	59	71		
	100E	—	59	71	—	59	71	—	68	81		

AC ELECTRICAL CHARACTERISTICS

$V_{EE} = V_{EE}$ (Min.) to V_{EE} (Max.); $V_{CC} = V_{CCO}$ = GND

Symbol	Parameter	$T_A = 0°C$			$T_A = +25°C$			$T_A = +85°C$			Unit	Condition
		Min.	Typ.	Max.	Min.	Typ.	Max.	Min.	Typ.	Max.		
t_{PD}	Propagation Delay to Output										ps	—
	A Input	350	600	850	350	600	850	350	600	850		
	SEL_0	500	700	900	500	700	900	500	700	900		
	SEL_1	400	675	900	400	675	900	400	675	900		
	SEL_2	400	675	900	400	675	900	400	675	900		
	SEL_3	400	550	700	400	550	700	400	550	700		
t_{skew}	Within-Device Skew	—	50	—	—	50	—	—	50	—	ps	1
t_r t_f	Rise/Fall Times 20–80%	275	400	550	275	400	550	275	400	550	ps	—

Note:

1. Within-device skew is defined as the difference in the A to Q delay between the 16 different A inputs.

28-PIN PLCC (J28-1)

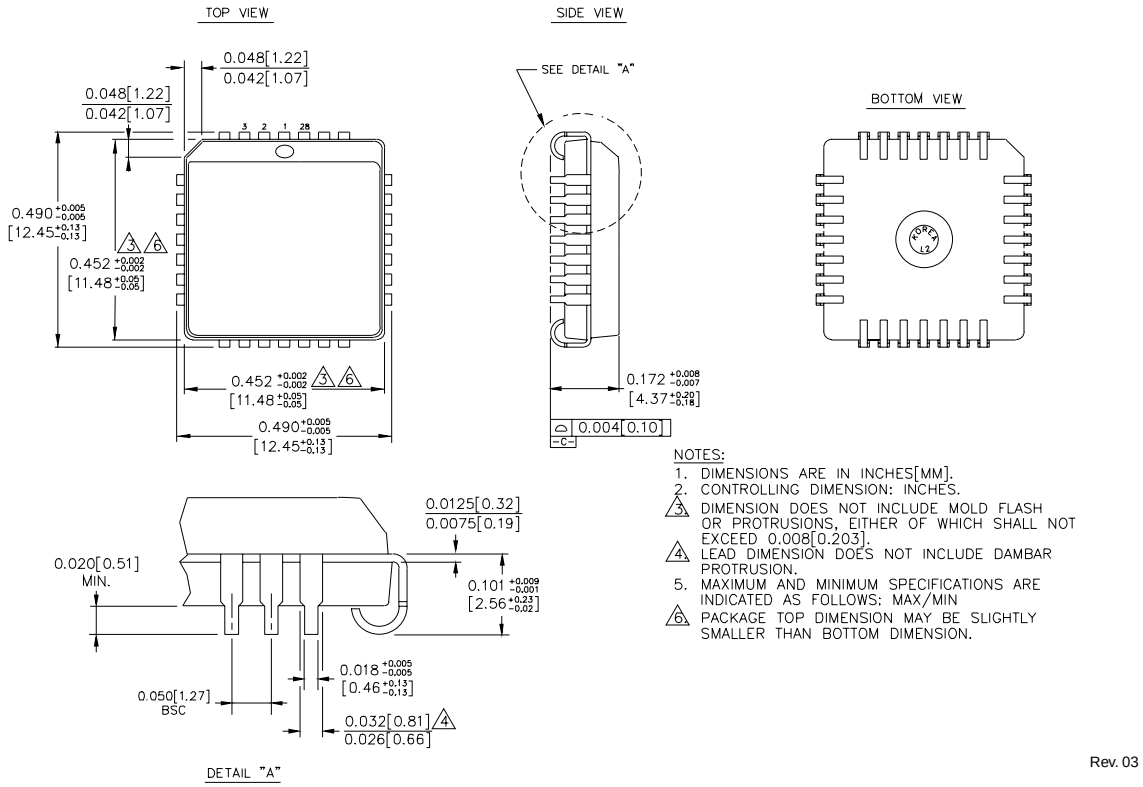

MICREL, INC. 2180 FORTUNE DRIVE SAN JOSE, CA 95131 USA

TEL + 1 (408) 944-0800 FAX + 1 (408) 474-1000 WEB http://www.micrel.com

The information furnished by Micrel in this data sheet is believed to be accurate and reliable. However, no responsibility is assumed by Micrel for its use. Micrel reserves the right to change circuitry and specifications at any time without notification to the customer.

Micrel Products are not designed or authorized for use as components in life support appliances, devices or systems where malfunction of a product can reasonably be expected to result in personal injury. Life support devices or systems are devices or systems that (a) are intended for surgical implant into the body or (b) support or sustain life, and whose failure to perform can be reasonably expected to result in a significant injury to the user. A Purchaser's use or sale of Micrel Products for use in life support appliances, devices or systems is at Purchaser's own risk and Purchaser agrees to fully indemnify Micrel for any damages resulting from such use or sale.

© 2006 Micrel, Incorporated.

Looking for pricing, stock, or lifecycle information?

Click below to explore more details on WIN SOURCE:

- View SY100E164JC on WIN SOURCE
- Microchip Technology Information

Optimize Your Supply Chain with WIN SOURCE Solutions

- Global Sourcing Solution
- Obsolete Management
- Cost Control Management
- Shortage Management
- Alternative Solution
- Excess Inventory Management