THE DATASHEET OF

LM8364BALMF45/NOPB

www.win-source.net 0086-755-83957316

LM8364 Micropower Undervoltage Sensing Circuits

Check for Samples: LM8364

FEATURES

- **Extremely Low Quiescent Current: 0.65µA, at V_{IN} = 2.87V**
- **High Accuracy Threshold Voltage (±2.5%)**
- **Open Drain Output**
- **Input Voltage Range: 1V to 6V**
- **Surface Mount Package (5-Pin SOT-23)**
- **Pin for Pin Compatible with MC33464**

APPLICATIONS

- **Low Battery Detection**
- **Microprocessor Reset Controller**
- **Power Fail Indicator**
- **Battery Backup Detection**

DESCRIPTION

The LM8364 series are micropower undervoltage sensing circuits that are ideal for use in battery powered microprocessor based systems, where extended battery life is a key requirement.

A range of threshold voltages from 2.0V to 4.5V are available with an active low open drain output. These devices feature a very low quiescent current of 0.65µA typical. The LM8364 series features a highly accurate voltage reference, a comparator with precise thresholds and built-in hysterisis to prevent erratic reset operation, and ensured Reset operation down to 1.0V with extremely low standby current.

These devices are available in the space saving SOT-23 5-pin surface mount package. For other undervoltage thresholds and output options, please contact Texas Instruments.

Functional Block Diagram

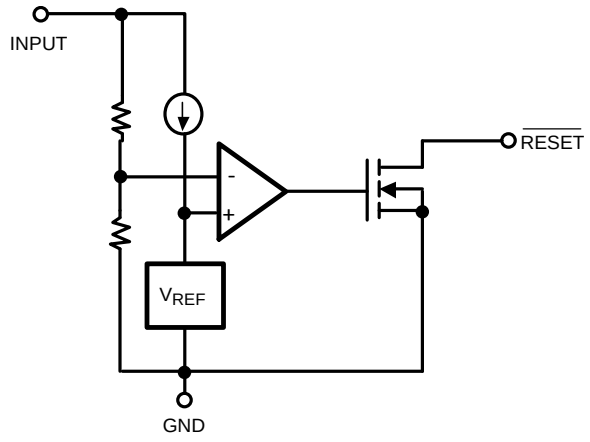

Connection Diagram

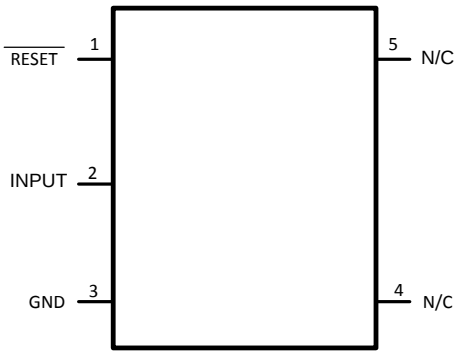

Figure 1. 5-Pin SOT-23 Top View

Please be aware that an important notice concerning availability, standard warranty, and use in critical applications of Texas Instruments semiconductor products and disclaimers thereto appears at the end of this data sheet.

All trademarks are the property of their respective owners.

PRODUCTION DATA information is current as of publication date. Products conform to specifications per the terms of the Texas Instruments standard warranty. Production processing does not necessarily include testing of all parameters.

Copyright © 2003–2013, Texas Instruments Incorporated

These devices have limited built-in ESD protection. The leads should be shorted together or the device placed in conductive foam during storage or handling to prevent electrostatic damage to the MOS gates.

Absolute Maximum Ratings[1][2]

Supply Voltage		−0.3V to 6.5V
$\overline{\text{RESET}}$ Output Voltage		−0.3V to 6.5V
$\overline{\text{RESET}}$ Output Current		70mA
Storage Temperature Range		−65°C to 150°C
Mounting Temp.	Lead Temp (Soldering, 10 sec)	260°C
Junction Temperature		125°

(1) Absolute Maximum Ratings indicate limits beyond which damage to the device may occur. Operating Ratings indicate conditions for which the device is intended to be functional, but specific performance is not ensured. For ensured specifications and the test conditions, see the Electrical Characteristics.
(2) If Military/Aerospace specified devices are required, please contact the Texas Instruments Sales Office/Distributors for availability and specifications.

Operating Ratings [1]

Temperature Range	−40°C to 85°C
Thermal Resistance to ambient (θ_{JA})	265°C/W
ESD Tolerance	
Human Body Model	2000V
Machine Model	200V

(1) Absolute Maximum Ratings indicate limits beyond which damage to the device may occur. Operating Ratings indicate conditions for which the device is intended to be functional, but specific performance is not ensured. For ensured specifications and the test conditions, see the Electrical Characteristics.

Electrical Characteristics

Unless otherwise specified, all limits ensured for T_A = 25°C.

Symbol	Parameter	Conditions	Min (1)	Typ (2)	Max (1)	Units
V_{DET-}	Detector Threshold Voltage	High to Low State Output (V_{IN} Decreasing)				V
		20 Suffix	1.950	2.0	2.050	
		27 Suffix	2.633	2.7	2.767	
		30 Suffix	2.925	3.0	3.075	
		32 Suffix	3.120	3.2	3.280	
		45 Suffix	4.388	4.5	4.613	
V_{HYS}	Detector Threshold Hysteresis	V_{IN} Increasing				V
		20 Suffix	0.060	0.100	0.140	
		27 Suffix	0.081	0.135	0.189	
		30 Suffix	0.090	0.150	0.210	
		32 Suffix	0.096	0.160	0.224	
		45 Suffix	0.135	0.225	0.315	
ΔVdet/ΔT	Detector Threshold Voltage Temperature Coefficient			±100		PPM/°C
V_{OL}	$\overline{\text{RESET}}$ Output Voltage Low State	(Open Drain Output: I_{SINK} = 1mA)		0.25	0.5	V
I_{OL}	$\overline{\text{RESET}}$ Output Sink Current	V_{IN} = 1.5V, V_{OL} = 0.5V	1.0	2.5		mA
V_{IN}	Operating Input Voltage Range		1.0		6.0	V

(1) All limits are ensured by testing or statistical analysis.
(2) Typical values represent the most likely parametric norm

Copyright © 2003–2013, Texas Instruments Incorporated

Electrical Characteristics (continued)

Unless otherwise specified, all limits ensured for T_A = 25°C.

Symbol	Parameter	Conditions	Min (1)	Typ (2)	Max (1)	Units
I_{IN}	Quiescent Input Current	20 Suffix				μA
		V_{IN} = 1.9V		0.55	0.8	
		V_{IN} = 4.0V		0.70	1.3	
		27 Suffix				
		V_{IN} = 2.6V		0.62	0.9	
		V_{IN} = 4.7V		0.75	1.3	
		30 Suffix				
		V_{IN} = 2.87V		0.65	0.9	
		V_{IN} = 5.0V		0.77	1.3	
		32 Suffix				
		V_{IN} = 3.08V		0.66	0.9	
		V_{IN} = 5.20V		0.79	1.3	
		45 Suffix				
		V_{IN} = 4.34V		0.70	1.0	
		V_{IN} = 6.0		0.85	1.4	
t_p	Propagation Delay Time Figure 7			60	300	μs

Copyright © 2003–2013, Texas Instruments Incorporated

Typical Performance Characteristics

Input Current vs. Input Voltage
LM8364BALMF45

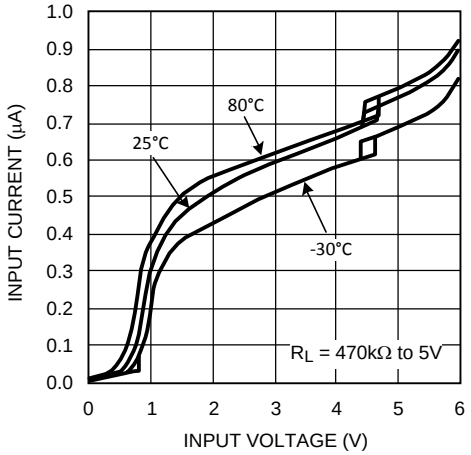

Figure 2.

$\overline{\text{Reset}}$ Output Voltage vs. Input Voltage
LM8364BALMF45

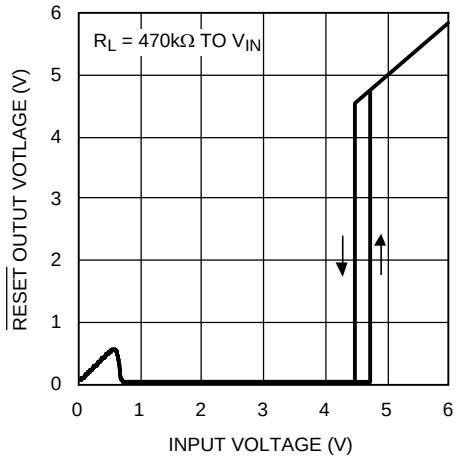

Figure 3.

$\overline{\text{Reset}}$ Output Sink Current vs. Input Voltage
LM8364BALMF45

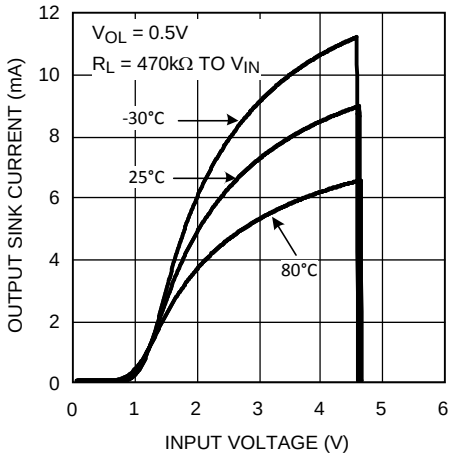

Figure 4.

$\overline{\text{Reset}}$ Output Sink Current vs. Output Voltage
LM8364BALMF45

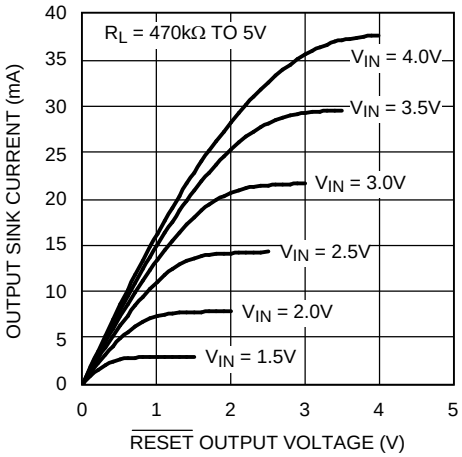

Figure 5.

Detector Threshold Voltage vs. Temperature
LM8364BALMF45

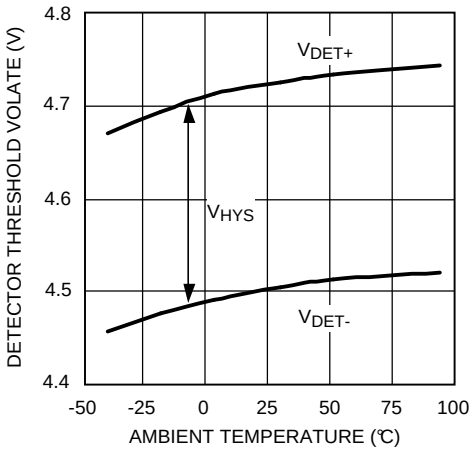

Figure 6.

Copyright © 2003–2013, Texas Instruments Incorporated

APPLICATION NOTES

The propagation delay time for the LM8364 is measured using a 470kΩ pull-up resistor connected to from the $\overline{\text{RESET}}$ output pin to 5V in addition to a 10pF capacitive load connected from the same pin to GND. Figure 7 shows the timing diagram for the measurement for the propagation delay. V_{DET+} is equal to the sum of the detector threshold, V_{DET-}, and the built in hysteresis, V_{HYS}.

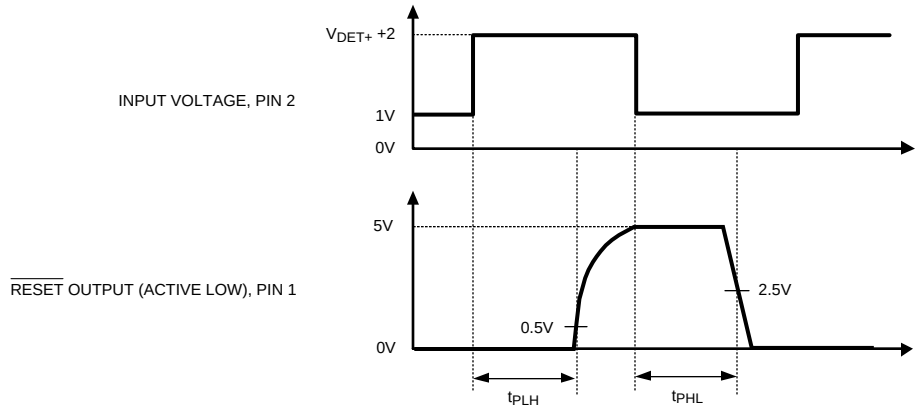

Figure 7. Propagation Delay Timing Diagrams

The LM8364 ultra-low current voltage detector was designed to monitor voltages and to provide an indication when the monitored voltage, V_{IN}, dropped below a precisely trimmed threshold voltage. This characteristic is displayed in the typical operating timing diagram below. V_{IN} is the voltage that is being monitored and a pull up resistor is connected from the $\overline{\text{RESET}}$ output pin to V_{IN}. V_{IN} is at some value above V_{DET+} and then begins to decrease. Since this is an Active Low device the $\overline{\text{RESET}}$ output is pulled High through the pull-up resistor and tracks V_{IN} until V_{IN} crosses the trimmed threshold V_{DET-}. At this point the LM8364 recognizes that V_{IN} is now in a fault condition and the output immediately changes to the Logic Low State. The $\overline{\text{RESET}}$ output will remain in this low state until V_{IN} increases above the threshold $V_{DET-} + V_{HYS}$. This point is also known as V_{DET+} as indicated earlier. This built-in hysteresis has been added to the design to help prevent erratic reset operation when the input voltage crosses the threshold.

The LM8364 has a wide variety of applications that can take advantage of its precision and low current consumption to monitor Input voltages even though it was designed as a reset controller in portable microprocessor based systems. It is a very cost effective and space saving device that will protect your more expensive investments of microprocessors and other devices that need a specified supply voltage for proper operation.

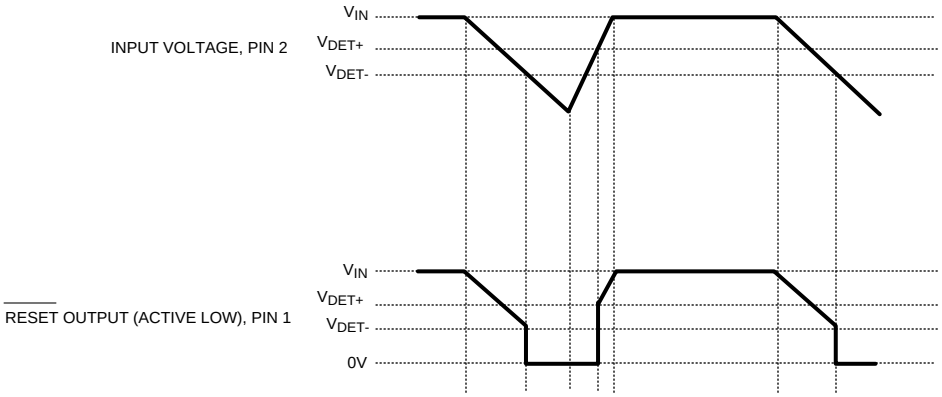

Figure 8. Timing Waveforms

Typical Applications

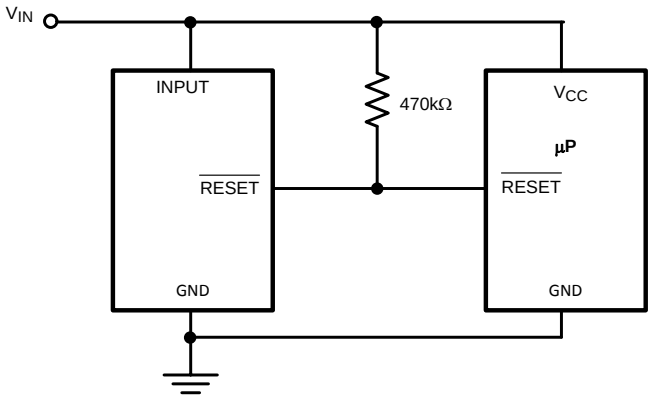

Figure 9. Microprocessor Reset Circuit

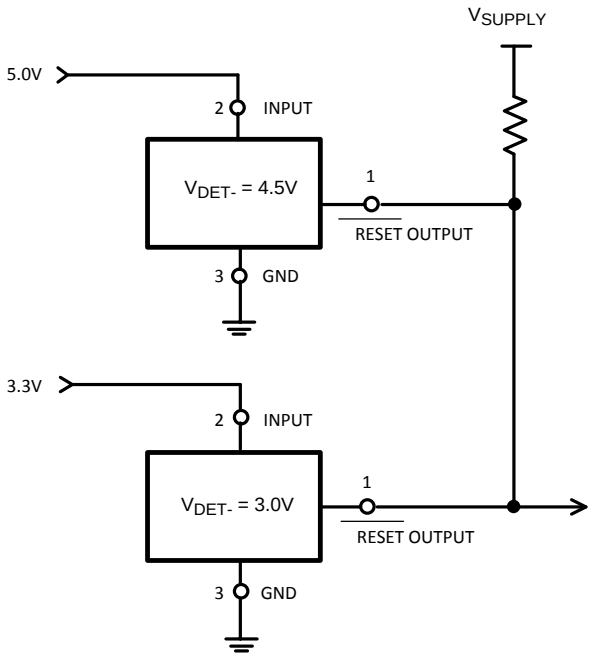

Figure 10. Dual Power Supply Undervoltage Supervision

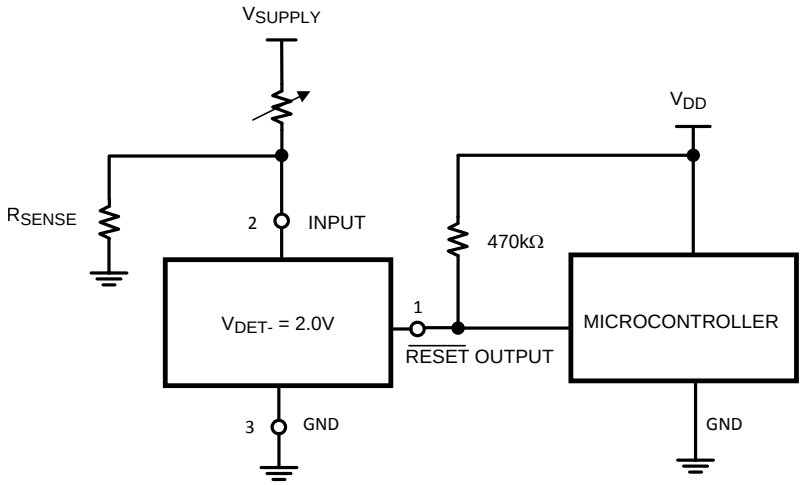

THIS CIRCUIT MONITORS THE CURRENT AT THE LOAD. AS CURRENT FLOW THROUGH THE LOAD, A VOLTAGE DROP WITH RESPECT TO GROUND APPEARS ACROSS R_{SENSE} WHERE $V_{SENSE} = I_{LOAD} * R_{SENSE}$. THE FOLLOWING CONDITIONS APPLY:

IF:	THEN:
$I_{LOAD} < V_{DET-} / R_{SENSE}$	$\overline{\text{RESET}}$ OUTPUT = 0V
$I_{LOAD} \geq (V_{DET-} + V_{HYS}) / R_{SENSE}$	$\overline{\text{RESET}}$ OUTPUT = V_{DD}

Figure 11. Microcontroller System Load Sensing

Copyright © 2003–2013, Texas Instruments Incorporated

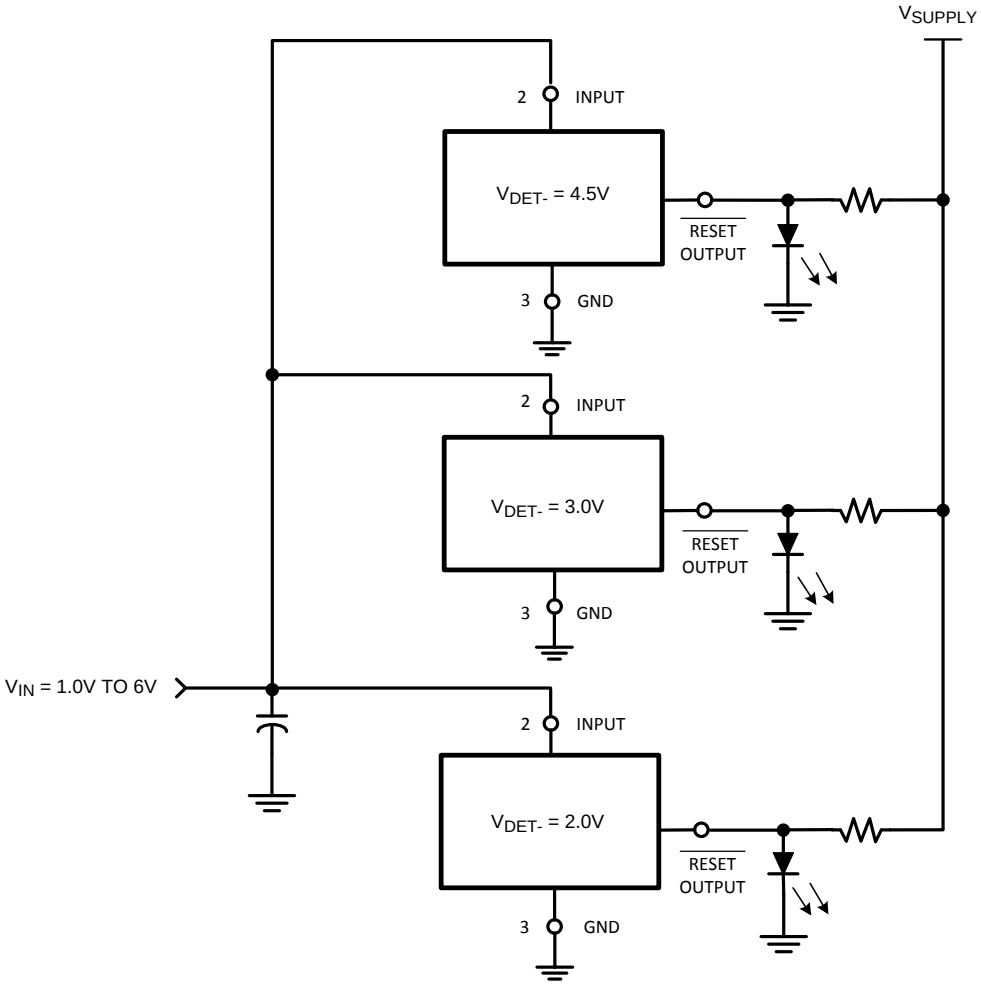

EACH LED WILL SEQUENTIALLY TURN ON WHEN THE RESPECTIVE VOLTAGE DETECTOR THRESHOLD (V_{DET-} +V_{HYS}) IS EXCEEDED.

Figure 12. LED Bar Graph Voltage Monitor

REVISION HISTORY

Changes from Revision A (April 2013) to Revision B	Page
• Changed layout of National Data Sheet to TI format	7

Copyright © 2003–2013, Texas Instruments Incorporated

PACKAGING INFORMATION

Orderable Device	Status (1)	Package Type	Package Drawing	Pins	Package Qty	Eco Plan (2)	Lead/Ball Finish (6)	MSL Peak Temp (3)	Op Temp (°C)	Device Marking (4/5)	Samples
LM8364BALMF20	NRND	SOT-23	DBV	5	1000	TBD	Call TI	Call TI	-40 to 85	F01A	
LM8364BALMF20/NOPB	ACTIVE	SOT-23	DBV	5	1000	Green (RoHS & no Sb/Br)	CU SN	Level-1-260C-UNLIM	-40 to 85	F01A	Samples
LM8364BALMFX20/NOPB	ACTIVE	SOT-23	DBV	5	3000	Green (RoHS & no Sb/Br)	CU SN	Level-1-260C-UNLIM	-40 to 85	F01A	Samples

(1) The marketing status values are defined as follows:
ACTIVE: Product device recommended for new designs.
LIFEBUY: TI has announced that the device will be discontinued, and a lifetime-buy period is in effect.
NRND: Not recommended for new designs. Device is in production to support existing customers, but TI does not recommend using this part in a new design.
PREVIEW: Device has been announced but is not in production. Samples may or may not be available.
OBSOLETE: TI has discontinued the production of the device.

(2) Eco Plan - The planned eco-friendly classification: Pb-Free (RoHS), Pb-Free (RoHS Exempt), or Green (RoHS & no Sb/Br) - please check http://www.ti.com/productcontent for the latest availability information and additional product content details.
TBD: The Pb-Free/Green conversion plan has not been defined.
Pb-Free (RoHS): TI's terms "Lead-Free" or "Pb-Free" mean semiconductor products that are compatible with the current RoHS requirements for all 6 substances, including the requirement that lead not exceed 0.1% by weight in homogeneous materials. Where designed to be soldered at high temperatures, TI Pb-Free products are suitable for use in specified lead-free processes.
Pb-Free (RoHS Exempt): This component has a RoHS exemption for either 1) lead-based flip-chip solder bumps used between the die and package, or 2) lead-based die adhesive used between the die and leadframe. The component is otherwise considered Pb-Free (RoHS compatible) as defined above.
Green (RoHS & no Sb/Br): TI defines "Green" to mean Pb-Free (RoHS compatible), and free of Bromine (Br) and Antimony (Sb) based flame retardants (Br or Sb do not exceed 0.1% by weight in homogeneous material)

(3) MSL, Peak Temp. - The Moisture Sensitivity Level rating according to the JEDEC industry standard classifications, and peak solder temperature.

(4) There may be additional marking, which relates to the logo, the lot trace code information, or the environmental category on the device.

(5) Multiple Device Markings will be inside parentheses. Only one Device Marking contained in parentheses and separated by a "~" will appear on a device. If a line is indented then it is a continuation of the previous line and the two combined represent the entire Device Marking for that device.

(6) Lead/Ball Finish - Orderable Devices may have multiple material finish options. Finish options are separated by a vertical ruled line. Lead/Ball Finish values may wrap to two lines if the finish value exceeds the maximum column width.

Important Information and Disclaimer: The information provided on this page represents TI's knowledge and belief as of the date that it is provided. TI bases its knowledge and belief on information provided by third parties, and makes no representation or warranty as to the accuracy of such information. Efforts are underway to better integrate information from third parties. TI has taken and

continues to take reasonable steps to provide representative and accurate information but may not have conducted destructive testing or chemical analysis on incoming materials and chemicals.
TI and TI suppliers consider certain information to be proprietary, and thus CAS numbers and other limited information may not be available for release.

In no event shall TI's liability arising out of such information exceed the total purchase price of the TI part(s) at issue in this document sold by TI to Customer on an annual basis.

TAPE AND REEL INFORMATION

REEL DIMENSIONS

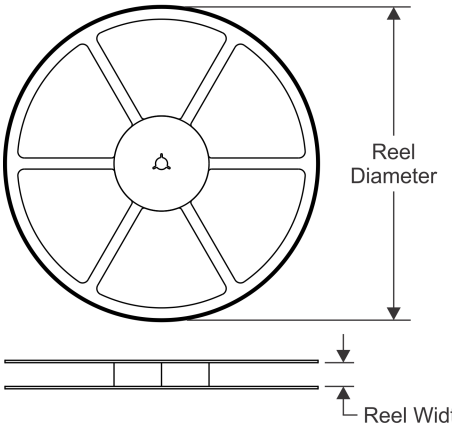

TAPE DIMENSIONS

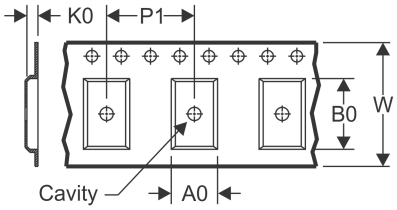

A0	Dimension designed to accommodate the component width
B0	Dimension designed to accommodate the component length
K0	Dimension designed to accommodate the component thickness
W	Overall width of the carrier tape
P1	Pitch between successive cavity centers

QUADRANT ASSIGNMENTS FOR PIN 1 ORIENTATION IN TAPE

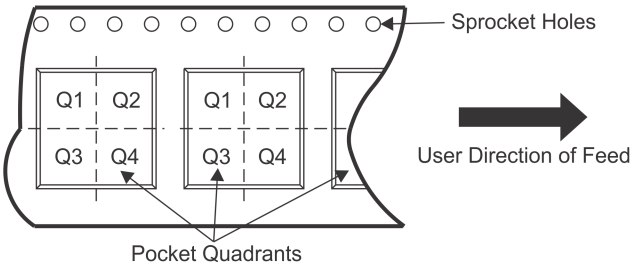

*All dimensions are nominal

Device	Package Type	Package Drawing	Pins	SPQ	Reel Diameter (mm)	Reel Width W1 (mm)	A0 (mm)	B0 (mm)	K0 (mm)	P1 (mm)	W (mm)	Pin1 Quadrant
LM8364BALMF20	SOT-23	DBV	5	1000	178.0	8.4	3.2	3.2	1.4	4.0	8.0	Q3
LM8364BALMF20/NOPB	SOT-23	DBV	5	1000	178.0	8.4	3.2	3.2	1.4	4.0	8.0	Q3
LM8364BALMFX20/NOPB	SOT-23	DBV	5	3000	178.0	8.4	3.2	3.2	1.4	4.0	8.0	Q3

TAPE AND REEL BOX DIMENSIONS

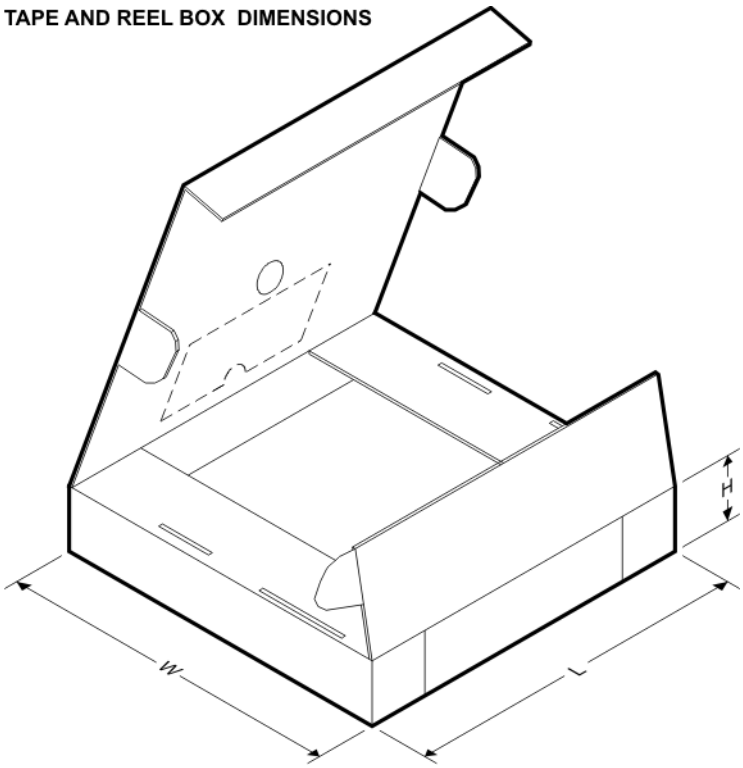

*All dimensions are nominal

Device	Package Type	Package Drawing	Pins	SPQ	Length (mm)	Width (mm)	Height (mm)
LM8364BALMF20	SOT-23	DBV	5	1000	210.0	185.0	35.0
LM8364BALMF20/NOPB	SOT-23	DBV	5	1000	210.0	185.0	35.0
LM8364BALMFX20/NOPB	SOT-23	DBV	5	3000	210.0	185.0	35.0

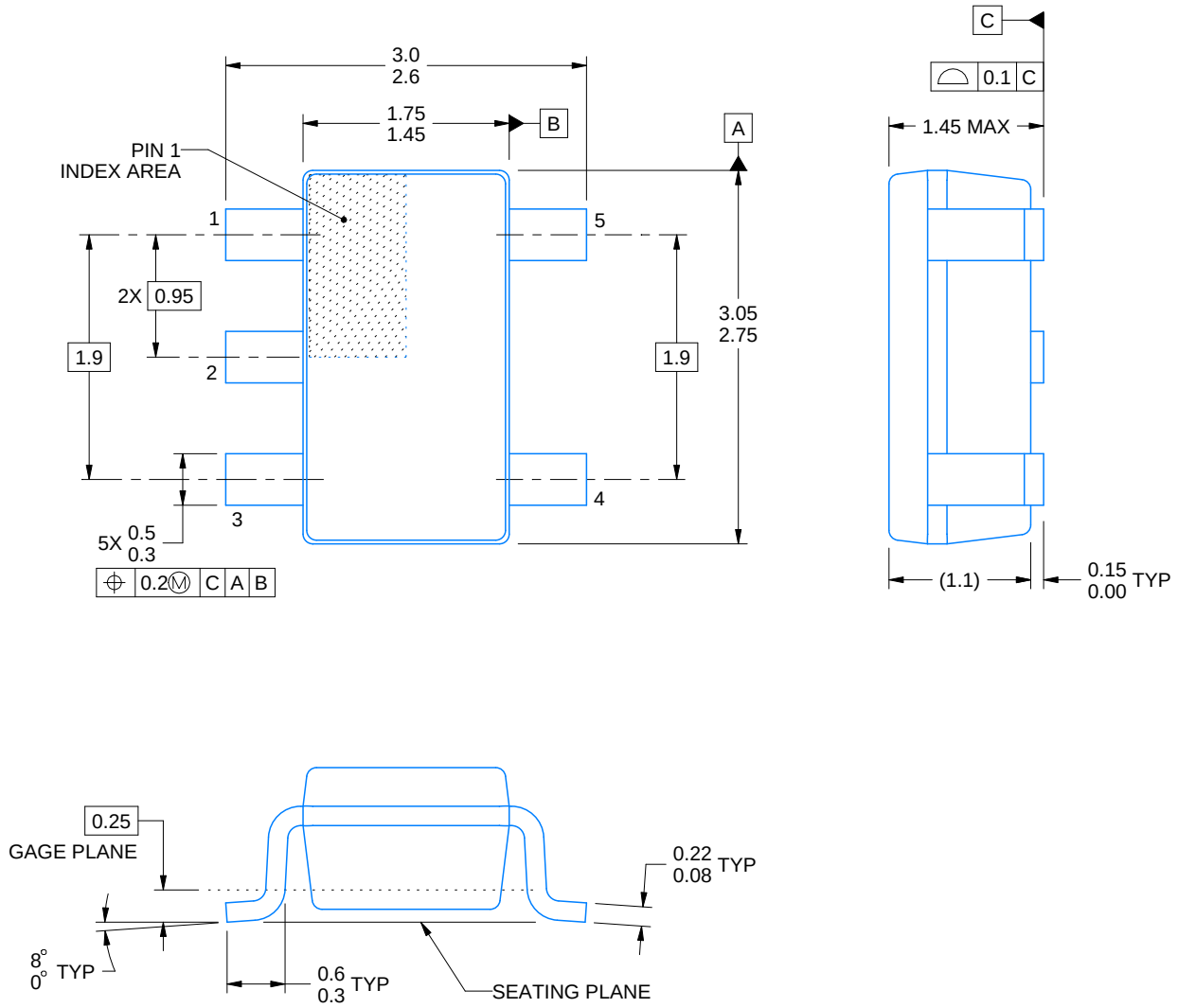

4214839/D 11/2018

NOTES:

1. All linear dimensions are in millimeters. Any dimensions in parenthesis are for reference only. Dimensioning and tolerancing per ASME Y14.5M.
2. This drawing is subject to change without notice.
3. Refernce JEDEC MO-178.
4. Body dimensions do not include mold flash, protrusions, or gate burrs. Mold flash, protrusions, or gate burrs shall not exceed 0.15 mm per side.

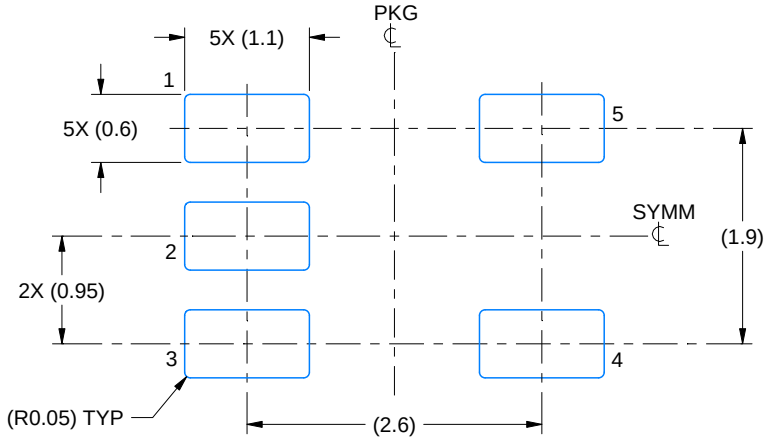

LAND PATTERN EXAMPLE
EXPOSED METAL SHOWN
SCALE:15X

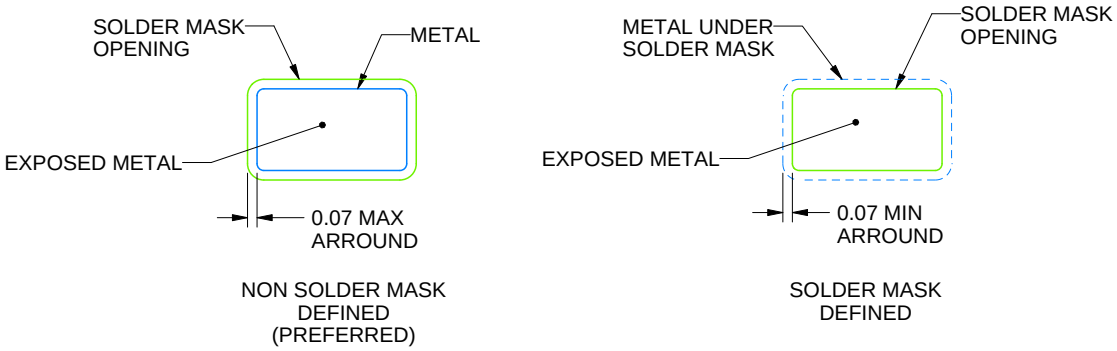

SOLDER MASK DETAILS

4214839/D 11/2018

NOTES: (continued)

5. Publication IPC-7351 may have alternate designs.
6. Solder mask tolerances between and around signal pads can vary based on board fabrication site.

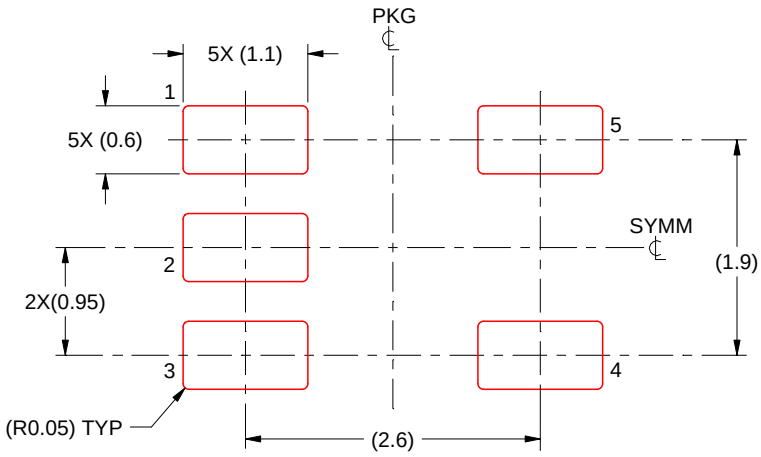

SOLDER PASTE EXAMPLE
BASED ON 0.125 mm THICK STENCIL
SCALE:15X

4214839/D 11/2018

NOTES: (continued)

7. Laser cutting apertures with trapezoidal walls and rounded corners may offer better paste release. IPC-7525 may have alternate design recommendations.
8. Board assembly site may have different recommendations for stencil design.

IMPORTANT NOTICE AND DISCLAIMER

TI PROVIDES TECHNICAL AND RELIABILITY DATA (INCLUDING DATASHEETS), DESIGN RESOURCES (INCLUDING REFERENCE DESIGNS), APPLICATION OR OTHER DESIGN ADVICE, WEB TOOLS, SAFETY INFORMATION, AND OTHER RESOURCES “AS IS” AND WITH ALL FAULTS, AND DISCLAIMS ALL WARRANTIES, EXPRESS AND IMPLIED, INCLUDING WITHOUT LIMITATION ANY IMPLIED WARRANTIES OF MERCHANTABILITY, FITNESS FOR A PARTICULAR PURPOSE OR NON-INFRINGEMENT OF THIRD PARTY INTELLECTUAL PROPERTY RIGHTS.

These resources are intended for skilled developers designing with TI products. You are solely responsible for (1) selecting the appropriate TI products for your application, (2) designing, validating and testing your application, and (3) ensuring your application meets applicable standards, and any other safety, security, or other requirements. These resources are subject to change without notice. TI grants you permission to use these resources only for development of an application that uses the TI products described in the resource. Other reproduction and display of these resources is prohibited. No license is granted to any other TI intellectual property right or to any third party intellectual property right. TI disclaims responsibility for, and you will fully indemnify TI and its representatives against, any claims, damages, costs, losses, and liabilities arising out of your use of these resources.

TI’s products are provided subject to TI’s Terms of Sale (www.ti.com/legal/termsofsale.html) or other applicable terms available either on ti.com or provided in conjunction with such TI products. TI’s provision of these resources does not expand or otherwise alter TI’s applicable warranties or warranty disclaimers for TI products.

Mailing Address: Texas Instruments, Post Office Box 655303, Dallas, Texas 75265
Copyright © 2019, Texas Instruments Incorporated

Looking for pricing, stock, or lifecycle information?

Click below to explore more details on WIN SOURCE:

- View LM8364BALMF45/NOPB on WIN SOURCE
- Texas Instruments Information

Optimize Your Supply Chain with WIN SOURCE Solutions

- Global Sourcing Solution
- Obsolete Management
- Cost Control Management
- Shortage Management
- Alternative Solution
- Excess Inventory Management