THE DATASHEET OF

MAX14579EETA+T

www.win-source.net 0086-755-83957316

19-5964; Rev 0; 06/11

EVALUATION KIT AVAILABLE

Low-Power Headset Detectors with SEND/END Button Support

MAX14579E/MAX14579AE

General Description

The MAX14579E/MAX14579AE provide a simple solution for detecting the insertion and managing the operation of a 3.5mm stereo headset with a microphone. These devices integrate all circuitry required to detect SEND/END button press events and generate required microphone bias voltages.

The devices are managed with only three GPIOs from the host controller to select between call mode and standby mode, and monitor the SEND/END and jack insertion status. In call mode, the low-noise LDO is enabled to provide DC bias to the externally preamplified microphone. In standby mode, microphone low-power pulsing is enabled to reduce supply current while waiting for a SEND/END button press event. Two open-drain outputs signal the host controller when an insertion/removal or SEND/END button press event occurs.

The MAX14579E/MAX14579AE manage jack insertion detection by monitoring a 3.5mm socket with a normally open jack insertion switch.

The devices are available in an 8-pin TDFN package, and are fully specified over the -40°C to +85°C extended temperature range.

Features

- **3.5mm Jack Insertion Detection**
- **Simple Interface: One Input/Two Open-Drain Outputs**
- **Low-Power Microphone Mode**
- **Low-Noise, High-PSRR Microphone Bias Generator**
- **Click-and-Pop Suppression**
- **High-ESD Protection on MIC and DETIN Inputs ±15kV Human Body Model (HBM)**

Applications

Cell Phones

e-Readers

Tablet PCs

Ordering Information

PART	TEMP RANGE	PIN-PACKAGE
MAX14579EETA+	-40°C to +85°C	8 TDFN-EP*
MAX14579AEETA+**	-40°C to +85°C	8 TDFN-EP*

+Denotes a lead(Pb)-free/RoHS compliant package.
**EP = Exposed pad.*
***Future product—contact factory for availablity.*

Typical Operating Circuit

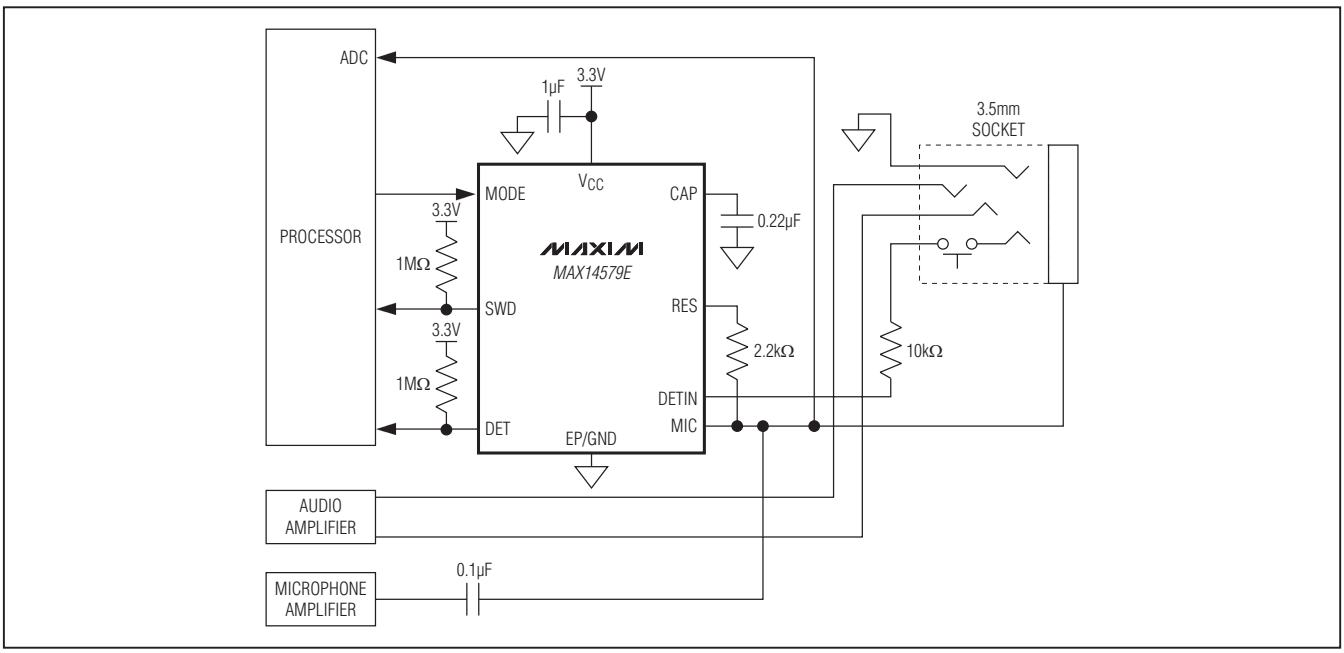

For pricing, delivery, and ordering information, please contact Maxim Direct at 1-888-629-4642, or visit Maxim's website at www.maxim-ic.com.

Low-Power Headset Detectors with SEND/END Button Support

ABSOLUTE MAXIMUM RATINGS

(Voltages referenced to ground.)
V_{CC}, MODE, SWD, DET .....-0.3V to +6V
CAP, MIC, DETIN, RES ..... -0.3V to (V_{CC} + 0.3V)
Continuous Current into Any Terminal ..... ±100mA
Continuous Power Dissipation (T_A = +70°C)
TDFN (derate 11.9mW/°C above +70°C) 953.5mW

Operating Temperature Range ..... -40°C to +85°C
Junction Temperature .....+150°C
Storage Temperature Range..... -65°C to +150°C
Lead Temperature (soldering, 10s) .....+300°C
Soldering Temperature (reflow) .....+260°C

Stresses beyond those listed under "Absolute Maximum Ratings" may cause permanent damage to the device. These are stress ratings only, and functional operation of the device at these or any other conditions beyond those indicated in the operational sections of the specifications is not implied. Exposure to absolute maximum rating conditions for extended periods may affect device reliability.

PACKAGE THERMAL CHARACTERISTICS (Note 1)

TDFN
Junction-to-Ambient Thermal Resistance (θ_{JA}).....83.9°C/W
Junction-to-Case Thermal Resistance (θ_{JC}).....37°C/W

Note 1: Package thermal resistances were obtained using the method described in JEDEC specification JESD51-7, using a four-layer board. For detailed information on package thermal considerations, refer to **www.maxim-ic.com/thermal-tutorial**.

ELECTRICAL CHARACTERISTICS

(V_{CC} = 2.5V to 5.5V, C_{DETIN} < 100pF, T_A = -40°C to +85°C, unless otherwise noted. Typical values are at V_{CC} = 3.6V, T_A = +25°C.) (Note 2)

PARAMETER	SYMBOL	CONDITIONS		MIN	TYP	MAX	UNITS
DC CHARACTERISTICS							
Supply Voltage Range	V_{CC}			2.5		5.5	V
V_{CC} Undervoltage-Lockout Threshold	V_{CCUVLO}	V_{CC} rising		0.9	1.7	2.45	V
V_{CC} Supply Current	I_{CC}	V_{CC} = 2.8V	MODE = low, DETIN = high		0.8	1.3	µA
			MODE = low, DETIN = low, I_{MIC} = 300µA		8	11	
			MODE = high, DETIN = low, I_{MIC} = 300µA		500	800	
DETIN Pullup Resistance	R_{DETIN}				1000		kΩ
Internal Microphone Bias Voltage	V_{BIAS}	MODE = low			V_{CC}		V
		MODE = high, DETIN = low			2.2		
MIC SEND/END Detection Threshold				0.20 x V_{BIAS}	0.22 x V_{BIAS}	0.24 x V_{BIAS}	V
DETIN Detection Threshold		Falling edge		1/3 x V_{CC}	1/2 x V_{CC}	2/3 x V_{CC}	V

ELECTRICAL CHARACTERISTICS (continued)

(V_{CC} = 2.5V to 5.5V, C_{DETIN} < 100pF, T_A = -40°C to +85°C, unless otherwise noted. Typical values are at V_{CC} = 3.6V, T_A = +25°C.) (Note 2)

PARAMETER	SYMBOL	CONDITIONS		MIN	TYP	MAX	UNITS
LINEAR REGULATOR (CAP)							
Minimum Bypass Capacitance	C_{OUT}			0.22			µF
Output Current Limit	I_{CAP}	V_{CAP} < V_{LDO}		4			mA
Output Voltage	V_{LDO}	V_{CC} = 2.8V		2.0	2.2	2.45	V
LDO PSRR	$PSRR_{LDO}$	Noise from V_{CC} to CAP, f = 217Hz, V_{CC} = 2.8V ±0.1V, I_{CAP} = 300µA, MODE = high			100		dB
LDO Noise	N_{LDO}	V_{CC} = 2.8V, I_{MIC} = 300µA, f = 100Hz to 4000Hz			11		μV_{RMS}
LDO Turn-Off Time	t_{OFF}	V_{CC} = 2.8V, R_L = 2kΩ, V_{CAP} from 90% to 10%			120		µs
DIGITAL SIGNALS (MODE, SWD, DET)							
Input-Voltage High	V_{IH}			1.4			V
Input-Voltage Low	V_{IL}					0.4	V
Input Leakage Current	I_{INLEAK}			-1		+1	µA
Output Logic-High Leakage Current (Open Drain)	I_{OH_LKG}	Output voltage = 5V				1	µA
Output Logic-Low	V_{OL}	I_{SINK} = 1mA				0.4	V
DYNAMIC CHARACTERISTICS							
MIC Low-Power Mode On-Time	t_{MICLPO}	R_{MIC} = 5kΩ, MPLP			120		µs
MIC Low-Power Mode Period	t_{MICLPP}	R_{MIC} = 5kΩ, MPLP			8		ms
DETIN Debounce Time	$t_{DETINDEB}$	Falling edge	MAX14579E		300		ms
			MAX14579AE		1000		
SEND/END Debounce Time	t_{SEDEB}				28		ms
ESD PROTECTION							
MIC, DETIN		Human Body Model			±15		kV
All Other Pins		Human Body Model			±2		kV

Note 2: All units are production tested at T_A = +25°C. Specifications over temperature are guaranteed by design.

Low-Power Headset Detectors with SEND/END Button Support

Typical Operating Characteristics

(MAX14579E, V_{CC} = 3.3V, T_A = +25°C, C_{DETIN} < 100pF, unless otherwise noted.)

V_{CC} SUPPLY CURRENT vs. VOLTAGE

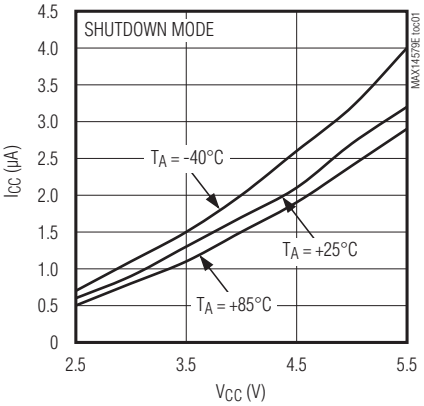

V_{CC} SUPPLY CURRENT vs. VOLTAGE

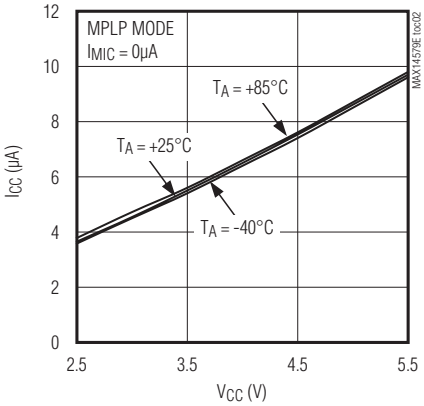

V_{CC} SUPPLY CURRENT vs. VOLTAGE

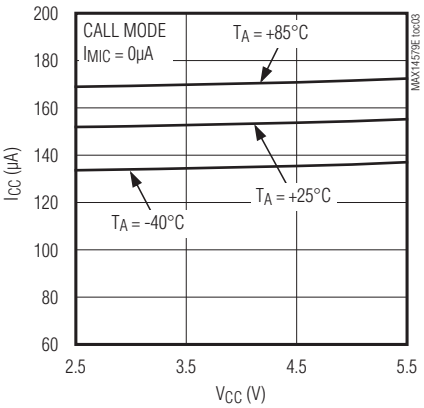

CAP VOLTAGE vs. V_{CC}

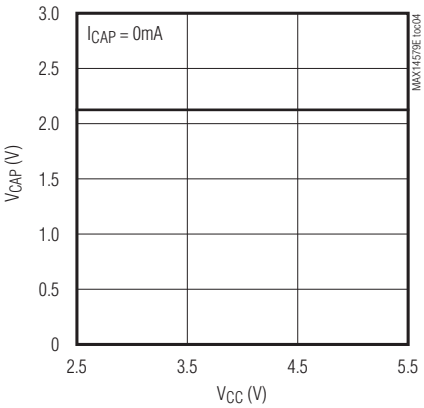

CAP VOLTAGE vs. CURRENT

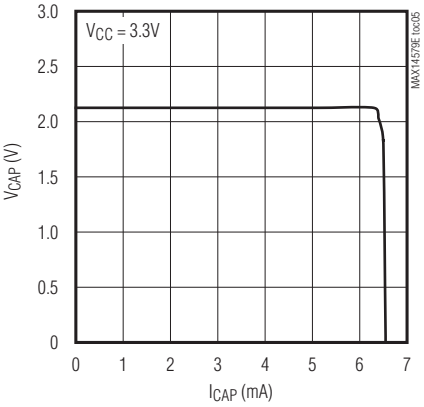

CAP VOLTAGE vs. TEMPERATURE

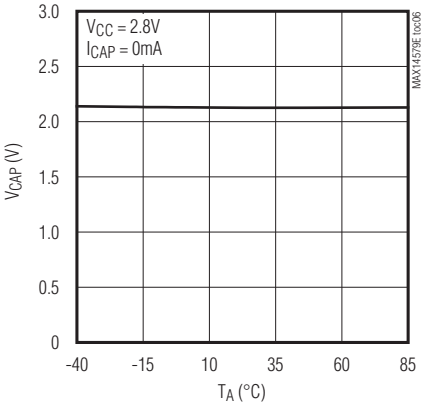

Typical Operating Characteristics (continued)

(MAX14579E, V_{CC} = 3.3V, T_A = +25°C, C_{DETIN} < 100pF, unless otherwise noted.)

CAP DROPOUT VOLTAGE vs. CAP CURRENT

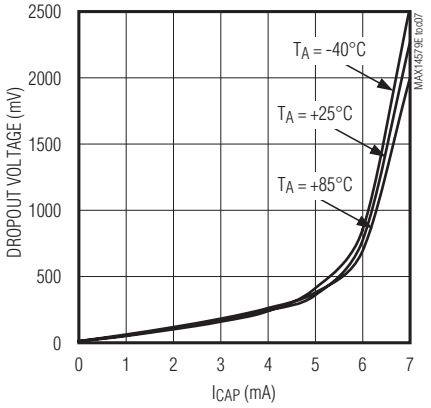

CAP POWER-SUPPLY REJECTION RATIO vs. FREQUENCY

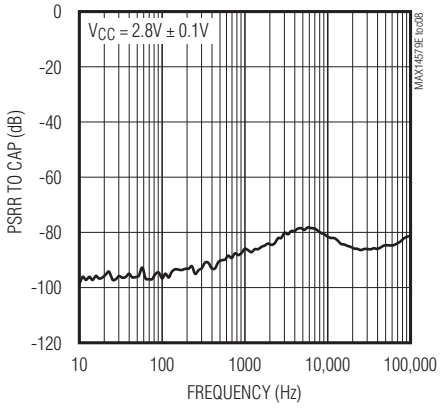

CAP NOISE DENSITY vs. FREQUENCY

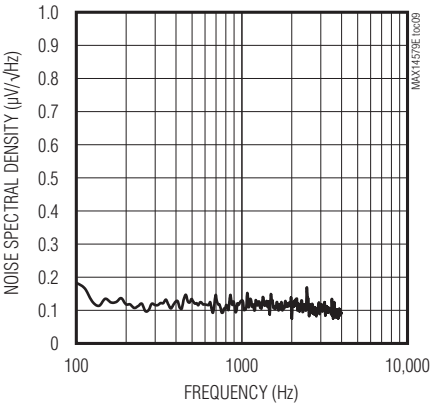

MICROPHONE LOW-POWER MODE OPERATION

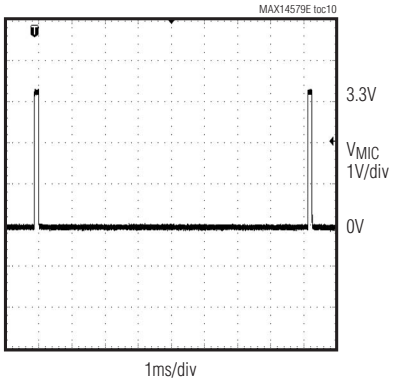

DETIN DEBOUNCE TIMING (MODE = LOW)

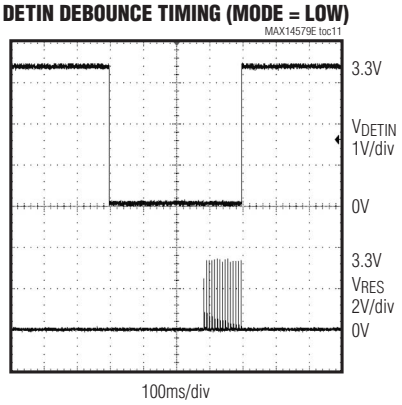

SWD DEBOUNCE TIMING

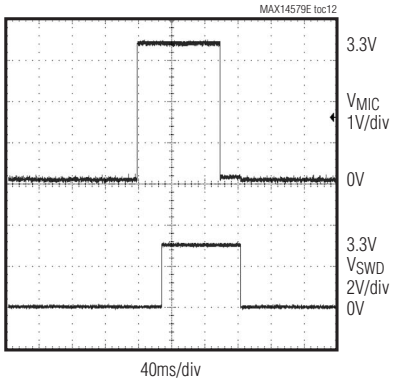

Low-Power Headset Detectors with SEND/END Button Support

Pin Configuration

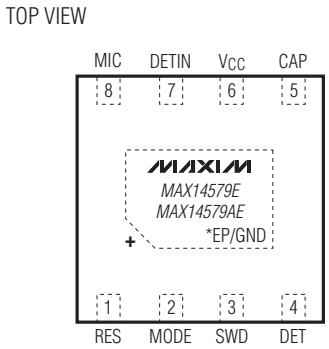

TDFN

*CONNECT THE EXPOSED PAD (EP/GND) TO THE GROUND PLANE.

Pin Description

PIN	NAME	FUNCTION
1	RES	Resistor Connection. Connect an external 2.2kΩ resistor from RES to MIC for microphone biasing.
2	MODE	Microphone Mode Control Input. MODE selects the operating mode. See the *MODE Control Input* section for more information.
3	SWD	SEND/END Button Detection Output. SWD asserts when a SEND/END button press event occurs. SWD is an active-low, open-drain output.
4	DET	Jack Insertion Detection Open-Drain Output. DET is asserted when there is a 3.5mm jack inserted into the socket. DET is an active-low output.
5	CAP	Internal LDO Output. Connect a 0.22µF ceramic (X5R, X7R, or better) capacitor between CAP and ground.
6	V_{CC}	Supply Voltage. Bypass V_{CC} to ground with a 1µF ceramic capacitor.
7	DETIN	Jack Insertion Detection Input. An internal comparator monitors DETIN for jack insertion/removal events.
8	MIC	Microphone Connection. During audio operation, a 2.2V bias voltage is supplied to MIC through RES. An internal comparator monitors MIC for SEND/END button press events.
—	EP	Exposed Pad. The exposed pad is the ground connection for the device. Connect EP/GND to the ground plane.

Functional Diagram

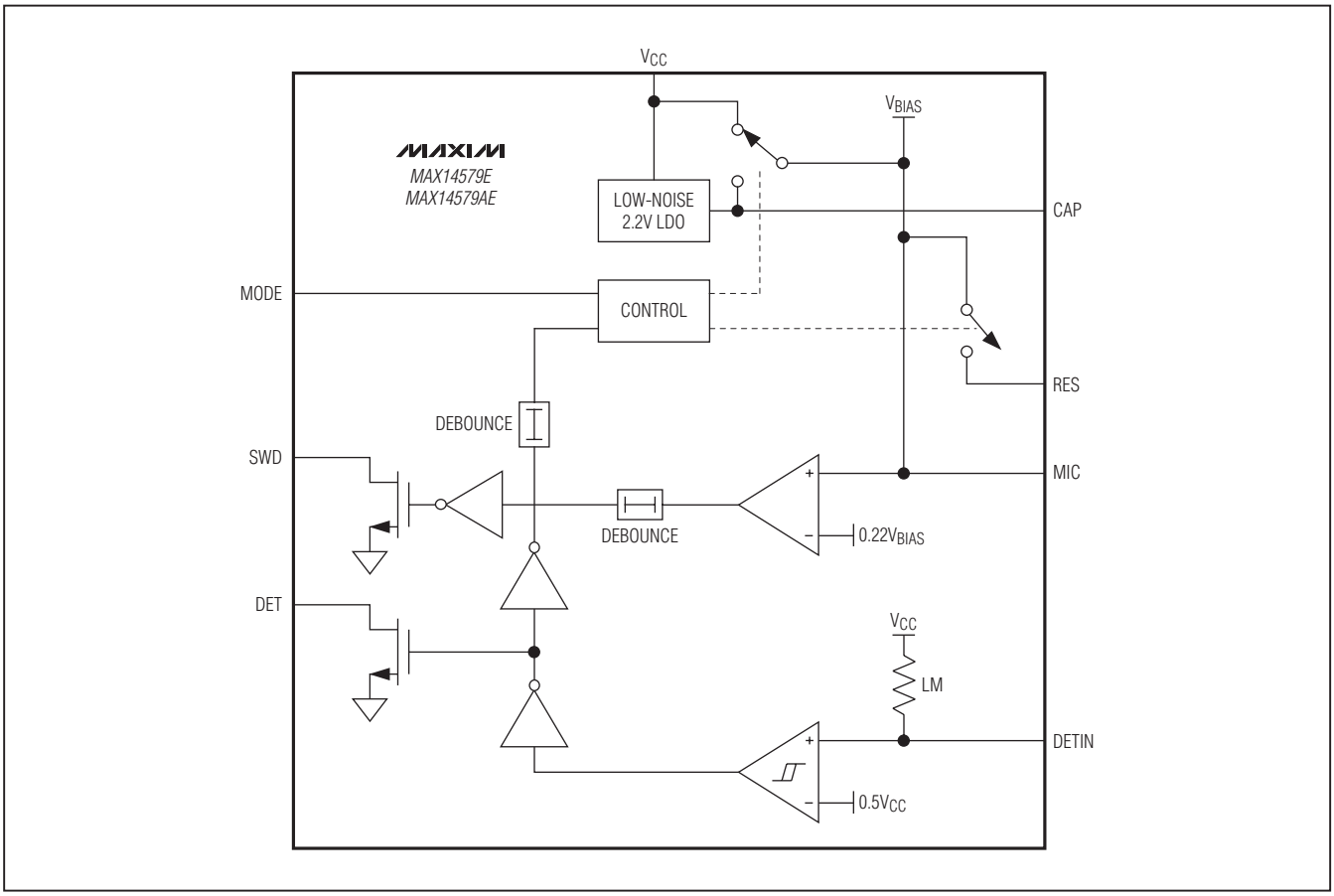

Detailed Description

The MAX14579E/MAX14579AE manage headsets by integrating 3.5mm jack insertion detection, microphone bias generation, and SEND/END button press detection. These devices feature a low-power microphone mode to reduce the high bias current required for microphone operation while it is not in use. The devices require only a single MODE input to select between call mode and low-power mode. See the *Jack Insertion Detection* section for details about the differences among the devices.

Internal LDO Regulator

The devices feature an internal low-noise, low-dropout regulator (LDO) for biasing the microphone connected to MIC. The LDO's output voltage is set at 2.2V. The LDO is enabled and enters low-noise mode when the MODE input is logic-high and a jack is detected. Pull the MODE input low to put the LDO in low-power shutdown mode.

Microphone Operation and Bias Voltage Generation

An externally preamplified microphone is connected to MIC. Connect MIC to RES through an external 2.2kΩ resistor to bias the microphone.

All the devices generate a bias voltage (V_{BIAS}) at RES. V_{BIAS} is generated either by the internal 2.2V (typ) LDO when the MODE input is logic-high or by V_{CC} when the MODE input is logic-low.

Microphone Low-Power Mode (MPLP)

A microphone draws a large amount of current due to the required bias resistor when it is connected. This current is dissipated even while the microphone is not in use. The ICs feature internal circuitry to reduce this current while simultaneously detecting SEND/END button press events.

Low-Power Headset Detectors with SEND/END Button Support

When microphone low-power mode (MPLP) is entered by pulling the MODE input low, the bias voltage is disconnected from the RES output and is reconnected for a short duration every 8ms (typ) to check for a SEND/END button press event. MPLP is exited when the MODE input transitions to logic-high.

Note that V_{BIAS} is permanently disconnected from RES when no jack is inserted and microphone low-power mode is not entered.

Jack Insertion Detection

The MAX14579E/MAX14579AE detect jack insertion/removal events by monitoring the DETIN input. Debounce circuitry ensures that transient voltages do not force the device to enter or exit MPLP due to false jack insertion/removal detection.

MAX14579E Detection

The MAX14579E/MAX14579AEs' DETIN input has an internal 1MΩ pullup resistor to V_{CC}. DETIN monitors a normally open insertion detection switch connected between DETIN and an audio line. DETIN is pulled high by the resistor, and DET is logic-high when no jack is inserted into the socket. DETIN is pulled low by the switch, and DET is logic-low when a jack is inserted.

Ensure that the total capacitance on DETIN is less than 100pF.

SEND/END Button Press Detection

The MAX14579E/MAX14579AE detect SEND/END button press events by monitoring the MIC input. A SEND/END button press is detected if the voltage at MIC falls below the MIC SEND/END detection threshold (0.22 x V_{BIAS} (typ)) for longer than the debounce time (typ). The SWD output is logic-low for the duration of the SEND/END button press event following the debounce period. The SEND/END detection circuitry is active whenever a jack is inserted.

The debounce period built into the SEND/END button press detection allows the mechanical SEND/END button to reach steady-state before applying the microphone bias. This mitigates click-and-pop noise.

MODE Control Input

An external host processor controls the MODE input. Table 1 shows the behavior of the device based on the MODE input and jack insertion status. The device enters call mode when MODE is logic-high and a jack is detected, enabling the LDO immediately in low-noise mode (LNM). The 2.2V (typ) LDO output powers V_{BIAS} and is connected to the microphone through an external 2.2kΩ bias resistor.

Pull MODE low to put the device in standby mode. In standby mode, V_{CC} powers V_{BIAS}, the LDO enters shutdown mode (SDM), and the microphone bias connection either turns off permanently if no jack is inserted or enters MPLP if a jack is inserted.

The MODE input is compatible with 1.8V logic with V_{CC} voltages up to 5.5V.

Applications Information

Typical Connections for 3.5mm Jacks

There are two typical 3.5mm jacks: tip-ring-ring-sleeve (TRRS) with four conductors (Figure 1a) and tip-ring-sleeve (TRS) with three conductors (Figure 1b). The most common configuration of the TRRS jack is to use rings 1 and 2 for audio signals, ring 3 for ground, and ring 4 for a microphone. The TRS jack typically uses rings 1 and 2 for audio signals and rings 3 and 4 as ground.

Table 1. Operating Modes

MODE	LOW		HIGH	
DETIN/MIC INSERTED	LOW	HIGH	LOW	HIGH
LDO Mode	SDM		LNM	SDM
MIC Bias Mode	MPLP	Off	2.2kΩ	Off

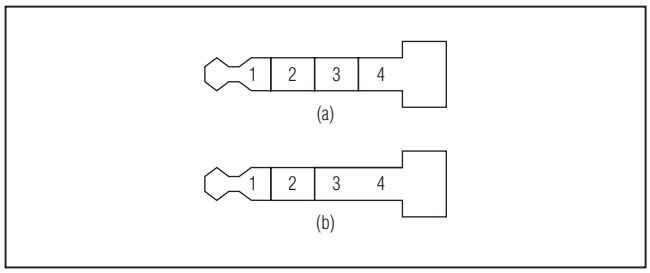

Figure 1. Typical 3.5mm Jacks

Supported Accessories

The devices support all standard configurations of headsets with a microphone and SEND/END button on a TRS or TRRS 3.5mm jack. Figure 2 shows the supported connections of the speakers, SEND/END button, and microphone to the jack.

Headset with No Microphone

When the 3.5mm jack in Figure 2a is inserted, the MIC input is pulled low permanently by the ground connection on the sleeve and the SWD output is logic-low permanently. This type of headset is supported by implementing a timeout period in software to recognize that the permanent logic-low is not due to a very long SEND/END button press event.

Headset with Microphone and Normally Open SEND/END Button in Parallel

When the 3.5mm jack in Figure 2b is inserted, the MIC input is pulled below the threshold only during a SEND/END button press event. The SWD output is logic-high when the SEND/END button is pressed for more than the debounce time.

Headset with Normally Open SEND/END Button and Resistive Remote Control

The devices support the 3.5mm jack with a microphone and two buttons in Figure 2c that is the standard Windows Mobile™ configuration. The threshold is set to detect a button press, regardless of which button is pressed.

High-ESD Protection

Electrostatic discharge (ESD)-protection structures are incorporated on all pins to protect against electrostatic discharges up to ±2kV Human Body Model (HBM) encountered during handling and assembly. DETIN and MIC are further protected against ESD up to ±15kV (HBM) without damage. After an ESD event, all the devices continue to function without latchup.

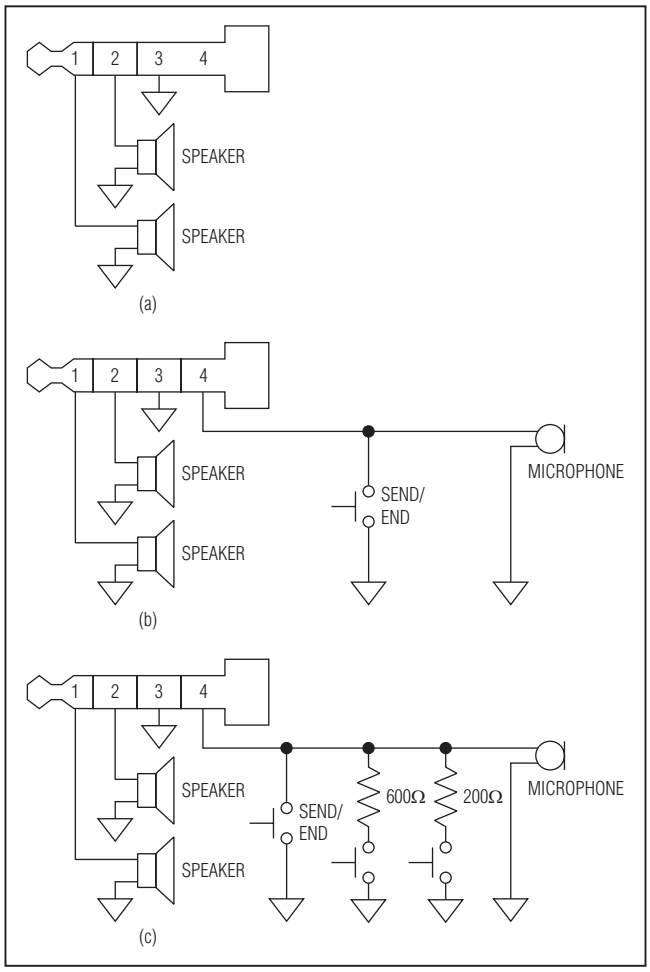

Figure 2. Supported 3.5mm Accessory Configurations

Windows Mobile is a registered trademark of Microsoft Corporation.

Low-Power Headset Detectors with SEND/END Button Support

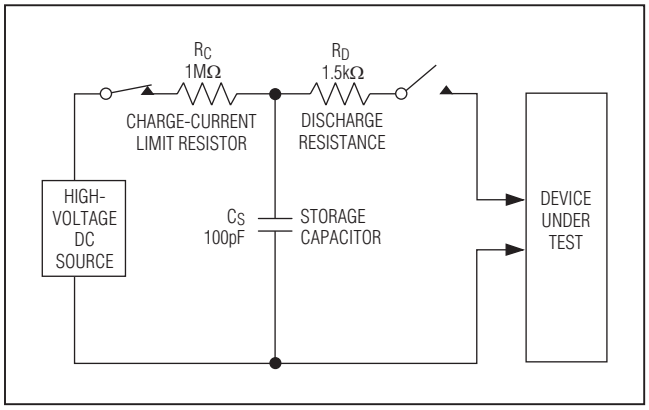

Figure 3. Human Body ESD Test Model

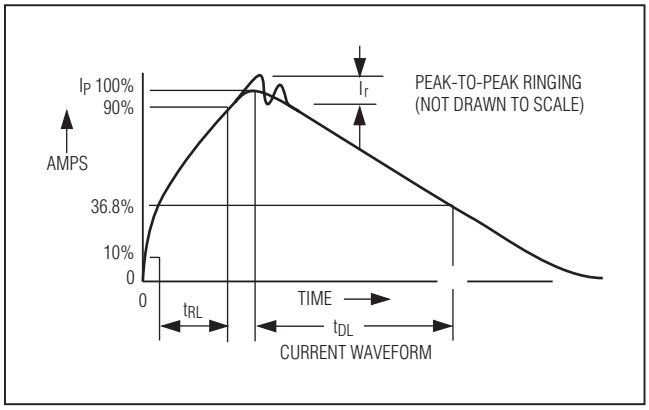

Figure 4. Human Body Current Waveform

ESD Test Conditions

ESD performance depends on a variety of conditions. Contact Maxim for a reliability report that documents test methodology, and results.

Human Body Model

Figure 3 shows the Human Body Model. Figure 4 shows the current waveform it generates when discharged into a low impedance. This model consists of a 100pF capacitor charged to the ESD voltage of interest that is then discharged into the device through a 1.5kΩ resistor.

Chip Information

PROCESS: BiCMOS

Package Information

For the latest package outline information and land patterns (footprints), go to **www.maxim-ic.com/packages**. Note that a "+", "#", or "-" in the package code indicates RoHS status only. Package drawings may show a different suffix character, but the drawing pertains to the package regardless of RoHS status.

PACKAGE TYPE	PACKAGE CODE	OUTLINE NO.	LAND PATTERN NO.
8 TDFN-EP	T822+2	21-0168	90-0065

Revision History

REVISION NUMBER	REVISION DATE	DESCRIPTION	PAGES CHANGED
0	6/11	Initial release	—

Maxim cannot assume responsibility for use of any circuitry other than circuitry entirely embodied in a Maxim product. No circuit patent licenses are implied. Maxim reserves the right to change the circuitry and specifications without notice at any time.

© 2011 Maxim Integrated Products Maxim is a registered trademark of Maxim Integrated Products, Inc.

Looking for pricing, stock, or lifecycle information?

Click below to explore more details on WIN SOURCE:

- View MAX14579EETA+T on WIN SOURCE
- Maxim Integrated Information

Optimize Your Supply Chain with WIN SOURCE Solutions

- Global Sourcing Solution
- Obsolete Management
- Cost Control Management
- Shortage Management
- Alternative Solution
- Excess Inventory Management