THE DATASHEET OF

SN74LVTH374NSR

www.win-source.net 0086-755-83957316

- **Support Mixed-Mode Signal Operation (5-V Input and Output Voltages With 3.3-V V_{CC})**
- **Typical V_{OLP} (Output Ground Bounce) <0.8 V at V_{CC} = 3.3 V, T_A = 25°C**
- **Support Unregulated Battery Operation Down to 2.7 V**
- **I_{off} and Power-Up 3-State Support Hot Insertion**
- **Bus Hold on Data Inputs Eliminates the Need for External Pullup/Pulldown Resistors**
- **Latch-Up Performance Exceeds 500 mA Per JESD 17**
- **ESD Protection Exceeds JESD 22**
  - **2000-V Human-Body Model (A114-A)**
  - **200-V Machine Model (A115-A)**

SN54LVTH374 . . . J OR W PACKAGE
SN74LVTH374 . . . DB, DW, NS, OR PW PACKAGE
(TOP VIEW)

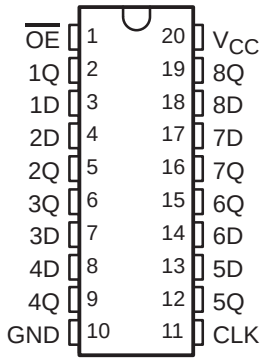

SN54LVTH374 . . . FK PACKAGE
(TOP VIEW)

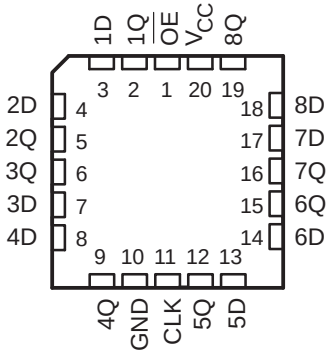

description/ordering information

These octal flip-flops are designed specifically for low-voltage (3.3-V) V_{CC} operation, but with the capability to provide a TTL interface to a 5-V system environment.

The eight flip-flops of the ’LVTH374 devices are edge-triggered D-type flip-flops. On the positive transition of the clock (CLK) input, the Q outputs are set to the logic levels set up at the data (D) inputs.

ORDERING INFORMATION

T_A	PACKAGE†		ORDERABLE PART NUMBER	TOP-SIDE MARKING
−40°C to 85°C	SOIC − DW	Tube	SN74LVTH374DW	LVTH374
		Tape and reel	SN74LVTH374DWR	
	SOP − NS	Tape and reel	SN74LVTH374NSR	LVTH374
	SSOP − DB	Tape and reel	SN74LVTH374DBR	LXH374
	TSSOP − PW	Tube	SN74LVTH374PW	LXH374
		Tape and reel	SN74LVTH374PWR	
−55°C to 125°C	CDIP − J	Tube	SNJ54LVTH374J	SNJ54LVTH374J
	CFP − W	Tube	SNJ54LVTH374W	SNJ54LVTH374W
	LCCC - FK	Tube	SNJ54LVTH374FK	SNJ54LVTH374FK

† Package drawings, standard packing quantities, thermal data, symbolization, and PCB design guidelines are available at www.ti.com/sc/package.

Please be aware that an important notice concerning availability, standard warranty, and use in critical applications of Texas Instruments semiconductor products and disclaimers thereto appears at the end of this data sheet.

PRODUCTION DATA information is current as of publication date. Products conform to specifications per the terms of Texas Instruments standard warranty. Production processing does not necessarily include testing of all parameters.

Copyright © 2003, Texas Instruments Incorporated
On products compliant to MIL-PRF-38535, all parameters are tested unless otherwise noted. On all other products, production processing does not necessarily include testing of all parameters.

description/ordering information (continued)

A buffered output-enable ($\overline{OE}$) input can be used to place the eight outputs in either a normal logic state (high or low logic levels) or the high-impedance state. In the high-impedance state, the outputs neither load nor drive the bus lines significantly. The high-impedance state and increased drive provide the capability to drive bus lines without need for interface or pullup components.

$\overline{OE}$ does not affect the internal operations of the flip-flops. Old data can be retained or new data can be entered while the outputs are in the high-impedance state.

When V_{CC} is between 0 and 1.5 V, the devices are in the high-impedance state during power up or power down. However, to ensure the high-impedance state above 1.5 V, $\overline{OE}$ should be tied to V_{CC} through a pullup resistor; the minimum value of the resistor is determined by the current-sinking capability of the driver.

Active bus-hold circuitry holds unused or undriven inputs at a valid logic state. Use of pullup or pulldown resistors with the bus-hold circuitry is not recommended.

These devices are fully specified for hot-insertion applications using I_{off} and power-up 3-state. The I_{off} circuitry disables the outputs, preventing damaging current backflow through the devices when they are powered down. The power-up 3-state circuitry places the outputs in the high-impedance state during power up and power down, which prevents driver conflict.

FUNCTION TABLE
(each flip-flop)

INPUTS			OUTPUT
$\overline{OE}$	CLK	D	Q
L	↑	H	H
L	↑	L	L
L	H or L	X	Q_0
H	X	X	Z

logic diagram (positive logic)

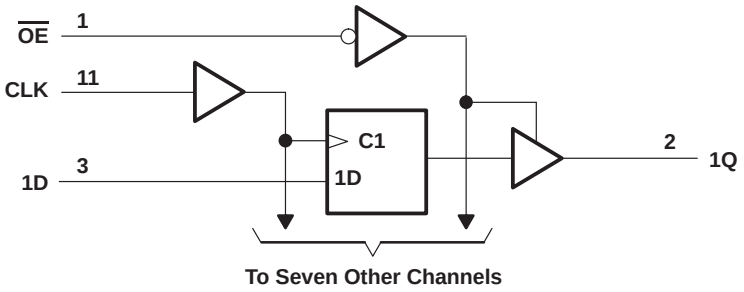

absolute maximum ratings over operating free-air temperature range (unless otherwise noted)†

Supply voltage range, V_{CC} . . . . . −0.5 V to 4.6 V
Input voltage range, V_I (see Note 1) . . . . . −0.5 V to 7 V
Voltage range applied to any output in the high-impedance
or power-off state, V_O (see Note 1) . . . . . −0.5 V to 7 V
Voltage range applied to any output in the high state, V_O (see Note 1) . . . . . −0.5 V to V_{CC} + 0.5 V
Current into any output in the low state, I_O: SN54LVTH374 . . . . . 96 mA
SN74LVTH374 . . . . . 128 mA
Current into any output in the high state, I_O (see Note 2): SN54LVTH374 . . . . . 48 mA
SN74LVTH374 . . . . . 64 mA
Input clamp current, I_{IK} (V_I < 0) . . . . . −50 mA
Output clamp current, I_{OK} (V_O < 0) . . . . . −50 mA
Package thermal impedance, θ_{JA} (see Note 3): DB package . . . . . 70°C/W
DW package . . . . . 58°C/W
NS package . . . . . 60°C/W
PW package . . . . . 83°C/W
Storage temperature range, T_{stg} . . . . . −65°C to 150°C

† Stresses beyond those listed under “absolute maximum ratings” may cause permanent damage to the device. These are stress ratings only, and functional operation of the device at these or any other conditions beyond those indicated under “recommended operating conditions” is not implied. Exposure to absolute-maximum-rated conditions for extended periods may affect device reliability.

NOTES: 1. The input and output negative-voltage ratings may be exceeded if the input and output clamp-current ratings are observed.
2. This current flows only when the output is in the high state and $V_O > V_{CC}$.
3. The package thermal impedance is calculated in accordance with JESD 51-7.

recommended operating conditions (see Note 4)

		SN54LVTH374		SN74LVTH374		UNIT
		MIN	MAX	MIN	MAX	
V_{CC}	Supply voltage	2.7	3.6	2.7	3.6	V
V_{IH}	High-level input voltage	2		2		V
V_{IL}	Low-level input voltage		0.8		0.8	V
V_I	Input voltage		5.5		5.5	V
I_{OH}	High-level output current		−24		−32	mA
I_{OL}	Low-level output current		48		64	mA
$\Delta t/\Delta v$	Input transition rise or fall rate		10		10	ns/V
$\Delta t/\Delta V_{CC}$	Power-up ramp rate	200		200		µs/V
T_A	Operating free-air temperature	−55	125	−40	85	°C

NOTE 4: All unused control inputs of the device must be held at V_{CC} or GND to ensure proper device operation. Refer to the TI application report, *Implications of Slow or Floating CMOS Inputs*, literature number SCBA004.

electrical characteristics over recommended operating free-air temperature range (unless otherwise noted)

PARAMETER		TEST CONDITIONS		SN54LVTH374			SN74LVTH374			UNIT
				MIN	TYP†	MAX	MIN	TYP†	MAX	
V_{IK}		V_{CC} = 2.7 V,	I_I = −18 mA			−1.2			−1.2	V
V_{OH}		V_{CC} = 2.7 V to 3.6 V,	I_{OH} = −100 µA	V_{CC}−0.2			V_{CC}−0.2			V
		V_{CC} = 2.7 V,	I_{OH} = −8 mA	2.4			2.4			
		V_{CC} = 3 V	I_{OH} = −24 mA	2						
			I_{OH} = −32 mA				2			
V_{OL}		V_{CC} = 2.7 V	I_{OL} = 100 µA			0.2			0.2	V
			I_{OL} = 24 mA			0.5			0.5	
		V_{CC} = 3 V	I_{OL} = 16 mA			0.4			0.4	
			I_{OL} = 32 mA			0.5			0.5	
			I_{OL} = 48 mA			0.55				
			I_{OL} = 64 mA						0.55	
I_I		V_{CC} = 0 or 3.6 V,	V_I = 5.5 V			10			10	µA
	Control inputs	V_{CC} = 3.6 V,	V_I = V_{CC} or GND			±1			±1	
	Data inputs	V_{CC} = 3.6 V	V_I = V_{CC}			1			1	
			V_I = 0			−5			−5	
I_{off}		V_{CC} = 0,	V_I or V_O = 0 to 4.5 V						±100	µA
$I_{I(hold)}$	Data inputs	V_{CC} = 3 V	V_I = 0.8 V	75			75			µA
			V_I = 2 V	−75			−75			
		V_{CC} = 3.6 V‡,	V_I = 0 to 3.6 V						500 −750	
I_{OZH}		V_{CC} = 3.6 V,	V_O = 3 V			5			5	µA
I_{OZL}		V_{CC} = 3.6 V,	V_O = 0.5 V			−5			−5	µA
I_{OZPU}		V_{CC} = 0 to 1.5 V, V_O = 0.5 V to 3 V, $\overline{OE}$ = don't care				±100*			±100	µA
I_{OZPD}		V_{CC} = 1.5 V to 0, V_O = 0.5 V to 3 V, $\overline{OE}$ = don't care				±100*			±100	µA
I_{CC}		V_{CC} = 3.6 V, I_O = 0, V_I = V_{CC} or GND	Outputs high			0.19			0.19	mA
			Outputs low			5			5	
			Outputs disabled			0.19			0.19	
ΔI_{CC}§		V_{CC} = 3 V to 3.6 V, One input at V_{CC} − 0.6 V, Other inputs at V_{CC} or GND				0.2			0.2	mA
C_i		V_I = 3 V or 0			3			3		pF
C_o		V_O = 3 V or 0			7			7		pF

* On products compliant to MIL-PRF-38535, this parameter is not production tested.
† All typical values are at V_{CC} = 3.3 V, T_A = 25°C.
‡ This is the bus-hold maximum dynamic current. It is the minimum overdrive current required to switch the input from one state to another.
§ This is the increase in supply current for each input that is at the specified TTL voltage level, rather than V_{CC} or GND.

timing requirements over recommended operating free-air temperature range (unless otherwise noted) (see Figure 1)

		SN54LVTH374				SN74LVTH374				UNIT
		V_{CC} = 3.3 V ± 0.3 V		V_{CC} = 2.7 V		V_{CC} = 3.3 V ± 0.3 V		V_{CC} = 2.7 V		
		MIN	MAX	MIN	MAX	MIN	MAX	MIN	MAX	
f_{clock}	Clock frequency		150		150		150		150	MHz
t_w	Pulse duration, CLK high or low	3.3		3.3		3.3		3.3		ns
t_{su}	Setup time, data before CLK↑	1.6		2		1.5		2		ns
t_h	Hold time, data after CLK↑	0.8		0.5		0.8		0		ns

switching characteristics over recommended ranges of supply voltage and operating free-air temperature, C_L = 50 pF (unless otherwise noted) (see Figure 1)

PARAMETER	FROM (INPUT)	TO (OUTPUT)	SN54LVTH374				SN74LVTH374					UNIT
			V_{CC} = 3.3 V ± 0.3 V		V_{CC} = 2.7 V		V_{CC} = 3.3 V ± 0.3 V			V_{CC} = 2.7 V		
			MIN	MAX	MIN	MAX	MIN	TYP†	MAX	MIN	MAX	
f_{max}			150		150		150			150		MHz
t_{PLH}	CLK	Q	1	5.1		5.6	1.8	2.9	4.5		5	ns
t_{PHL}			1.5	5.1		5.2	1.8	2.9	4.2		4.3	
t_{PZH}	$\overline{OE}$	Q	0.8	5.6		6.6	1.3	2.8	4.7		5.6	ns
t_{PZL}			1.2	5.4		6.2	1.6	3	4.7		5.2	
t_{PHZ}	$\overline{OE}$	Q	1.5	5.6		5.7	1.9	3	4.6		4.9	ns
t_{PLZ}			0.8	5.2		5.3	2	3.1	4.5		4.6	

† All typical values are at V_{CC} = 3.3 V, T_A = 25°C.

PARAMETER MEASUREMENT INFORMATION

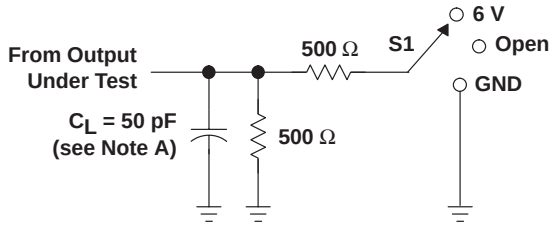

LOAD CIRCUIT

TEST	S1
t_{PLH}/t_{PHL}	Open
t_{PLZ}/t_{PZL}	6 V
t_{PHZ}/t_{PZH}	GND

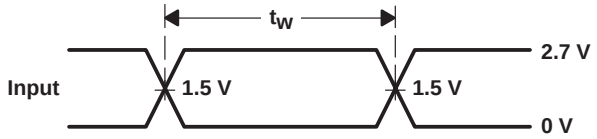

VOLTAGE WAVEFORMS
PULSE DURATION

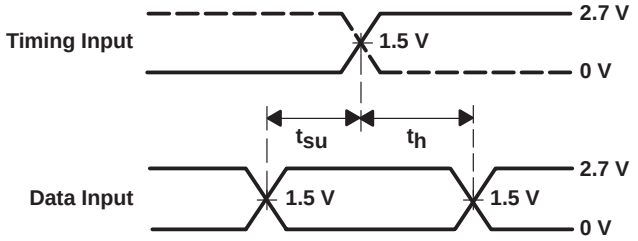

VOLTAGE WAVEFORMS
SETUP AND HOLD TIMES

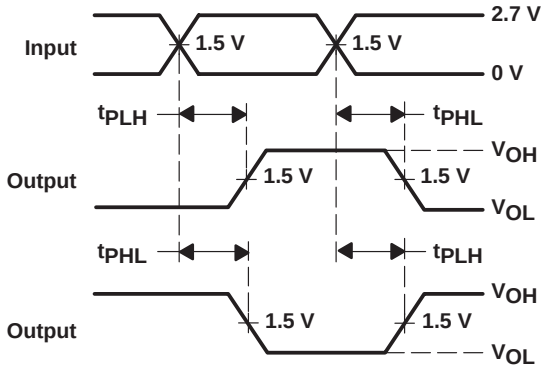

VOLTAGE WAVEFORMS
PROPAGATION DELAY TIMES
INVERTING AND NONINVERTING OUTPUTS

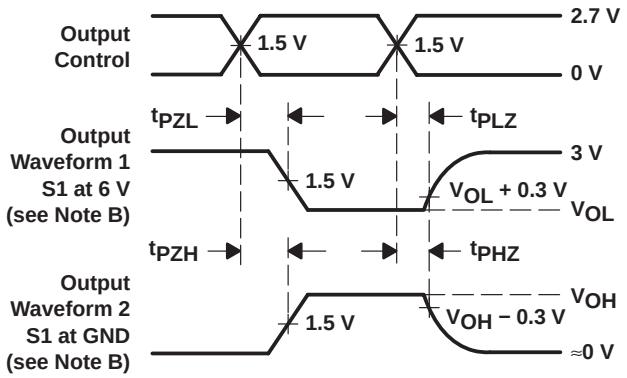

VOLTAGE WAVEFORMS
ENABLE AND DISABLE TIMES
LOW- AND HIGH-LEVEL ENABLING

NOTES: A. C_L includes probe and jig capacitance.
B. Waveform 1 is for an output with internal conditions such that the output is low except when disabled by the output control. Waveform 2 is for an output with internal conditions such that the output is high except when disabled by the output control.
C. All input pulses are supplied by generators having the following characteristics: PRR ≤ 10 MHz, Z_O = 50 Ω, t_r ≤ 2.5 ns, t_f ≤ 2.5 ns.
D. The outputs are measured one at a time with one transition per measurement.
E. All parameters and waveforms are not applicable to all devices.

Figure 1. Load Circuit and Voltage Waveforms

PACKAGING INFORMATION

Orderable Device	Status (1)	Package Type	Package Drawing	Pins	Package Qty	Eco Plan (2)	Lead/Ball Finish (6)	MSL Peak Temp (3)	Op Temp (°C)	Device Marking (4/5)	Samples
5962-9951001QSA	ACTIVE	CFP	W	20	1	TBD	A42	N / A for Pkg Type	-55 to 125	5962-9951001QS A SNJ54LVTH374W	Samples
SN74LVTH374DBR	ACTIVE	SSOP	DB	20	2000	Green (RoHS & no Sb/Br)	CU NIPDAU	Level-1-260C-UNLIM	-40 to 85	LXH374	Samples
SN74LVTH374DW	ACTIVE	SOIC	DW	20	25	Green (RoHS & no Sb/Br)	CU NIPDAU	Level-1-260C-UNLIM	-40 to 85	LVTH374	Samples
SN74LVTH374DWE4	ACTIVE	SOIC	DW	20	25	Green (RoHS & no Sb/Br)	CU NIPDAU	Level-1-260C-UNLIM	-40 to 85	LVTH374	Samples
SN74LVTH374DWR	ACTIVE	SOIC	DW	20	2000	Green (RoHS & no Sb/Br)	CU NIPDAU	Level-1-260C-UNLIM	-40 to 85	LVTH374	Samples
SN74LVTH374NSR	ACTIVE	SO	NS	20	2000	Green (RoHS & no Sb/Br)	CU NIPDAU	Level-1-260C-UNLIM	-40 to 85	LVTH374	Samples
SN74LVTH374PW	ACTIVE	TSSOP	PW	20	70	Green (RoHS & no Sb/Br)	CU NIPDAU	Level-1-260C-UNLIM	-40 to 85	LXH374	Samples
SN74LVTH374PWR	ACTIVE	TSSOP	PW	20	2000	Green (RoHS & no Sb/Br)	CU NIPDAU	Level-1-260C-UNLIM	-40 to 85	LXH374	Samples
SNJ54LVTH374W	ACTIVE	CFP	W	20	1	TBD	A42	N / A for Pkg Type	-55 to 125	5962-9951001QS A SNJ54LVTH374W	Samples

(1) The marketing status values are defined as follows:
ACTIVE: Product device recommended for new designs.
LIFEBUY: TI has announced that the device will be discontinued, and a lifetime-buy period is in effect.
NRND: Not recommended for new designs. Device is in production to support existing customers, but TI does not recommend using this part in a new design.
PREVIEW: Device has been announced but is not in production. Samples may or may not be available.
OBSOLETE: TI has discontinued the production of the device.

(2) **RoHS:** TI defines "RoHS" to mean semiconductor products that are compliant with the current EU RoHS requirements for all 10 RoHS substances, including the requirement that RoHS substance do not exceed 0.1% by weight in homogeneous materials. Where designed to be soldered at high temperatures, "RoHS" products are suitable for use in specified lead-free processes. TI may reference these types of products as "Pb-Free".
RoHS Exempt: TI defines "RoHS Exempt" to mean products that contain lead but are compliant with EU RoHS pursuant to a specific EU RoHS exemption.
Green: TI defines "Green" to mean the content of Chlorine (Cl) and Bromine (Br) based flame retardants meet JS709B low halogen requirements of <=1000ppm threshold. Antimony trioxide based flame retardants must also meet the <=1000ppm threshold requirement.

(3) MSL, Peak Temp. - The Moisture Sensitivity Level rating according to the JEDEC industry standard classifications, and peak solder temperature.

(4) There may be additional marking, which relates to the logo, the lot trace code information, or the environmental category on the device.

(5) Multiple Device Markings will be inside parentheses. Only one Device Marking contained in parentheses and separated by a "~" will appear on a device. If a line is indented then it is a continuation of the previous line and the two combined represent the entire Device Marking for that device.

(6) Lead/Ball Finish - Orderable Devices may have multiple material finish options. Finish options are separated by a vertical ruled line. Lead/Ball Finish values may wrap to two lines if the finish value exceeds the maximum column width.

Important Information and Disclaimer: The information provided on this page represents TI's knowledge and belief as of the date that it is provided. TI bases its knowledge and belief on information provided by third parties, and makes no representation or warranty as to the accuracy of such information. Efforts are underway to better integrate information from third parties. TI has taken and continues to take reasonable steps to provide representative and accurate information but may not have conducted destructive testing or chemical analysis on incoming materials and chemicals. TI and TI suppliers consider certain information to be proprietary, and thus CAS numbers and other limited information may not be available for release.

In no event shall TI's liability arising out of such information exceed the total purchase price of the TI part(s) at issue in this document sold by TI to Customer on an annual basis.

OTHER QUALIFIED VERSIONS OF SN54LVTH374, SN74LVTH374 :

- Catalog: SN74LVTH374
- Enhanced Product: SN74LVTH374-EP, SN74LVTH374-EP
- Military: SN54LVTH374

NOTE: Qualified Version Definitions:

- Catalog - TI's standard catalog product
- Enhanced Product - Supports Defense, Aerospace and Medical Applications
- Military - QML certified for Military and Defense Applications

TAPE AND REEL INFORMATION

REEL DIMENSIONS

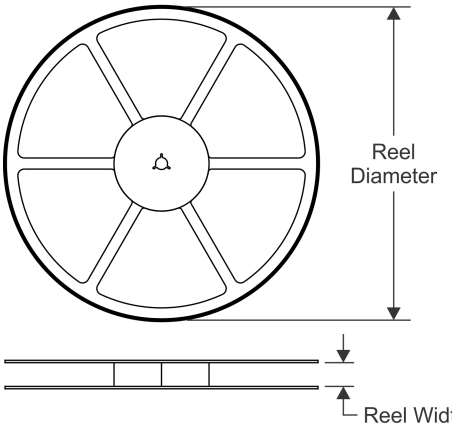

TAPE DIMENSIONS

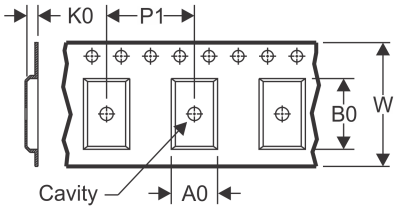

A0	Dimension designed to accommodate the component width
B0	Dimension designed to accommodate the component length
K0	Dimension designed to accommodate the component thickness
W	Overall width of the carrier tape
P1	Pitch between successive cavity centers

QUADRANT ASSIGNMENTS FOR PIN 1 ORIENTATION IN TAPE

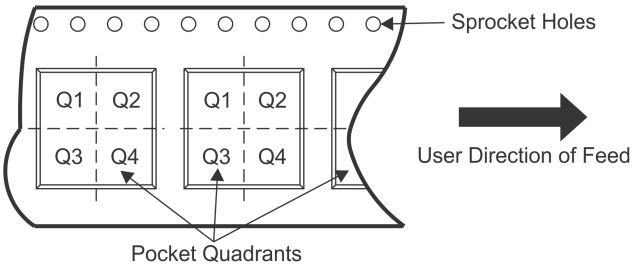

*All dimensions are nominal

Device	Package Type	Package Drawing	Pins	SPQ	Reel Diameter (mm)	Reel Width W1 (mm)	A0 (mm)	B0 (mm)	K0 (mm)	P1 (mm)	W (mm)	Pin1 Quadrant
SN74LVTH374DBR	SSOP	DB	20	2000	330.0	16.4	8.2	7.5	2.5	12.0	16.0	Q1
SN74LVTH374DWR	SOIC	DW	20	2000	330.0	24.4	10.8	13.3	2.7	12.0	24.0	Q1
SN74LVTH374NSR	SO	NS	20	2000	330.0	24.4	8.4	13.0	2.5	12.0	24.0	Q1
SN74LVTH374PWR	TSSOP	PW	20	2000	330.0	16.4	6.95	7.1	1.6	8.0	16.0	Q1

TAPE AND REEL BOX DIMENSIONS

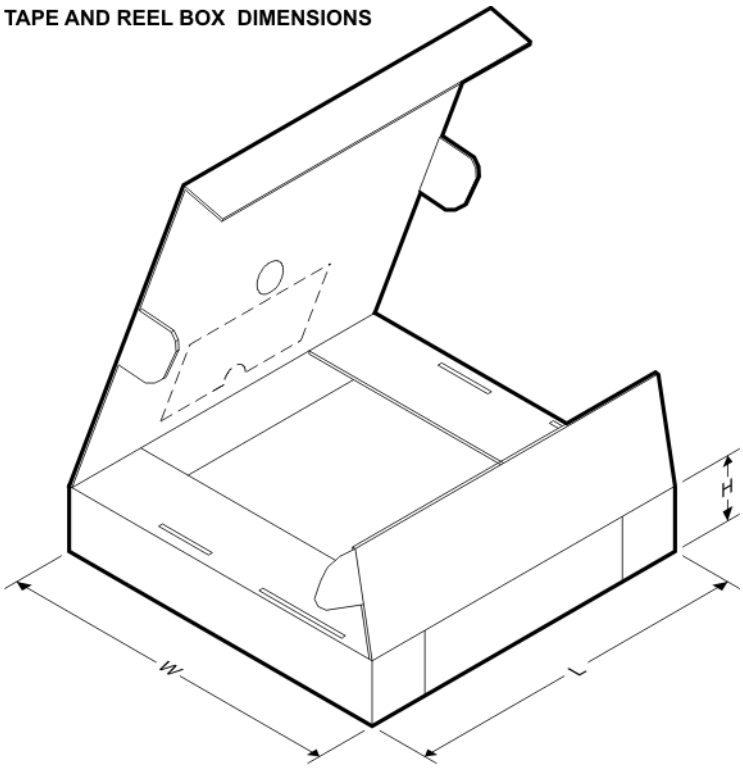

*All dimensions are nominal

Device	Package Type	Package Drawing	Pins	SPQ	Length (mm)	Width (mm)	Height (mm)
SN74LVTH374DBR	SSOP	DB	20	2000	367.0	367.0	38.0
SN74LVTH374DWR	SOIC	DW	20	2000	367.0	367.0	45.0
SN74LVTH374NSR	SO	NS	20	2000	367.0	367.0	45.0
SN74LVTH374PWR	TSSOP	PW	20	2000	367.0	367.0	38.0

MECHANICAL DATA

NS (R-PDSO-G)** **PLASTIC SMALL-OUTLINE PACKAGE**

14-PINS SHOWN

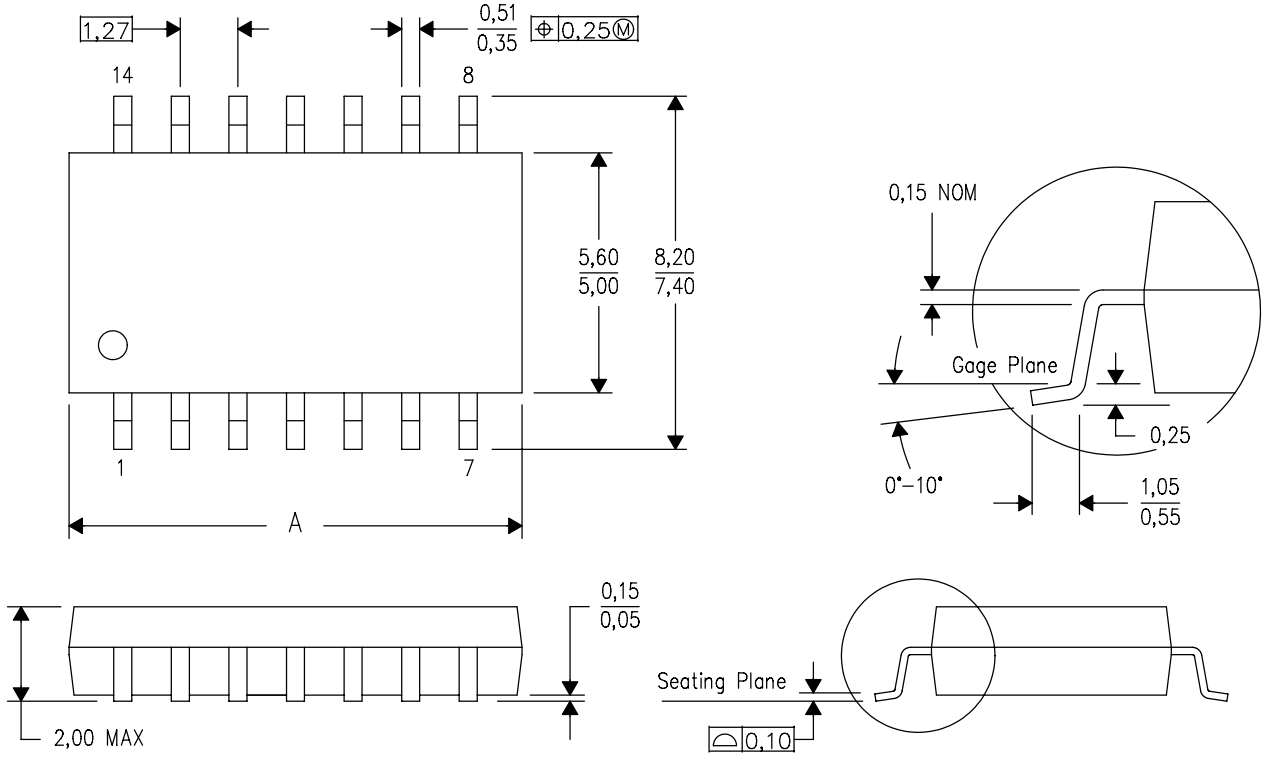

DIM \ PINS **	14	16	20	24
A MAX	10,50	10,50	12,90	15,30
A MIN	9,90	9,90	12,30	14,70

4040062/C 03/03

NOTES:
A. All linear dimensions are in millimeters.
B. This drawing is subject to change without notice.
C. Body dimensions do not include mold flash or protrusion, not to exceed 0,15.

PW (R-PDSO-G20) PLASTIC SMALL OUTLINE

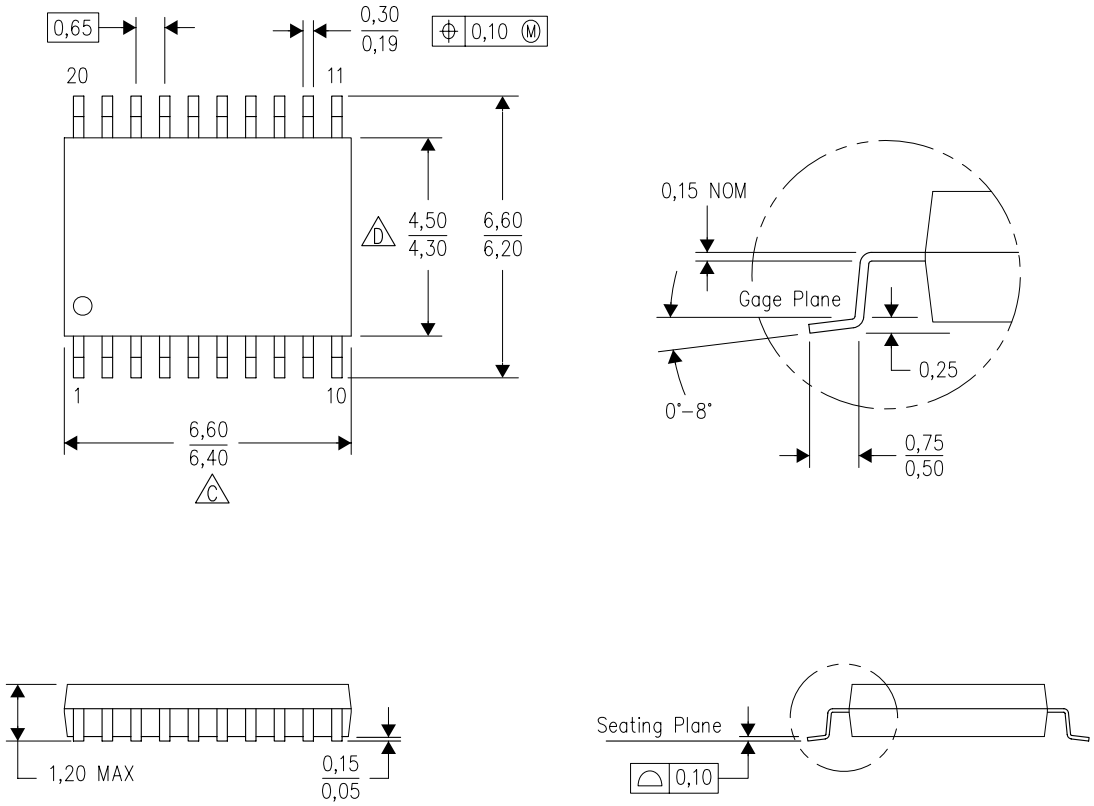

4040064-5/G 02/11

NOTES:
A. All linear dimensions are in millimeters. Dimensioning and tolerancing per ASME Y14.5M-1994.
B. This drawing is subject to change without notice.
C. Body length does not include mold flash, protrusions, or gate burrs. Mold flash, protrusions, or gate burrs shall not exceed 0,15 each side.
D. Body width does not include interlead flash. Interlead flash shall not exceed 0,25 each side.
E. Falls within JEDEC MO-153

PW (R–PDSO–G20) PLASTIC SMALL OUTLINE

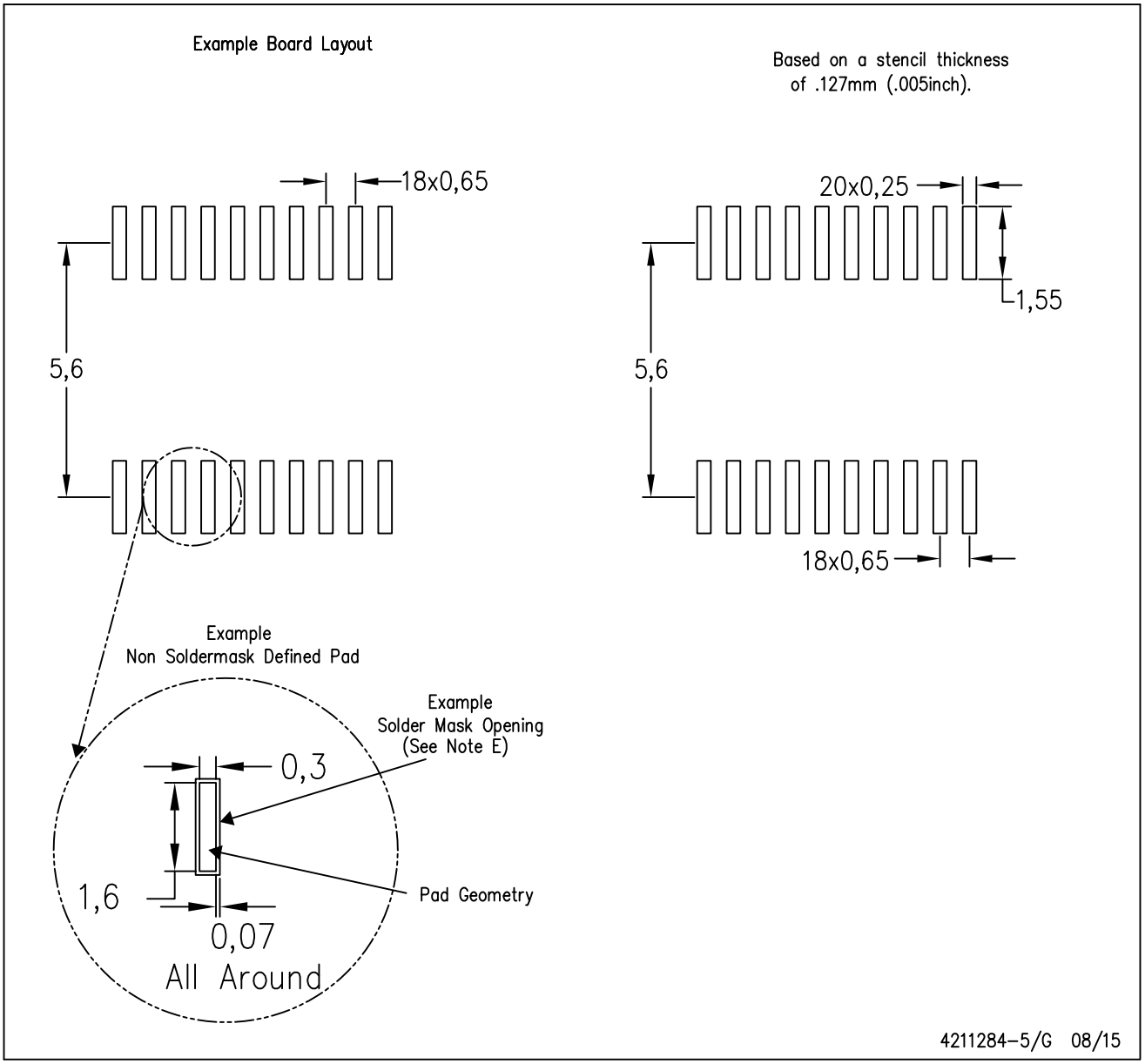

NOTES:
A. All linear dimensions are in millimeters.
B. This drawing is subject to change without notice.
C. Publication IPC–7351 is recommended for alternate design.
D. Laser cutting apertures with trapezoidal walls and also rounding corners will offer better paste release. Customers should contact their board assembly site for stencil design recommendations. Refer to IPC–7525 for other stencil recommendations.
E. Customers should contact their board fabrication site for solder mask tolerances between and around signal pads.

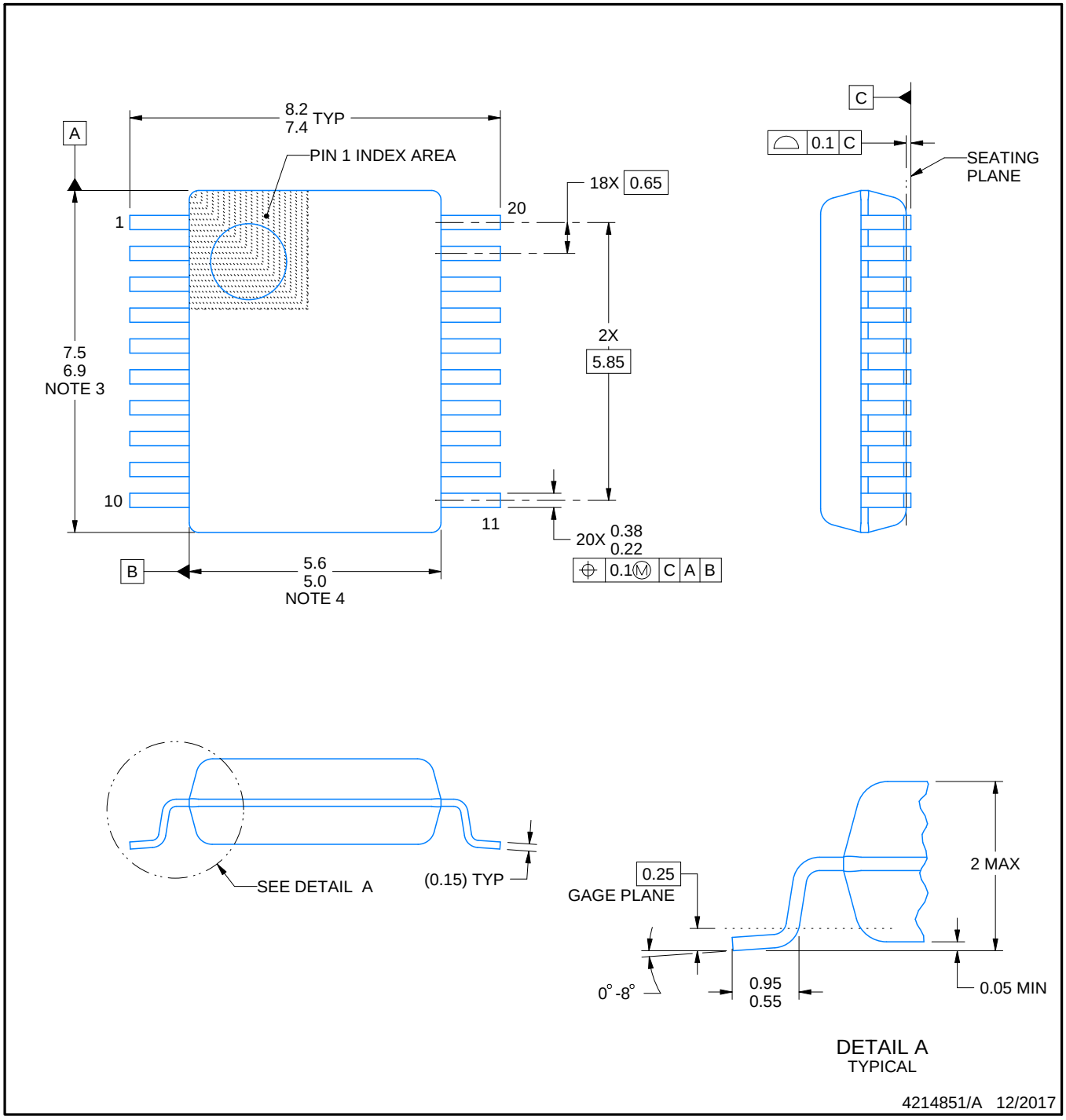

NOTES:

1. All linear dimensions are in millimeters. Any dimensions in parenthesis are for reference only. Dimensioning and tolerancing per ASME Y14.5M.
2. This drawing is subject to change without notice.
3. This dimension does not include mold flash, protrusions, or gate burrs. Mold flash, protrusions, or gate burrs shall not exceed 0.15 mm per side.
4. This dimension does not include interlead flash. Interlead flash shall not exceed 0.25 mm per side.
5. Reference JEDEC registration MO-150.

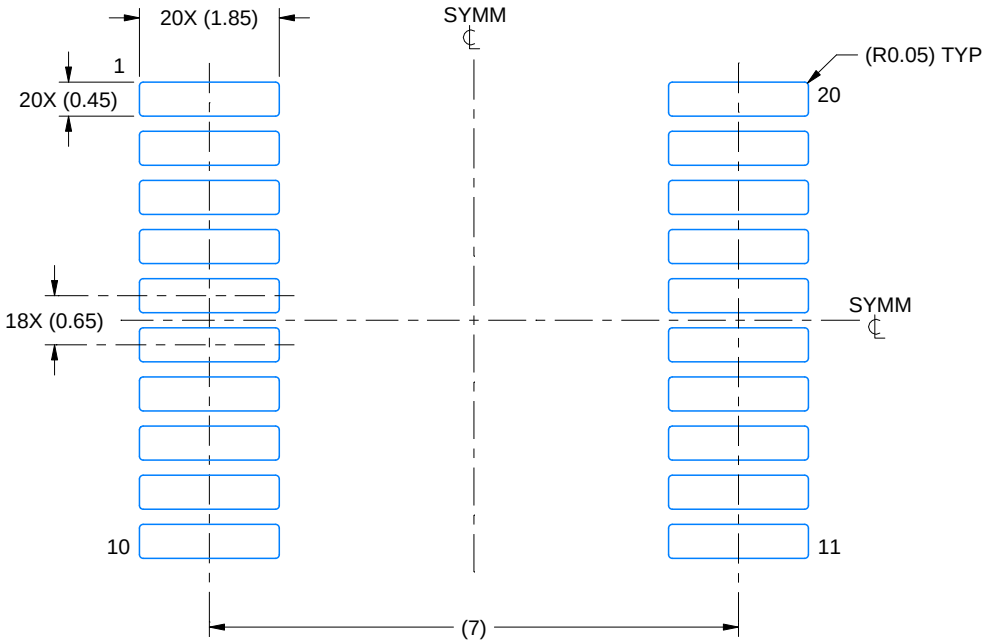

LAND PATTERN EXAMPLE
EXPOSED METAL SHOWN
SCALE: 10X

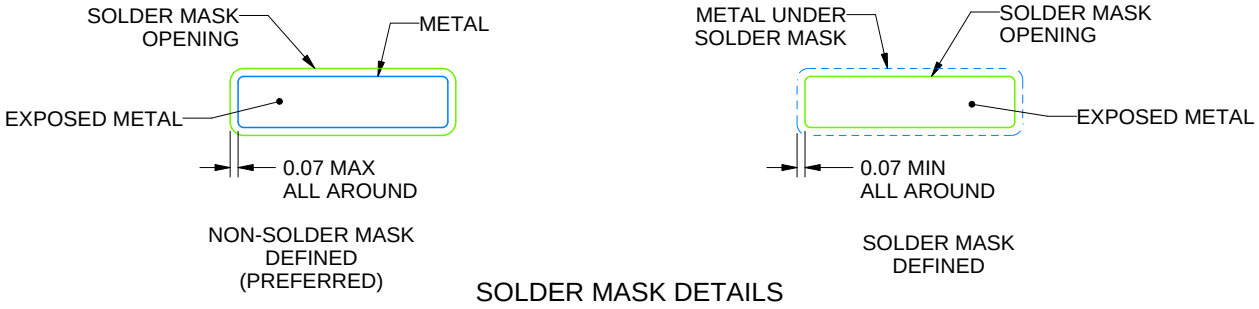

SOLDER MASK DETAILS

4214851/A 12/2017

NOTES: (continued)

6. Publication IPC-7351 may have alternate designs.
7. Solder mask tolerances between and around signal pads can vary based on board fabrication site.

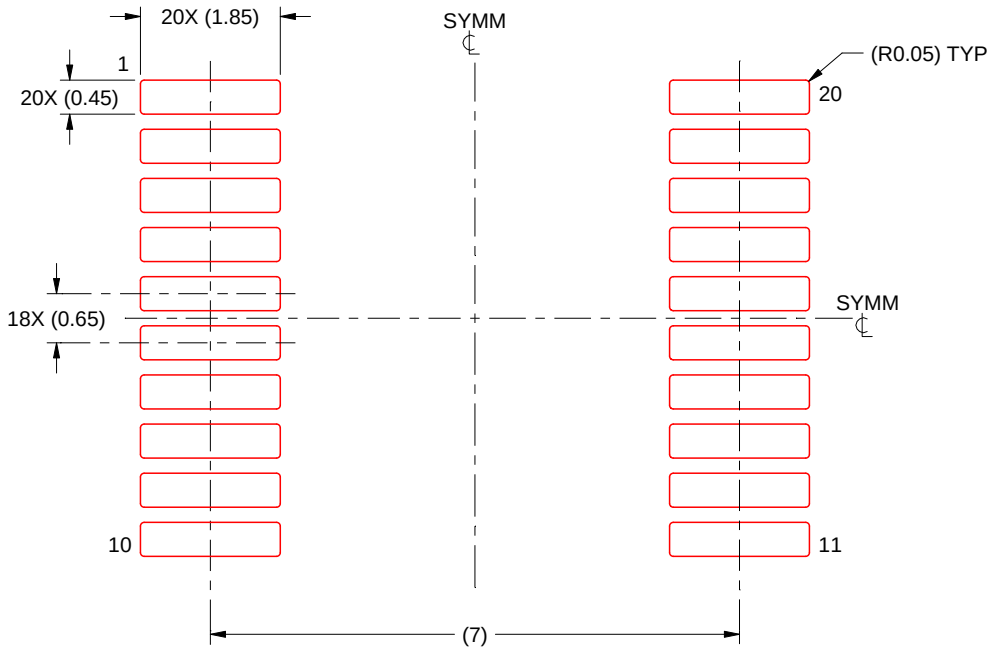

SOLDER PASTE EXAMPLE
BASED ON 0.125 mm THICK STENCIL
SCALE: 10X

4214851/A 12/2017

NOTES: (continued)

8. Laser cutting apertures with trapezoidal walls and rounded corners may offer better paste release. IPC-7525 may have alternate design recommendations.
9. Board assembly site may have different recommendations for stencil design.

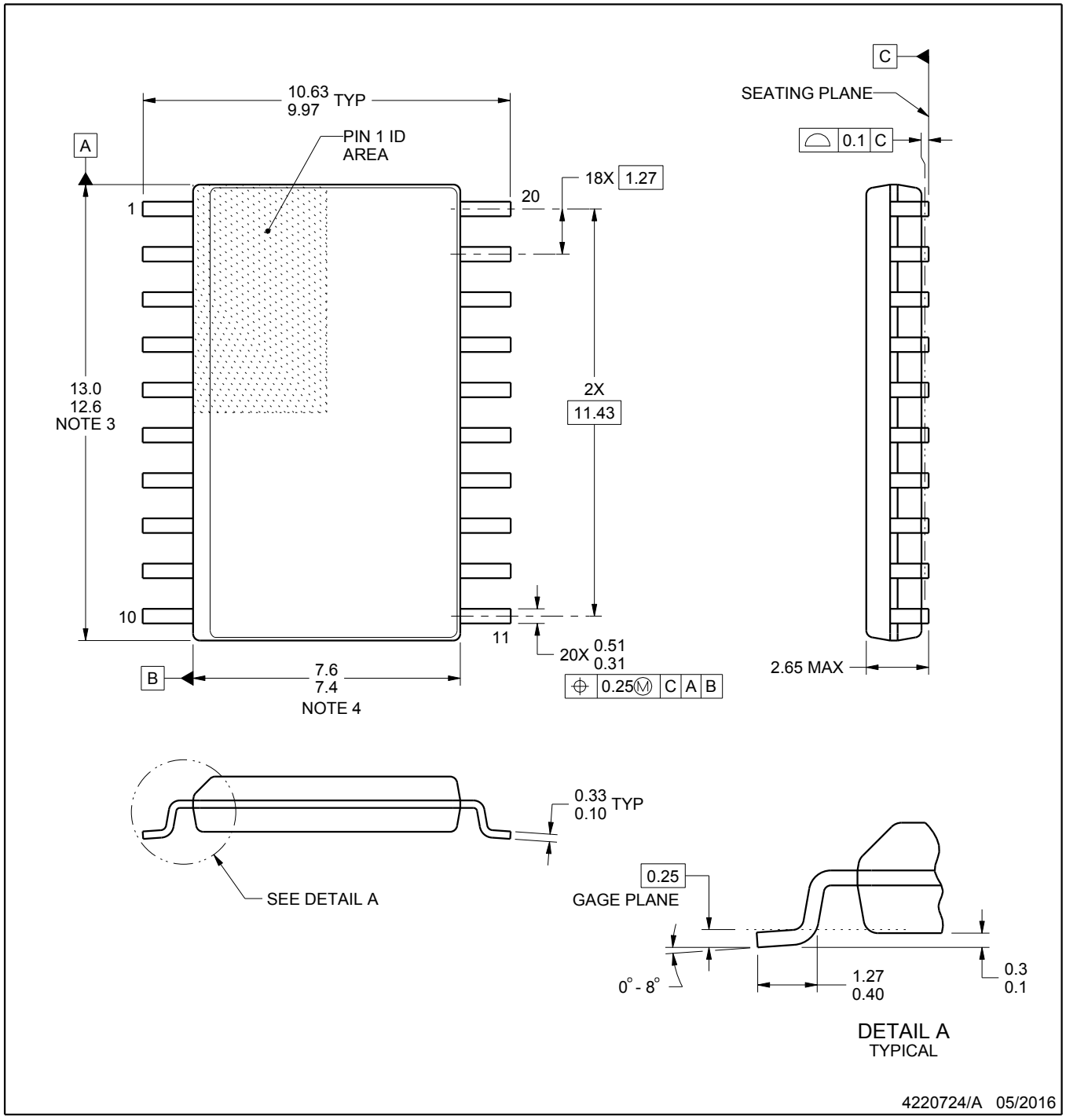

NOTES:

1. All linear dimensions are in millimeters. Dimensions in parenthesis are for reference only. Dimensioning and tolerancing per ASME Y14.5M.
2. This drawing is subject to change without notice.
3. This dimension does not include mold flash, protrusions, or gate burrs. Mold flash, protrusions, or gate burrs shall not exceed 0.15 mm per side.
4. This dimension does not include interlead flash. Interlead flash shall not exceed 0.43 mm per side.
5. Reference JEDEC registration MS-013.

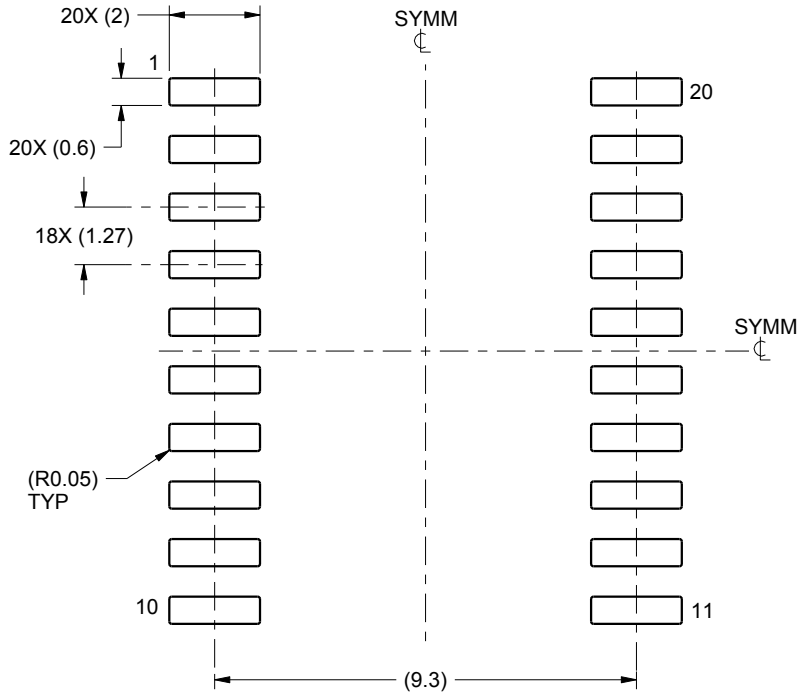

LAND PATTERN EXAMPLE
SCALE:6X

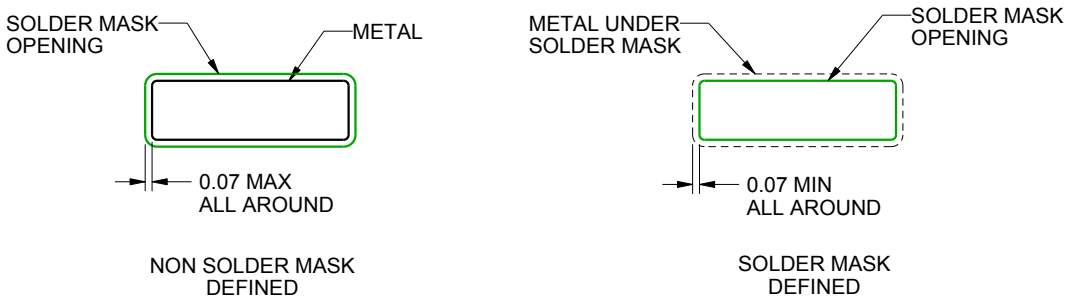

SOLDER MASK DETAILS

4220724/A 05/2016

NOTES: (continued)

6. Publication IPC-7351 may have alternate designs.
7. Solder mask tolerances between and around signal pads can vary based on board fabrication site.

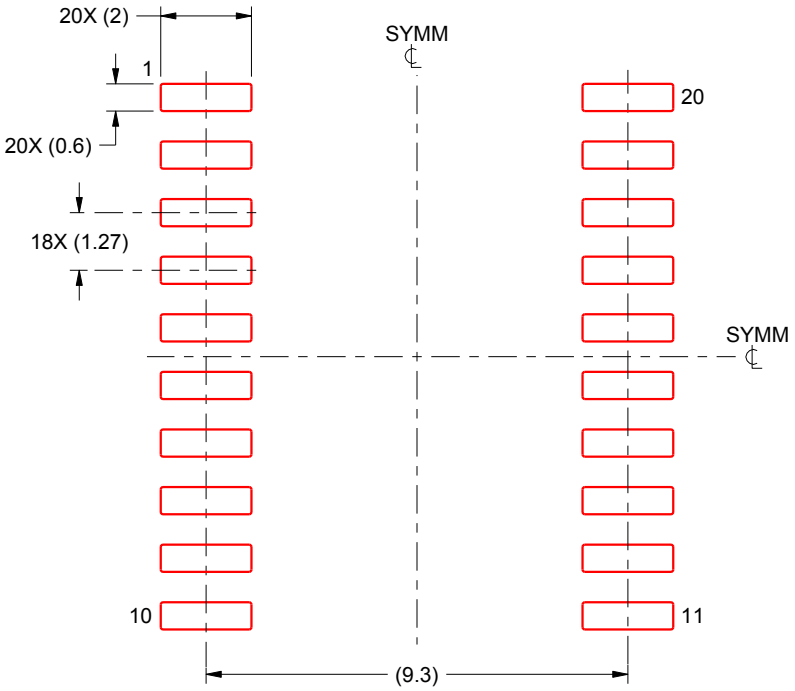

SOLDER PASTE EXAMPLE
BASED ON 0.125 mm THICK STENCIL
SCALE:6X

4220724/A 05/2016

NOTES: (continued)

8. Laser cutting apertures with trapezoidal walls and rounded corners may offer better paste release. IPC-7525 may have alternate design recommendations.
9. Board assembly site may have different recommendations for stencil design.

W (R–GDFP–F20) CERAMIC DUAL FLATPACK

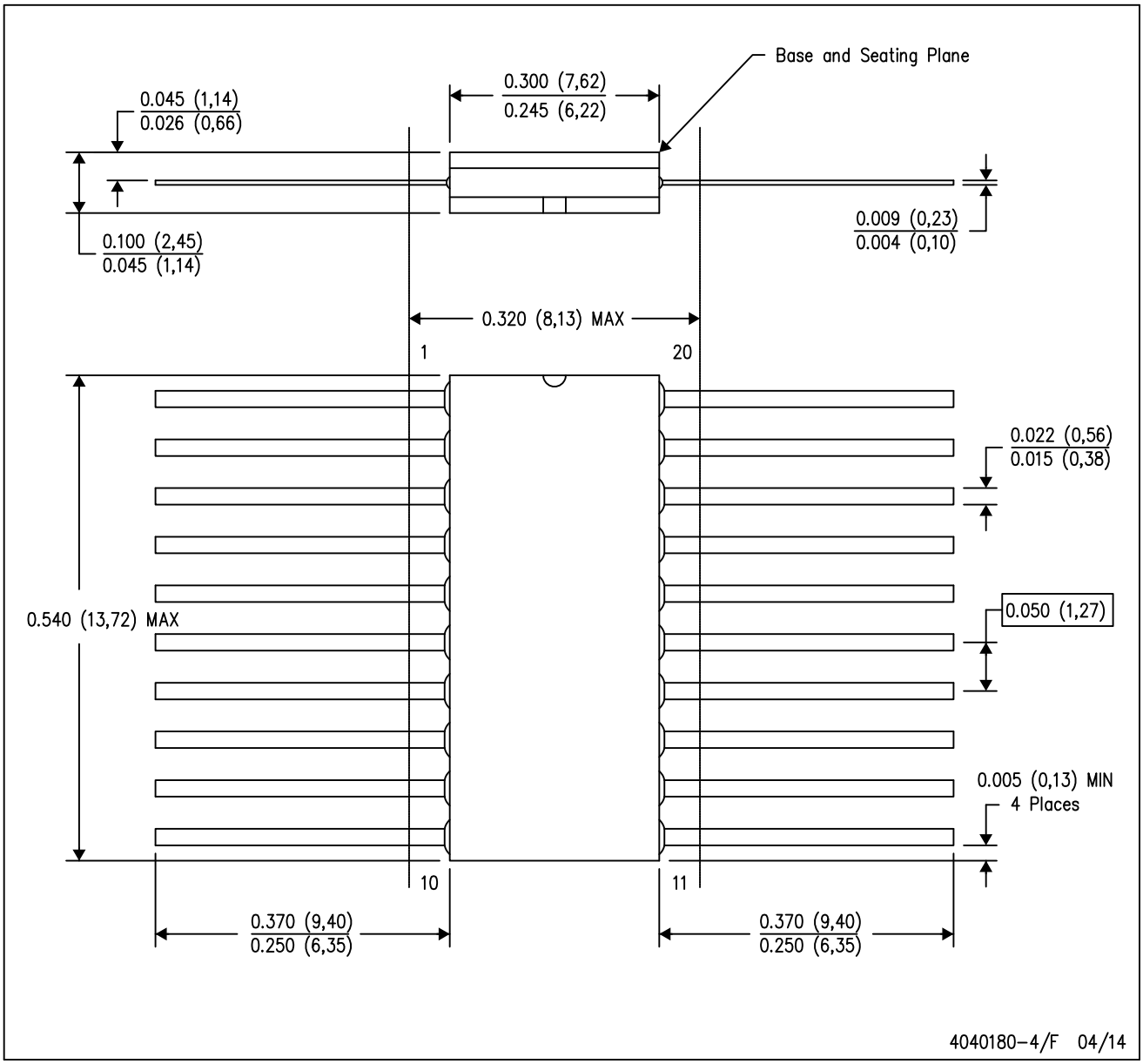

NOTES:
A. All linear dimensions are in inches (millimeters).
B. This drawing is subject to change without notice.
C. This package can be hermetically sealed with a ceramic lid using glass frit.
D. Index point is provided on cap for terminal identification only.
E. Falls within Mil–Std 1835 GDFP2–F20

IMPORTANT NOTICE AND DISCLAIMER

TI PROVIDES TECHNICAL AND RELIABILITY DATA (INCLUDING DATASHEETS), DESIGN RESOURCES (INCLUDING REFERENCE DESIGNS), APPLICATION OR OTHER DESIGN ADVICE, WEB TOOLS, SAFETY INFORMATION, AND OTHER RESOURCES “AS IS” AND WITH ALL FAULTS, AND DISCLAIMS ALL WARRANTIES, EXPRESS AND IMPLIED, INCLUDING WITHOUT LIMITATION ANY IMPLIED WARRANTIES OF MERCHANTABILITY, FITNESS FOR A PARTICULAR PURPOSE OR NON-INFRINGEMENT OF THIRD PARTY INTELLECTUAL PROPERTY RIGHTS.

These resources are intended for skilled developers designing with TI products. You are solely responsible for (1) selecting the appropriate TI products for your application, (2) designing, validating and testing your application, and (3) ensuring your application meets applicable standards, and any other safety, security, or other requirements. These resources are subject to change without notice. TI grants you permission to use these resources only for development of an application that uses the TI products described in the resource. Other reproduction and display of these resources is prohibited. No license is granted to any other TI intellectual property right or to any third party intellectual property right. TI disclaims responsibility for, and you will fully indemnify TI and its representatives against, any claims, damages, costs, losses, and liabilities arising out of your use of these resources.

TI’s products are provided subject to TI’s Terms of Sale (www.ti.com/legal/termsofsale.html) or other applicable terms available either on ti.com or provided in conjunction with such TI products. TI’s provision of these resources does not expand or otherwise alter TI’s applicable warranties or warranty disclaimers for TI products.

Mailing Address: Texas Instruments, Post Office Box 655303, Dallas, Texas 75265
Copyright © 2018, Texas Instruments Incorporated

Looking for pricing, stock, or lifecycle information?

Click below to explore more details on WIN SOURCE:

- View SN74LVTH374NSR on WIN SOURCE
- Texas Instruments Information

Optimize Your Supply Chain with WIN SOURCE Solutions

- Global Sourcing Solution
- Obsolete Management
- Cost Control Management
- Shortage Management
- Alternative Solution
- Excess Inventory Management