THE DATASHEET OF

MC10EL35DR2

www.win-source.net 0086-755-83957316

MC10EL35, MC100EL35

5 V ECL JK Flip-Flop

ON Semiconductor®

www.onsemi.com

SOIC−8 NB
D SUFFIX
CASE 751−05

TSSOP−8
DT SUFFIX
CASE 948R−02

Description

The MC10EL/100EL35 is a high speed JK flip-flop. The J/K data enters the master portion of the flip-flop when the clock is LOW and is transferred to the slave, and thus the outputs, upon a positive transition of the clock. The reset pin is asynchronous and is activated with a logic HIGH.

The 100 Series contains temperature compensation.

Features

- 525 ps Propagation Delay
- 2.2G Hz Toggle Frequency
- ESD Protection:
  - > 1 kV Human Body Model
  - > 100 V Machine Model
- PECL Mode Operating Range: V_{CC} = 4.2 V to 5.7 with V_{EE} = 0 V
- NECL Mode Operating Range: V_{CC} = 0 V with V_{EE} = −4.2 V to −5.7 V
- Internal Input Pulldown Resistors on J, K, CLK, and R
- Meets or Exceeds JEDEC Spec EIA/JESD78 IC Latchup Test
- Moisture Sensitivity:
  - Level 1 for SOIC−8 NB
  - Level 3 for TSSOP−8
  - For Additional Information, see Application Note AND8003/D
- Flammability Rating: UL−94 V−0 @ 0.125 in, Oxygen Index 28 to 34
- Transistor Count = 81 Devices
- These Devices are Pb-Free, Halogen Free and are RoHS Compliant

MARKING DIAGRAMS*

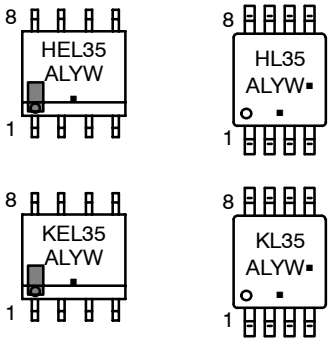

SOIC−8 **TSSOP−8**

H = MC10
K = MC100
A = Assembly Location
L = Wafer Lot
Y = Year
W = Work Week
▪ = Pb-Free Package

(Note: Microdot may be in either location)

*For additional marking information, refer to Application Note AND8002/D.

ORDERING INFORMATION

Device	Package	Shipping
MC10EL35DG	SOIC−8 NB (Pb-Free)	98 Units / Tube
MC10EL35DTG	TSSOP−8 (Pb-Free)	100 Unit / Tube
MC100EL35DG	SOIC−8 NB (Pb-Free)	98 Units / tube
MC100EL35DTG	TSSOP−8 (Pb-Free)	100 Units / Tube

© Semiconductor Components Industries, LLC, 2016

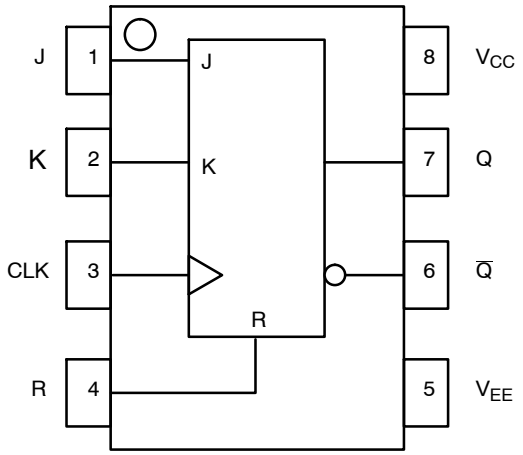

Figure 1. Logic Diagram and Pinout Assignment

Table 1. PIN DESCRIPTION

PIN	FUNCTION
J	ECL Input
K	ECL Input
R	ECL Reset
CLK	ECL Clock Input
Q, $\overline{Q}$	ECL Data Outputs
V_{CC}	Positive Supply
V_{EE}	Negative Supply

Table 1. TRUTH TABLE

J*	K*	R*	CLK	Qn+1
L	L	L	Z	Qn
L	H	L	Z	L
H	L	L	Z	H
H	H	L	L	$\overline{Qn}$
X	X	H	X	L

Table 2. MAXIMUM RATINGS

Symbol	Parameter	Condition 1	Condition 2	Rating	Unit
V_{CC}	PECL Mode Power Supply	V_{EE} = 0 V		8	V
V_{EE}	NECL Mode Power Supply	V_{CC} = 0 V		−8	V
V_I	PECL Mode Input Voltage NECL Mode Input Voltage	V_{EE} = 0 V V_{CC} = 0 V	$V_I \le V_{CC}$ $V_I \ge V_{EE}$	6 −6	V
I_{out}	Output Current	Continuous Surge		50 100	mA
T_A	Operating Temperature Range			−40 to +85	°C
T_{stg}	Storage Temperature Range			−65 to +150	°C
θ_{JA}	Thermal Resistance (Junction-to-Ambient)	0 lfpm 500 lfpm	SOIC−8 NB SOIC−8 NB	190 130	°C/W
θ_{JC}	Thermal Resistance (Junction-to-Case)	Standard Board	SOIC−8 NB	41 to 44	°C/W
θ_{JA}	Thermal Resistance (Junction-to-Ambient)	0 lfpm 500 lfpm	TSSOP−8 TSSOP−8	185 140	°C/W
θ_{JC}	Thermal Resistance (Junction-to-Case)	Standard Board	TSSOP−8	41 to 44 ±5%	°C/W
T_{sol}	Wave Solder (Pb-Free)	< 2 to 3 sec @ 260°C		265	°C

Stresses exceeding those listed in the Maximum Ratings table may damage the device. If any of these limits are exceeded, device functionality should not be assumed, damage may occur and reliability may be affected.

Table 3. 10EL SERIES PECL DC CHARACTERISTICS (V_{CC} = 5.0 V; V_{EE} = 0 V (Note 1))

Symbol	Characteristic	−40°C			25°C			85°C			Unit
		Min	Typ	Max	Min	Typ	Max	Min	Typ	Max	
I_{EE}	Power Supply Current		27	32		27	32		27	32	mA
V_{OH}	Output HIGH Voltage (Note 2)	3920	4010	4110	4020	4105	4190	4090	4185	4280	mV
V_{OL}	Output LOW Voltage (Note 2)	3050	3200	3350	3050	3210	3370	3050	3227	3405	mV
V_{IH}	Input HIGH Voltage	3770		4110	3870		4190	3940		4280	mV
V_{IL}	Input LOW Voltage	3050		3500	3050		3520	3050		3555	mV
I_{IH}	Input HIGH Current			150			150			150	μA
I_{IL}	Input LOW Current	0.5			0.5			0.3			μA

NOTE: Device will meet the specifications after thermal equilibrium has been established when mounted in a test socket or printed circuit board with maintained transverse airflow greater than 500 lfpm. Electrical parameters are guaranteed only over the declared operating temperature range. Functional operation of the device exceeding these conditions is not implied. Device specification limit values are applied individually under normal operating conditions and not valid simultaneously.

1. Input and output parameters vary 1:1 with V_{CC}. V_{EE} can vary +0.25 V / −0.5 V.
2. Outputs are terminated through a 50 Ω resistor to V_{CC} − 2.0 V.

Table 4. 10EL SERIES NECL DC CHARACTERISTICS (V_{CC} = 0 V; V_{EE} = −5.0 V (Note 1))

Symbol	Characteristic	−40°C			25°C			85°C			Unit
		Min	Typ	Max	Min	Typ	Max	Min	Typ	Max	
I_{EE}	Power Supply Current		27	32		27	32		27	32	mA
V_{OH}	Output HIGH Voltage (Note 2)	−1080	−990	−890	−980	−895	−810	−910	−815	−720	mV
V_{OL}	Output LOW Voltage (Note 2)	−1950	−1800	−1650	−1950	−1790	−1630	−1950	−1773	−1595	mV
V_{IH}	Input HIGH Voltage	−1230		−890	−1130		−810	−1060		−720	mV
V_{IL}	Input LOW Voltage	−1950		−1500	−1950		−1480	−1950		−1445	mV
I_{IH}	Input HIGH Current			150			150			150	μA
I_{IL}	Input LOW Current	0.5			0.5			0.3			μA

NOTE: Device will meet the specifications after thermal equilibrium has been established when mounted in a test socket or printed circuit board with maintained transverse airflow greater than 500 lfpm. Electrical parameters are guaranteed only over the declared operating temperature range. Functional operation of the device exceeding these conditions is not implied. Device specification limit values are applied individually under normal operating conditions and not valid simultaneously.

1. Input and output parameters vary 1:1 with V_{CC}. V_{EE} can vary +0.25 V / −0.5 V.
2. Outputs are terminated through a 50 Ω resistor to V_{CC} − 2.0 V.

Table 5. 100EL SERIES PECL DC CHARACTERISTICS (V_{CC} = 5.0 V; V_{EE} = 0 V (Note 1))

Symbol	Characteristic	−40°C			25°C			85°C			Unit
		Min	Typ	Max	Min	Typ	Max	Min	Typ	Max	
I_{EE}	Power Supply Current		27	32		27	32		32	37	mA
V_{OH}	Output HIGH Voltage (Note 2)	3915	3995	4120	3975	4045	4120	3975	4050	4120	mV
V_{OL}	Output LOW Voltage (Note 2)	3170	3305	3445	3190	3295	3380	3190	3295	3380	mV
V_{IH}	Input HIGH Voltage (Single-Ended)	3835		4120	3835		4120	3835		4120	mV
V_{IL}	Input LOW Voltage (Single-Ended)	3190		3525	3190		3525	3190		3525	mV
I_{IH}	Input HIGH Current			150			150			150	μA
I_{IL}	Input LOW Current	0.5			0.5			0.5			μA

NOTE: Device will meet the specifications after thermal equilibrium has been established when mounted in a test socket or printed circuit board with maintained transverse airflow greater than 500 lfpm. Electrical parameters are guaranteed only over the declared operating temperature range. Functional operation of the device exceeding these conditions is not implied. Device specification limit values are applied individually under normal operating conditions and not valid simultaneously.

1. Input and output parameters vary 1:1 with V_{CC}. V_{EE} can vary +0.8 V / −0.5 V.
2. Outputs are terminated through a 50 Ω resistor to V_{CC} − 2.0 V.

Table 6. 100EL SERIES NECL DC CHARACTERISTICS (V_{CC} = 0 V; V_{EE} = −5.0 V (Note 1))

Symbol	Characteristic	−40°C			25°C			85°C			Unit
		Min	Typ	Max	Min	Typ	Max	Min	Typ	Max	
I_{EE}	Power Supply Current		27	32		27	32		32	37	mA
V_{OH}	Output HIGH Voltage (Note 2)	−1085	−1005	−880	−1025	−955	−880	−1025	−955	−880	mV
V_{OL}	Output LOW Voltage (Note 2)	−1830	−1695	−1555	−1810	−1705	−1620	−1810	−1705	−1620	mV
V_{IH}	Input HIGH Voltage (Single-Ended)	−1165		−880	−1165		−880	−1165		−880	mV
V_{IL}	Input LOW Voltage (Single-Ended)	−1810		−1475	−1810		−1475	−1810		−1475	mV
I_{IH}	Input HIGH Current			150			150			150	μA
I_{IL}	Input LOW Current	0.5			0.5			0.5			μA

NOTE: Device will meet the specifications after thermal equilibrium has been established when mounted in a test socket or printed circuit board with maintained transverse airflow greater than 500 lfpm. Electrical parameters are guaranteed only over the declared operating temperature range. Functional operation of the device exceeding these conditions is not implied. Device specification limit values are applied individually under normal operating conditions and not valid simultaneously.

1. Input and output parameters vary 1:1 with V_{CC}. V_{EE} can vary +0.8 V / −0.5 V.
2. Outputs are terminated through a 50 Ω resistor to V_{CC} − 2.0 V.-

Table 7. AC CHARACTERISTICS (V_{CC} = 5.0 V; V_{EE} = 0 V or V_{CC} = 0 V; V_{EE} = −5.0 V (Note 1))

Symbol	Characteristic		−40°C			25°C			85°C			Unit
			Min	Typ	Max	Min	Typ	Max	Min	Typ	Max	
fmax	Maximum Toggle Frequency		1.4	2.0		1.8	2.2		1.8	2.2		GHz
t_{PLH} t_{PHL}	Propagation Delay to Output	CLK MR	290 225	515 450	740 675	350 275	525 450	700 625	395 350	570 525	745 700	ps
t_S	Setup Time	J, K	150	0		150	0		150	0		ps
t_H	Hold Time	J, K	250	100		250	100		250	100		ps
t_{RR}	Reset Recovery		400	200		400	200		400	200		ps
t_{PW}	Minimum Pulse Width CLK, Reset		400			400			400			ps
t_{JITTER}	Cycle-to-Cycle Jitter			1.0			1.0			1.0		ps
t_r t_f	Output Rise/Fall Times Q (20%−80%)		100	225	350	100	225	350	100	225	350	ps

NOTE: Device will meet the specifications after thermal equilibrium has been established when mounted in a test socket or printed circuit board with maintained transverse airflow greater than 500 lfpm. Electrical parameters are guaranteed only over the declared operating temperature range. Functional operation of the device exceeding these conditions is not implied. Device specification limit values are applied individually under normal operating conditions and not valid simultaneously.

1. 10 Series: V_{EE} can vary +0.25 V / −0.5 V.
   100 Series: V_{EE} can vary +0.8 V / −0.5 V.

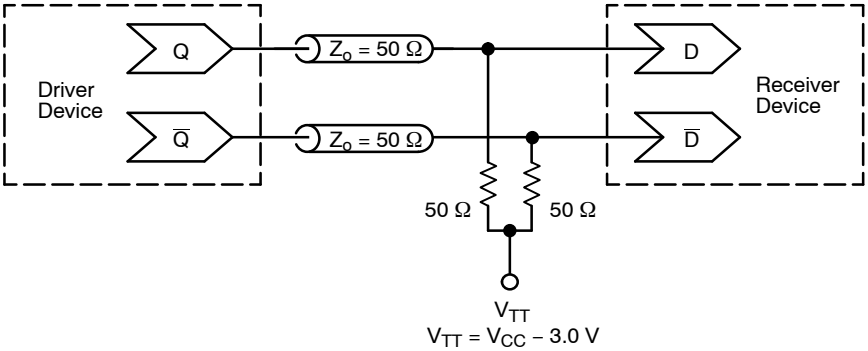

Figure 2. Typical Termination for Output Driver and Device Evaluation (See Application Note AND8020/D – Termination of ECL Logic Devices)

Resource Reference of Application Notes

AN1405/D	–	ECL Clock Distribution Techniques
AN1406/D	–	Designing with PECL (ECL at +5.0 V)
AN1503/D	–	ECLinPS™ I/O SPiCE Modeling Kit
AN1504/D	–	Metastability and the ECLinPS Family
AN1568/D	–	Interfacing Between LVDS and ECL
AN1672/D	–	The ECL Translator Guide
AND8001/D	–	Odd Number Counters Design
AND8002/D	–	Marking and Date Codes
AND8020/D	–	Termination of ECL Logic Devices
AND8066/D	–	Interfacing with ECLinPS
AND8090/D	–	AC Characteristics of ECL Devices

PACKAGE DIMENSIONS

SOIC−8 NB
D SUFFIX
CASE 751−07
ISSUE AK

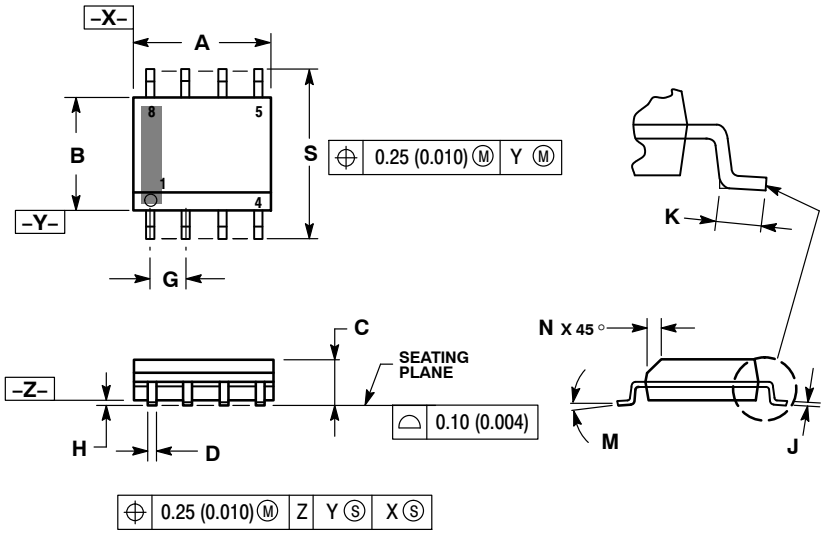

NOTES:
1. DIMENSIONING AND TOLERANCING PER ANSI Y14.5M, 1982.
2. CONTROLLING DIMENSION: MILLIMETER.
3. DIMENSION A AND B DO NOT INCLUDE MOLD PROTRUSION.
4. MAXIMUM MOLD PROTRUSION 0.15 (0.006) PER SIDE.
5. DIMENSION D DOES NOT INCLUDE DAMBAR PROTRUSION. ALLOWABLE DAMBAR PROTRUSION SHALL BE 0.127 (0.005) TOTAL IN EXCESS OF THE D DIMENSION AT MAXIMUM MATERIAL CONDITION.
6. 751−01 THRU 751−06 ARE OBSOLETE. NEW STANDARD IS 751−07.

	MILLIMETERS		INCHES	
DIM	MIN	MAX	MIN	MAX
A	4.80	5.00	0.189	0.197
B	3.80	4.00	0.150	0.157
C	1.35	1.75	0.053	0.069
D	0.33	0.51	0.013	0.020
G	1.27 BSC		0.050 BSC	
H	0.10	0.25	0.004	0.010
J	0.19	0.25	0.007	0.010
K	0.40	1.27	0.016	0.050
M	0 °	8 °	0 °	8 °
N	0.25	0.50	0.010	0.020
S	5.80	6.20	0.228	0.244

SOLDERING FOOTPRINT*

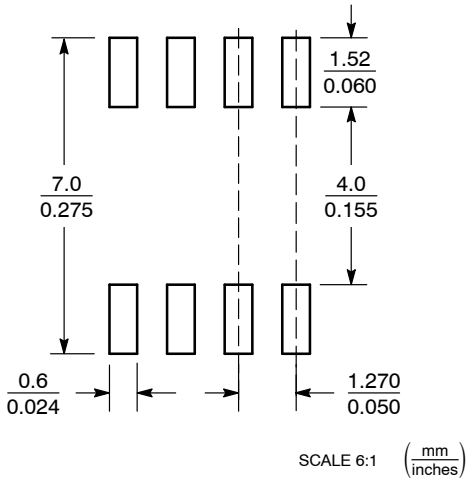

*For additional information on our Pb-Free strategy and soldering details, please download the ON Semiconductor Soldering and Mounting Techniques Reference Manual, SOLDERRM/D.

PACKAGE DIMENSIONS

TSSOP−8
DT SUFFIX
CASE 948R−02
ISSUE A

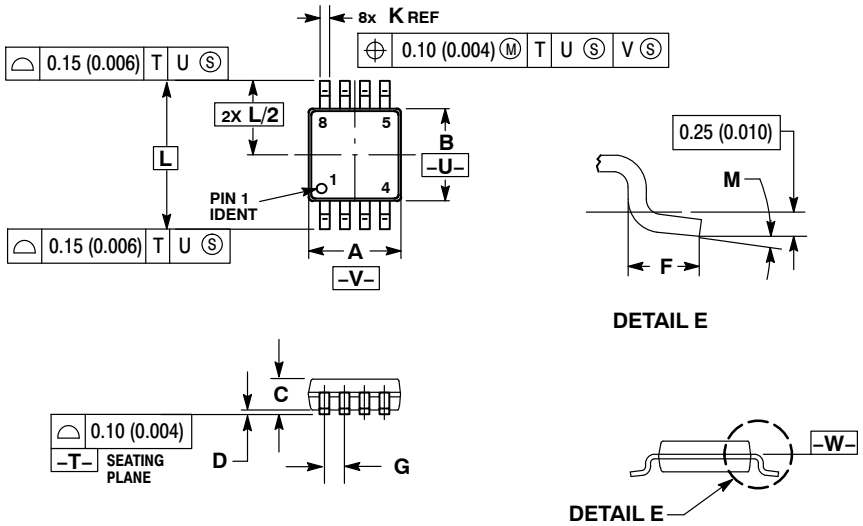

NOTES:
1. DIMENSIONING AND TOLERANCING PER ANSI Y14.5M, 1982.
2. CONTROLLING DIMENSION: MILLIMETER.
3. DIMENSION A DOES NOT INCLUDE MOLD FLASH. PROTRUSIONS OR GATE BURRS. MOLD FLASH OR GATE BURRS SHALL NOT EXCEED 0.15 (0.006) PER SIDE.
4. DIMENSION B DOES NOT INCLUDE INTERLEAD FLASH OR PROTRUSION. INTERLEAD FLASH OR PROTRUSION SHALL NOT EXCEED 0.25 (0.010) PER SIDE.
5. TERMINAL NUMBERS ARE SHOWN FOR REFERENCE ONLY.
6. DIMENSION A AND B ARE TO BE DETERMINED AT DATUM PLANE −W−.

	MILLIMETERS		INCHES	
DIM	MIN	MAX	MIN	MAX
A	2.90	3.10	0.114	0.122
B	2.90	3.10	0.114	0.122
C	0.80	1.10	0.031	0.043
D	0.05	0.15	0.002	0.006
F	0.40	0.70	0.016	0.028
G	0.65 BSC		0.026 BSC	
K	0.25	0.40	0.010	0.016
L	4.90 BSC		0.193 BSC	
M	0°	6°	0°	6°

ECLinPS is a trademark of Semiconductor Components Industries, LLC (SCILLC) or its subsidiaries in the United States and/or other countries.

ON Semiconductor and ON are trademarks of Semiconductor Components Industries, LLC dba ON Semiconductor or its subsidiaries in the United States and/or other countries. ON Semiconductor owns the rights to a number of patents, trademarks, copyrights, trade secrets, and other intellectual property. A listing of ON Semiconductor's product/patent coverage may be accessed at www.onsemi.com/site/pdf/Patent−Marking.pdf. ON Semiconductor reserves the right to make changes without further notice to any products herein. ON Semiconductor makes no warranty, representation or guarantee regarding the suitability of its products for any particular purpose, nor does ON Semiconductor assume any liability arising out of the application or use of any product or circuit, and specifically disclaims any and all liability, including without limitation special, consequential or incidental damages. Buyer is responsible for its products and applications using ON Semiconductor products, including compliance with all laws, regulations and safety requirements or standards, regardless of any support or applications information provided by ON Semiconductor. "Typical" parameters which may be provided in ON Semiconductor data sheets and/or specifications can and do vary in different applications and actual performance may vary over time. All operating parameters, including "Typicals" must be validated for each customer application by customer's technical experts. ON Semiconductor does not convey any license under its patent rights nor the rights of others. ON Semiconductor products are not designed, intended, or authorized for use as a critical component in life support systems or any FDA Class 3 medical devices or medical devices with a same or similar classification in a foreign jurisdiction or any devices intended for implantation in the human body. Should Buyer purchase or use ON Semiconductor products for any such unintended or unauthorized application, Buyer shall indemnify and hold ON Semiconductor and its officers, employees, subsidiaries, affiliates, and distributors harmless against all claims, costs, damages, and expenses, and reasonable attorney fees arising out of, directly or indirectly, any claim of personal injury or death associated with such unintended or unauthorized use, even if such claim alleges that ON Semiconductor was negligent regarding the design or manufacture of the part. ON Semiconductor is an Equal Opportunity/Affirmative Action Employer. This literature is subject to all applicable copyright laws and is not for resale in any manner.

PUBLICATION ORDERING INFORMATION

LITERATURE FULFILLMENT:
Literature Distribution Center for ON Semiconductor
19521 E. 32nd Pkwy, Aurora, Colorado 80011 USA
Phone: 303−675−2175 or 800−344−3860 Toll Free USA/Canada
Fax: 303−675−2176 or 800−344−3867 Toll Free USA/Canada
Email: orderlit@onsemi.com

N. American Technical Support: 800−282−9855 Toll Free USA/Canada
Europe, Middle East and Africa Technical Support:
Phone: 421 33 790 2910
Japan Customer Focus Center
Phone: 81−3−5817−1050

ON Semiconductor Website: **www.onsemi.com**

Order Literature: http://www.onsemi.com/orderlit

For additional information, please contact your local Sales Representative

Looking for pricing, stock, or lifecycle information?

Click below to explore more details on WIN SOURCE:

- View MC10EL35DR2 on WIN SOURCE
- ON Semiconductor Information

Optimize Your Supply Chain with WIN SOURCE Solutions

- Global Sourcing Solution
- Obsolete Management
- Cost Control Management
- Shortage Management
- Alternative Solution
- Excess Inventory Management