THE DATASHEET OF

SN65HVD1787DR

www.win-source.net 0086-755-83957316

SN65HVD17xx Fault-Protected RS-485 Transceivers With Extended Common-Mode Range

1 Features

- Bus-Pin Fault Protection to:
  - > ±70 V ('HVD1785, 86, 91, 92)
  - > ±30 V ('HVD1787, 93)
- Common-Mode Voltage Range (–20 V to 25 V) More Than Doubles TIA/EIA 485 Requirement
- Bus I/O Protection
  - ±16 kV JEDEC HBM Protection
- Reduced Unit Load for Up to 256 Nodes
- Failsafe Receiver for Open-Circuit, Short-Circuit and Idle-Bus Conditions
- Low Power Consumption
  - Low Standby Supply Current, 1 µA Typical
  - I_{CC} 5 mA Quiescent During Operation
- Power-Up, Power-Down Glitch-Free Operation

2 Applications

- Designed for RS-485 and RS-422 Networks

3 Description

These devices are designed to survive overvoltage faults such as direct shorts to power supplies, mis-wiring faults, connector failures, cable crushes, and tool mis-applications. They are also robust to ESD events, with high levels of protection to human-body model specifications.

These devices combine a differential driver and a differential receiver, which operate from a single power supply. In the 'HVD1785, 'HVD1786, and 'HVD1787, the driver differential outputs and the receiver differential inputs are connected internally to form a bus port suitable for half-duplex (two-wire bus) communication. In the 'HVD1793, the driver differential outputs and the receiver differential inputs are separate pins, to form a bus port suitable for full-duplex (four-wire bus) communication. These ports feature a wide common-mode voltage range, making the devices suitable for multipoint applications over long cable runs. These devices are characterized from –40°C to 105°C.

For similar features with 3.3-V supply operation, see the SN65HVD1781 (SLLS877).

Device Information(1)

PART NUMBER	PACKAGE	BODY SIZE (NOM)
SN65HVD1785, SN65HVD1786, SN65HVD1787	SOIC (8)	4.90 mm × 3.91 mm
	PDIP (8)	9.81 mm × 6.35 mm
SN65HVD1791, SN65HVD1792, SN65HVD1793	SOIC (14)	8.65 mm × 3.91 mm

(1) For all available packages, see the orderable addendum at the end of the datasheet.

Example of Bus Short to Power Supply

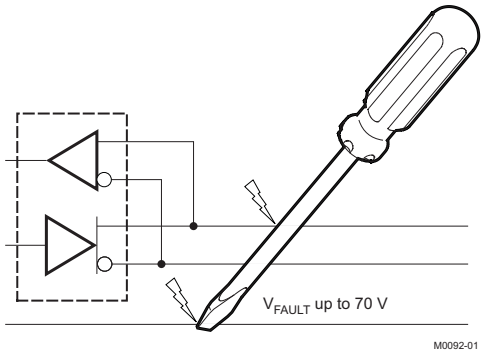

An IMPORTANT NOTICE at the end of this data sheet addresses availability, warranty, changes, use in safety-critical applications, intellectual property matters and other important disclaimers. PRODUCTION DATA.

Table of Contents

1 Features ... 1
2 Applications ... 1
3 Description ... 1
4 Revision History ... 2
5 Product Selection Guide ... 4
6 Pin Configuration and Functions ... 4
7 Specifications ... 5
7.1 Absolute Maximum Ratings ... 5
7.2 ESD Ratings ... 6
7.3 Recommended Operating Conditions ... 6
7.4 Thermal Information ... 6
7.5 Electrical Characteristics ... 7
7.6 Thermal Considerations ... 8
7.7 Switching Characteristics ... 8
7.8 Typical Characteristics ... 10
8 Parameter Measurement Information ... 11
9 Detailed Description ... 15
9.1 Overview ... 15
9.2 Functional Block Diagram ... 15
9.3 Feature Description ... 15
9.4 Device Functional Modes ... 18
10 Application and Implementation ... 19
10.1 Application Information ... 19
10.2 Typical Application ... 19
11 Power Supply Recommendations ... 21
12 Layout ... 22
12.1 Layout Guidelines ... 22
12.2 Layout Example ... 22
13 Device and Documentation Support ... 23
13.1 Documentation Support ... 23
13.2 Related Links ... 23
13.3 Community Resources ... 24
13.4 Trademarks ... 24
13.5 Electrostatic Discharge Caution ... 24
13.6 Glossary ... 24
14 Mechanical, Packaging, and Orderable Information ... 24

4 Revision History

NOTE: Page numbers for previous revisions may differ from page numbers in the current version.

Changes from Revision H (February 2010) to Revision I	Page
• Added *Pin Configuration and Functions* section, *ESD Ratings* table, *Feature Description* section, *Device Functional Modes*, *Application and Implementation* section, *Power Supply Recommendations* section, *Layout* section, *Device and Documentation Support* section, and *Mechanical, Packaging, and Orderable Information* section	1

Changes from Revision G (April 2009) to Revision H	Page
• Deleted 70-V from the data sheet title	1
• Changed first Features Bullet From: Bus-Pin Fault Protection to > ±70 V To: Bus-Pin Fault Protection to: > ±70 V ('HVD1785, 86,91,92), > ±30 V ('HVD1787, 93)	1
• Changed Voltage range at A and B inputs in the ABS MAX RATINGS table, adding seperate conditions for the different devices	5
• Changed From: Voltage input range, transient pulse, A and B, through 100 Ω To: Transient overvoltage pulse through 100 Ω per TIA-485	5
• Added the 70-V Fault-Protection section	16

Changes from Revision F (November 2008) to Revision G	Page
• Added I_{OH} = –400 µA conditions and values to the Receiver high-level output voltage	7
• Added Receiver enabled $V_{CM} > V_{CC}$	8
• Added Receiver Failsafe information	15
• Changed the *Receiver Failsafe* section	16

Copyright © 2008–2015, Texas Instruments Incorporated

Changes from Revision E (July 2008) to Revision F — **Page**

- Added to Title: With Extended Common-Mode Range 1
- Added Receiver enabled $V_{CM} > V_{CC}$ condition and values to the Driver enabled time 8
- Added Figure 4 10

Changes from Revision D (June 2008) to Revision E — **Page**

- Changed - Removed Product Preview label 4
- Changed SN65HVD1792 Removed Product Preview label 4
- Changed SN65HVD1793 Removed Product Preview label 4

Changes from Revision C (March 2008) to Revision D — **Page**

- Added Features Bullet: Power-Up, Power-Down Glitch-Free Operation 1
- Changed (Preview) to part number SN65HVD1791 in the Product Selection Guide 4
- Added section - APPLICATION INFORMATION 15
- Changed Receiver disabled by default - Enable from X to OPEN. Output from OPEN to Z 18

Changes from Revision B (March 2008) to Revision C — **Page**

- Changed Rec Op Table. Signaling rate, HVD1787, HVD1793 From: 20 Mbps max to 10 Mbps max. 6

Changes from Revision A (March 2008) to Revision B — **Page**

- Added $T_A \leq 85°C$ and $T_A \leq 105°C$ conditions and values to the Receiver low-level output voltage. 7
- Changed the max value for Supply Current (quiescent) Driver and receiver disabled, From 1 µA To 5 µA. 7

Changes from Original (January 2008) to Revision A — **Page**

- Changed Features Bullet From: Low Standby Supply Current, 2 µA Max To: Low Standby Supply Current, 1 µA Typ 1
- Deleted columns to the PRODUCT SELECTION GUIDE for Package Options and Status. 4
- Added text: For similar features with 3.3 V supply operation... 4
- Changed the Product Selection Guide Signaling Rate for SN65HVD1787 From 20 Mbps To: 10 Mbps 4
- Changed the Product Selection Guide Signaling Rate for SN65HVD1793 From 20 Mbps To: 10 Mbps 4
- Deleted The Competitive Comparison table. 5
- Added $|V_{OD}|$ RS-485 with common-mode load $T_A \leq 85°C$ and $T_A \leq 105°C$ 7
- Changed ΔV_{OC} From min = -0.2 mV and max 0.2 mV To: min = -100 mV and max 100 mV 7
- Changed HVD1785/1791 Driver differential output rise/fall time max value From 2.5 µs To: 2.6 µs. 8
- Changed HVD1787/1793 Driver differential output rise/fall time max value From 1.5 ns To: 30 ns. 8
- Changed Receiver propagation delay max value From 50 ns To: 70 ns. 9
- Changed t_{PLZ}, t_{PHZ} Receiver disable time From 3000 ns To 100 ns. 9
- Deleted graph DIFFERENTIAL OUTPUT VOLTAGE vs DIFFERENTIAL LOAD CURRENT. 10

Copyright © 2008–2015, Texas Instruments Incorporated

5 Product Selection Guide

PART NUMBER	DUPLEX	SIGNALING RATE	NODES	CABLE LENGTH
SN65HVD1785	Half	115 kbps	Up to 256	1500 m
SN65HVD1786	Half	1 Mbps	Up to 256	150 m
SN65HVD1787	Half	10 Mbps	Up to 64	50 m
SN65HVD1791	Full	115 kbps	Up to 256	1500 m
SN65HVD1792	Full	1 Mbps	Up to 256	150 m
SN65HVD1793	Full	10 Mbps	Up to 64	50 m

6 Pin Configuration and Functions

D or P Package
8-Pin SOIC or PDIP
SN65HVD1785, 1786, 1787 Top View

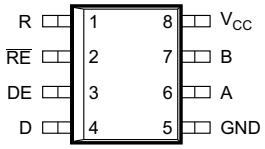

Pin Functions (SN65HVD1785, SN65HVD1786, SN65HVD1787)

PIN		TYPE	DESCRIPTION
NAME	NO.		
A	6	Bus input/output	Driver output or receiver input (complementary to B)
B	7	Bus input/output	Driver output or receiver input (complementary to A)
D	4	Digital input	Driver data input
DE	3	Digital input	Driver enable, active high
GND	5	Reference potential	Local device ground
R	1	Digital output	Receive data output
$\overline{RE}$	2	Digital input	Receiver enable, active low
V_{CC}	8	Supply	4.5-V-to-5.5-V supply

Copyright © 2008–2015, Texas Instruments Incorporated

D Package
14-Pin SOIC
SN65VD1791, 1792, 1793 Top View

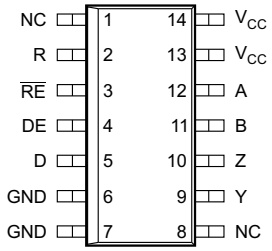

NC - No internal connection
Pins 6 and 7 are connected together internally.
Pins 13 and 14 are connected together internally.

Pin Functions (SN65HVD1791, SN65HVD1792, SN65HVD1793)

PIN		TYPE	DESCRIPTION
NAME	NO.		
A	12	Bus input	Receiver input (complementary to B)
B	11	Bus input	Receiver input (complementary to A)
Y	9	Bus output	Driver output (complementary to Z)
Z	10	Bus output	Driver output (complementary to Y)
D	5	Digital input	Driver data input
DE	4	Digital input	Driver enable, active high
GND	6, 7	Reference potential	Local device ground
R	2	Digital output	Receive data output
$\overline{RE}$	3	Digital input	Receiver enable, active low
V_{CC}	13, 14	Supply	4.5-V to 5.5-V supply
NC	1, 8	No connect	No connect; should be left floating

7 Specifications

7.1 Absolute Maximum Ratings(1)

				MIN	MAX	UNIT
V_{CC}	Supply voltage			–0.5	7	V
	Voltage at bus pins	'HVD1785, 86, 91, 92, 93	A, B pins	–70	70	V
		'HVD1787	A, B pins	–70	30	V
		'HVD1793	Y, Z pins	–70	30	V
	Input voltage at any logic pin			–0.3	V_{CC} + 0.3	V
	Transient overvoltage pulse through 100 Ω per TIA-485			–100	100	V
	Receiver output current			–24	24	mA
T_J	Junction temperature				170	°C
T_{stg}	Storage temperature				160	°C

(1) Stresses beyond those listed under *Absolute Maximum Ratings* may cause permanent damage to the device. These are stress ratings only and functional operation of the device at these or any other conditions beyond those indicated under *Recommended Operating Conditions* is not implied. Exposure to absolute-maximum-rated conditions for extended periods may affect device reliability.

Copyright © 2008–2015, Texas Instruments Incorporated

7.2 ESD Ratings

				VALUE	UNIT
$V_{(ESD)}$	Electrostatic discharge	Human body model (HBM), per ANSI/ESDA/JEDEC JS-001[(1)], JEDEC Standard 22, Test Method A114	Bus terminals and GND	±16000	V
			All pins	±4000	
		Charged-device model (CDM), per JEDEC specification JESD22-C101[(2)], JEDEC Standard 22, Test Method C101		±2000	
		Machine Model, JEDEC Standard 22, Test Method A115		±400	
		IEC 60749-26 ESD (human-body model)	Bus terminals and GND	±16000	

(1) JEDEC document JEP155 states that 500-V HBM allows safe manufacturing with a standard ESD control process.
(2) JEDEC document JEP157 states that 250-V CDM allows safe manufacturing with a standard ESD control process.

7.3 Recommended Operating Conditions

			MIN	NOM	MAX	UNIT
V_{CC}	Supply voltage		4.5	5	5.5	V
V_I	Input voltage at any bus terminal (separately or common mode)[(1)]		–20		25	V
V_{IH}	High-level input voltage (driver, driver enable, and receiver enable inputs)		2		V_{CC}	V
V_{IL}	Low-level input voltage (driver, driver enable, and receiver enable inputs)		0		0.8	V
V_{ID}	Differential input voltage		–25		25	V
I_O	Output current, driver		–60		60	mA
	Output current, receiver		–8		8	mA
R_L	Differential load resistance		54	60		Ω
C_L	Differential load capacitance			50		pF
$1/t_{UI}$	Signaling rate	HVD1785, HVD1791			115	kbps
		HVD1786, HVD1792			1	Mbps
		HVD1787, HVD1793			10	
T_A	Operating free-air temperature (see application section for thermal information)		–40		105	°C
T_J	Junction temperature		–40		150	°C

(1) By convention, the least positive (most negative) limit is designated as minimum in this data sheet.

7.4 Thermal Information

THERMAL METRIC[(1)]		SN65HVD1785, SN65HVD1786, SN65HVD1787		SN65HVD1791, SN65HVD1792, SN65HVD1793	UNIT
		D (SOIC)	P (PDIP)	D (SOIC)	
		8 PINS	8 PINS	14 PINS	
$R_{\theta JA}$	Junction-to-ambient thermal resistance	138	59	95	°C/W
$R_{\theta JA\ (low\text{-}K)}$	Junction-to-case (top) thermal resistance	242	128	168	°C/W
$R_{\theta JC(top)}$	Junction-to-board thermal resistance	61	61	44	°C/W
$R_{\theta JB}$	Junction-to-top characterization parameter	62	39	40	°C/W
ψ_{JT}	Junction-to-board characterization parameter	3.4	17.6	8.2	°C/W
ψ_{JB}	Junction-to-case (bottom) thermal resistance	33.4	28.3	25	°C/W

(1) For more information about traditional and new thermal metrics, see the *Semiconductor and IC Package Thermal Metrics* application report, SPRA953.

Copyright © 2008–2015, Texas Instruments Incorporated

7.5 Electrical Characteristics

over recommended operating conditions (unless otherwise noted)

PARAMETER		TEST CONDITIONS			MIN	TYP	MAX	UNIT
$\lvert V_{OD} \rvert$	Driver differential output voltage magnitude	RS-485 with common-mode load, V_{CC} > 4.75 V, see Figure 5	$T_A \le 85°C$		1.5			V
			$T_A \le 105°C$		1.4			
		R_L = 54 Ω, 4.75 V ≤ V_{CC} ≤ 5.25 V			1.5	2		
		R_L = 100 Ω, 4.75 V ≤ V_{CC} ≤ 5.25 V			2	2.5		
$\Delta\lvert V_{OD} \rvert$	Change in magnitude of driver differential output voltage	R_L = 54 Ω			–0.2	0	0.2	V
$V_{OC(SS)}$	Steady-state common-mode output voltage				1	$V_{CC}/2$	3	V
ΔV_{OC}	Change in differential driver output common-mode voltage				–100	0	100	mV
$V_{OC(PP)}$	Peak-to-peak driver common-mode output voltage	Center of two 27-Ω load resistors, see Figure 6				500		mV
C_{OD}	Differential output capacitance					23		pF
V_{IT+}	Positive-going receiver differential input voltage threshold	V_{CM} = –20 V to 25 V				–100	–10	mV
V_{IT-}	Negative-going receiver differential input voltage threshold				–200	–150		mV
V_{HYS}	Receiver differential input voltage threshold hysteresis ($V_{IT+} – V_{IT-}$)				30	50		mV
V_{OH}	Receiver high-level output voltage	I_{OH} = –8 mA			2.4	V_{CC} – 0.3		V
		I_{OH} = –400 µA			4			
V_{OL}	Receiver low-level output voltage	I_{OL} = 8 mA	$T_A \le 85°C$			0.2	0.4	V
			$T_A \le 105°C$			0.2	0.5	
I_I	Driver input, driver enable, and receiver enable input current				–100		100	µA
I_{OZ}	Receiver output high-impedance current	V_O = 0 V or V_{CC}, $\overline{RE}$ at V_{CC}			–1		1	µA
I_{OS}	Driver short-circuit output current				–250		250	mA
I_I	Bus input current (disabled driver)	V_{CC} = 4.5 to 5.5 V or V_{CC} = 0 V, DE at 0 V	85, 86, 91, 92	V_I = 12 V		75	125	µA
				V_I = –7 V	–100	–40		
			87, 93	V_I = 12 V			500	
				V_I = –7 V	–400			
I_{CC}	Supply current (quiescent)	Driver and receiver enabled	DE = V_{CC}, RE = GND, no load			4	6	mA
		Driver enabled, receiver disabled	DE = V_{CC}, RE = V_{CC}, no load			3	5	
		Driver disabled, receiver enabled	DE = GND, RE = GND, no load			2	4	
		Driver and receiver disabled	DE = GND, D = open RE = V_{CC}, no load			0.5	5	µA
	Supply current (dynamic)	See *Typical Characteristics*						

7.6 Thermal Considerations

PARAMETER			TEST CONDITIONS	VALUE	UNIT
P_D	Power dissipation	85, 91	V_{CC} = 5.5 V, T_J = 150°C, R_L = 300 Ω, C_L = 50 pF (driver), C_L = 15 pF (receiver) 5-V supply, unterminated (1)	290	mW
		85, 91	V_{CC} = 5.5 V, T_J = 150°C, R_L = 100 Ω, C_L = 50 pF (driver), C_L = 15 pF (receiver) 5-V supply, RS-422 load (1)	320	
		86			
		87			
		85, 91	V_{CC} = 5.5 V, T_J = 150°C, R_L = 54 Ω, C_L = 50 pF (driver), C_L = 15 pF (receiver) 5-V supply, RS-485 load (1)	400	
		86			
		87			
T_{SD}	Thermal-shutdown junction temperature			170	°C

(1) Driver and receiver enabled, 50% duty cycle square-wave signal at signaling rate: HVD1785, 1791 at 115 kbps, HVD1786 at 1 Mbps, HVD1787 at 10 Mbps)

7.7 Switching Characteristics

over recommended operating conditions (unless otherwise noted)

PARAMETER		TEST CONDITIONS		MIN	TYP	MAX	UNIT
DRIVER (HVD1785 AND HVD1791)							
t_r, t_f	Driver differential output rise/fall time	R_L = 54 Ω, C_L = 50 pF, see Figure 7		0.4	1.7	2.6	μs
t_{PHL}, t_{PLH}	Driver propagation delay				0.8	2	μs
$t_{SK(P)}$	Driver differential output pulse skew, $\lvert t_{PHL} - t_{PLH} \rvert$				20	250	ns
t_{PHZ}, t_{PLZ}	Driver disable time		See Figure 8 and Figure 9		0.1	5	μs
t_{PZH}, t_{PZL}	Driver enable time	Receiver enabled			0.2	3	μs
		Receiver disabled			3	12	
DRIVER (HVD1786 AND HVD1792)							
t_r, t_f	Driver differential output rise/fall time	R_L = 54 Ω, C_L = 50 pF, see Figure 7		50		300	ns
t_{PHL}, t_{PLH}	Driver propagation delay					200	ns
$t_{SK(P)}$	Driver differential output pulse skew, $\lvert t_{PHL} - t_{PLH} \rvert$					25	ns
t_{PHZ}, t_{PLZ}	Driver disable time		See Figure 8 and Figure 9			3	μs
t_{PZH}, t_{PZL}	Driver enable time	Receiver enabled				300	ns
		Receiver disabled				10	μs
		Receiver enabled	$V_{CM} > V_{CC}$		500		ns
DRIVER (HVD1787 AND HVD1793)							
t_r, t_f	Driver differential output rise/fall time	R_L = 54 Ω, C_L = 50 pF, see Figure 7		3		30	ns
t_{PHL}, t_{PLH}	Driver propagation delay					50	ns
$t_{SK(P)}$	Driver differential output pulse skew, $\lvert t_{PHL} - t_{PLH} \rvert$					10	ns
t_{PHZ}, t_{PLZ}	Driver disable time		See Figure 8 and Figure 9			3	μs
t_{PZH}, t_{PZL}	Driver enable time	Receiver enabled				300	ns
		Receiver disabled				9	μs
		Receiver enabled	$V_{CM} > V_{CC}$		500		ns

Copyright © 2008–2015, Texas Instruments Incorporated

Switching Characteristics (continued)

over recommended operating conditions (unless otherwise noted)

PARAMETER		TEST CONDITIONS		MIN	TYP	MAX	UNIT
RECEIVER (ALL DEVICES UNLESS OTHERWISE NOTED)							
t_r, t_f	Receiver output rise/fall time	C_L = 15 pF, see Figure 10			4	15	ns
t_{PHL}, t_{PLH}	Receiver propagation delay time		85, 86, 91, 92		100	200	ns
			87, 93			70	
$t_{SK(P)}$	Receiver output pulse skew, $\lvert t_{PHL} - t_{PLH} \rvert$		85, 86, 91, 92		6	20	ns
			87, 93			5	
t_{PLZ}, t_{PHZ}	Receiver disable time	Driver enabled, see Figure 11			15	100	ns
$t_{PZL(1)}$, $t_{PZH(1)}$ $t_{PZL(2)}$), $t_{PZH(2)}$	Receiver enable time	Driver enabled, see Figure 11			80	300	ns
		Driver disabled, see Figure 12			3	9	µs

7.8 Typical Characteristics

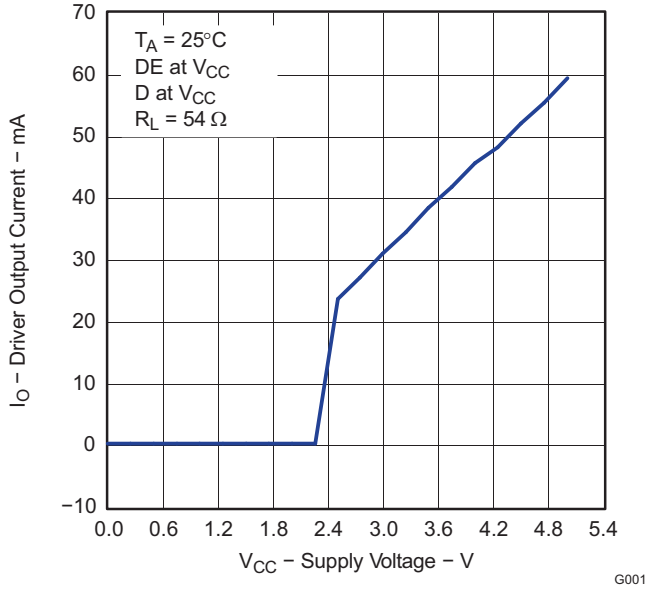

Figure 1. Driver Output Current vs Supply Voltage

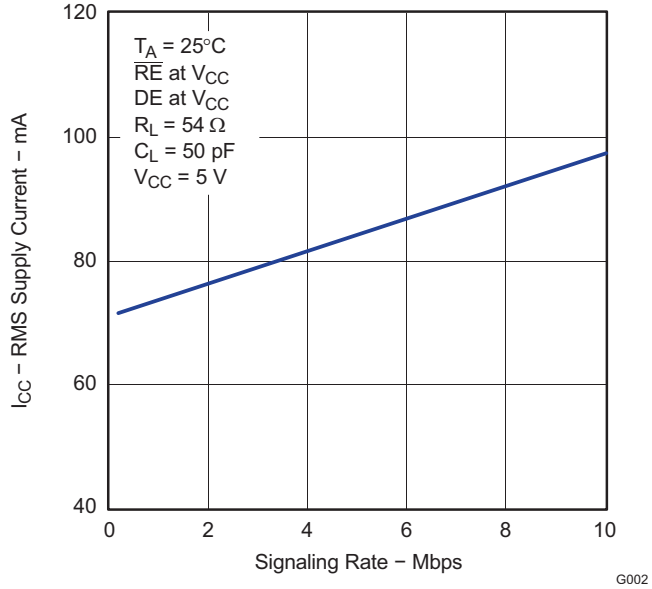

Figure 2. HVD1787 RMS Supply Current vs Signaling Rate

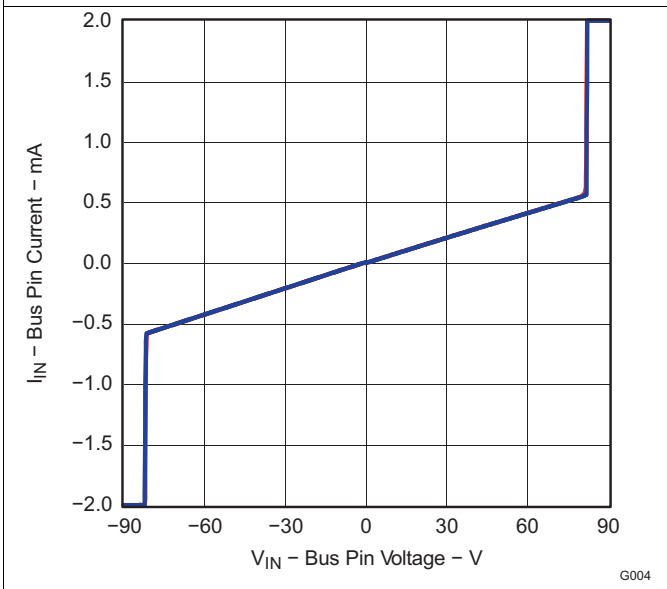

Figure 3. Bus Pin Current vs Bus Pin Voltage

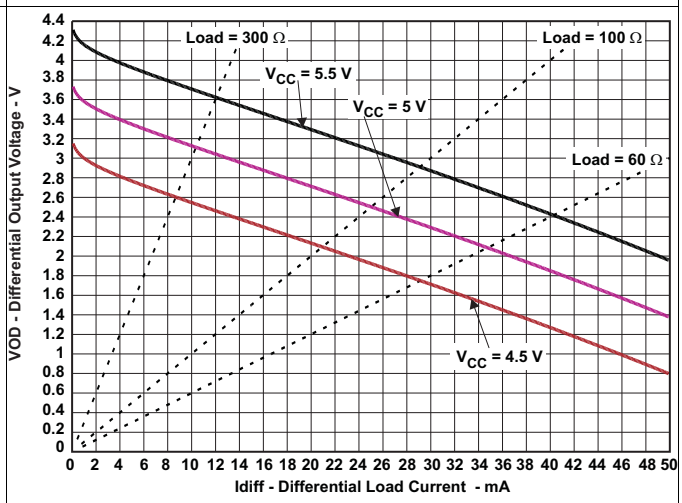

Figure 4. Differential Output Voltage vs. Differential Load Current

Copyright © 2008–2015, Texas Instruments Incorporated

8 Parameter Measurement Information

Input generator rate is 100 kbps, 50% duty cycle, rise and fall times less than 6 nsec, output impedance 50 Ω.

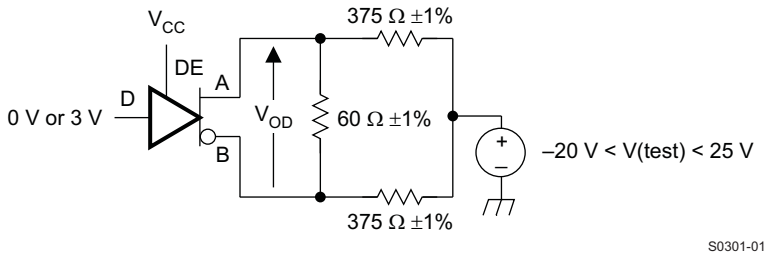

Figure 5. Measurement of Driver Differential Output Voltage With Common-Mode Load

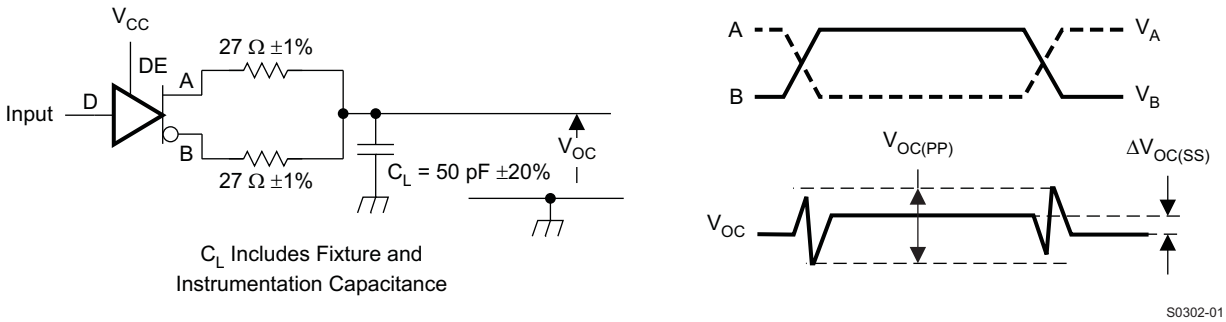

Figure 6. Measurement of Driver Differential and Common-Mode Output With RS-485 Load

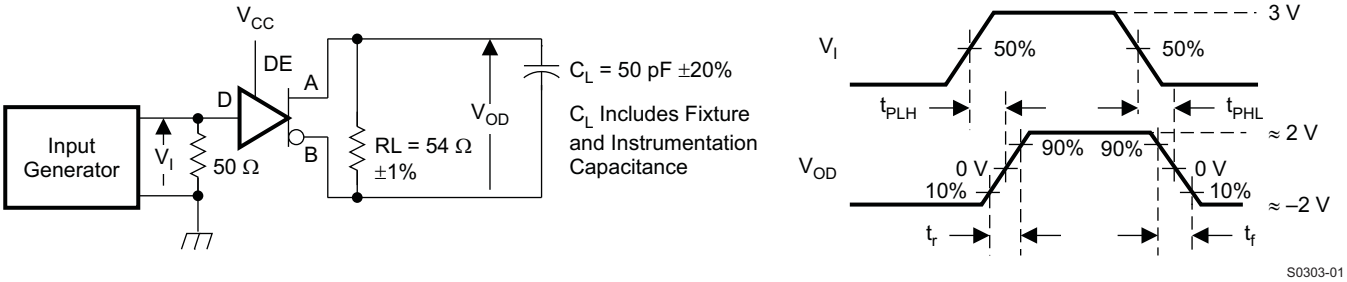

Figure 7. Measurement of Driver Differential Output Rise and Fall Times and Propagation Delays

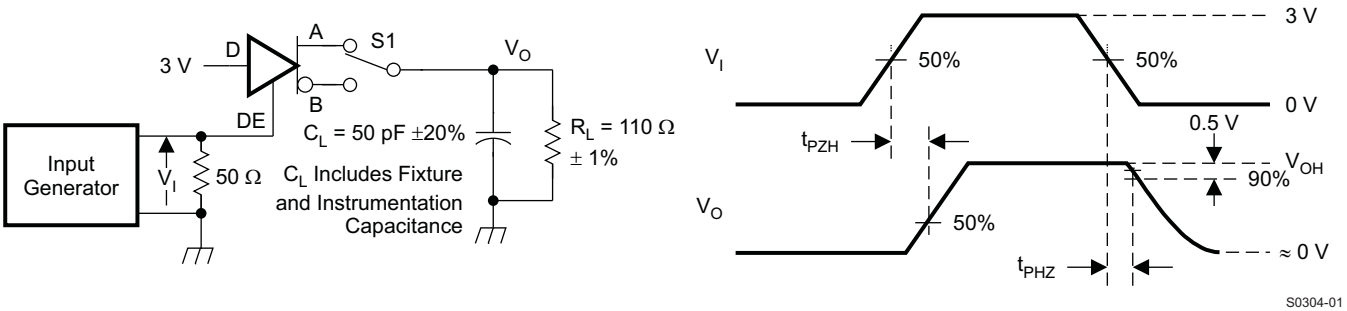

NOTE: D at 3 V to test non-inverting output, D at 0 V to test inverting output.

Figure 8. Measurement of Driver Enable and Disable Times With Active High Output and Pulldown Load

Parameter Measurement Information (continued)

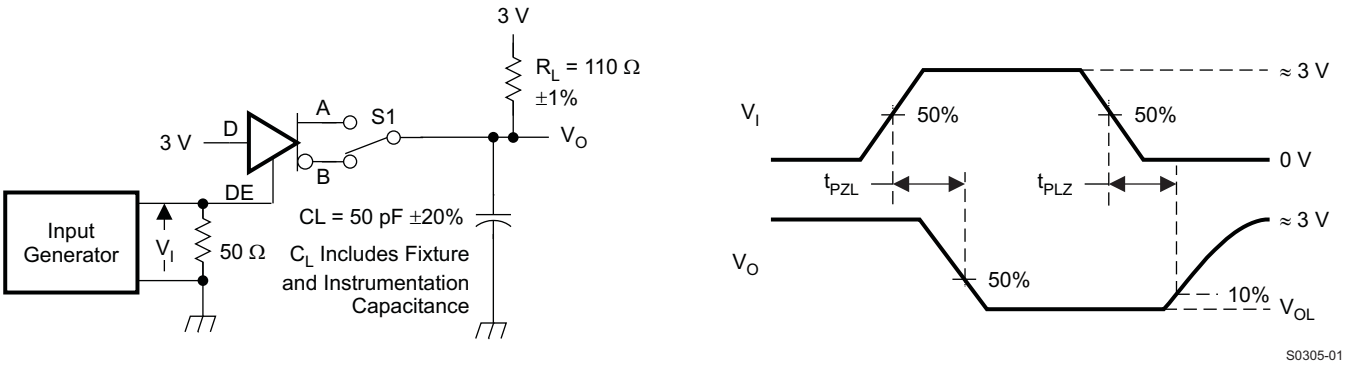

NOTE: D at 0 V to test non-inverting output, D at 3 V to test inverting output.

Figure 9. Measurement of Driver Enable and Disable Times With Active-Low Output and Pullup Load

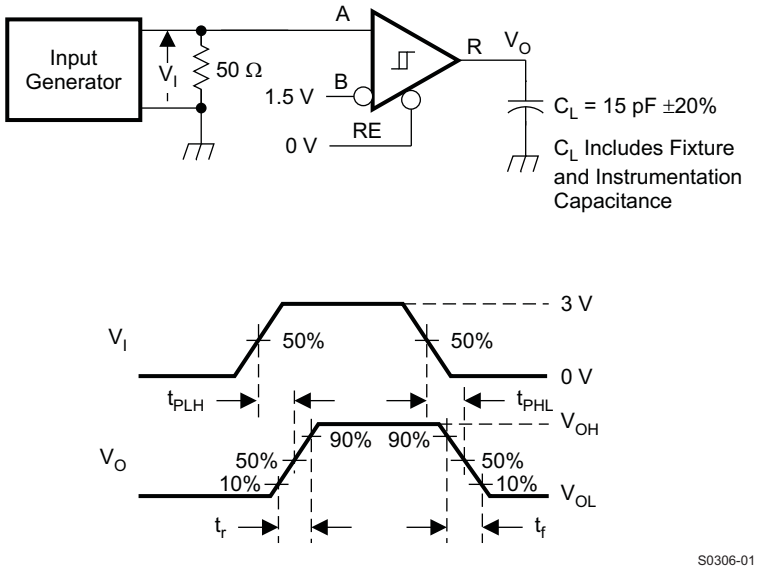

Figure 10. Measurement of Receiver Output Rise and Fall Times and Propagation Delays

Copyright © 2008–2015, Texas Instruments Incorporated

Parameter Measurement Information (continued)

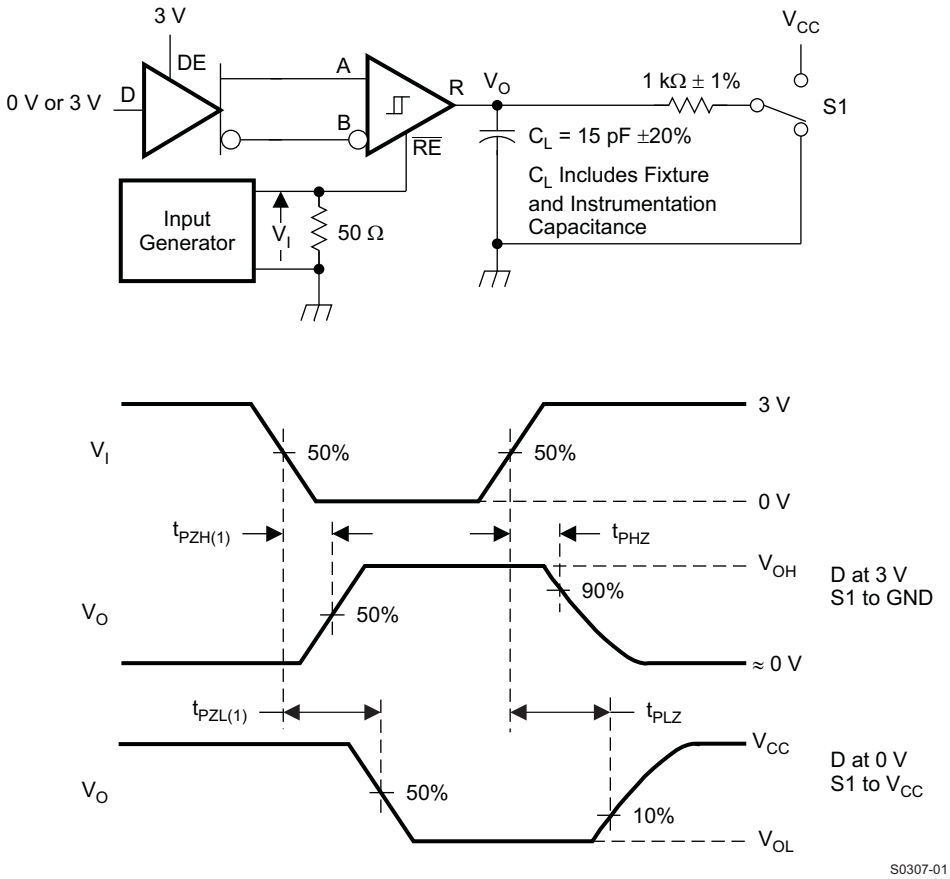

Figure 11. Measurement of Receiver Enable/Disable Times With Driver Enabled

Parameter Measurement Information (continued)

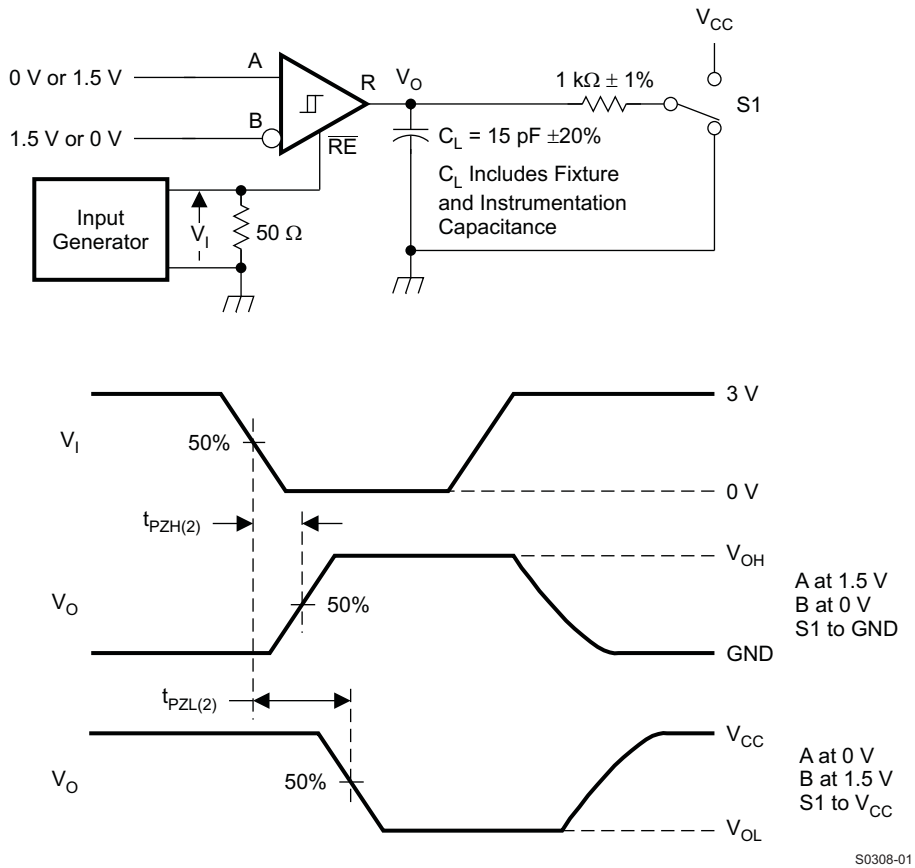

Figure 12. Measurement of Receiver Enable Times With Driver Disabled

Copyright © 2008–2015, Texas Instruments Incorporated

9 Detailed Description

9.1 Overview

The SN65HVD17xx family of RS-485 transceivers are designed to operate up to 115 kbps (HVD1785 and HVD1791), 1 Mbps (HVD1786 and HVD1792), or 10 Mbps (HVD1787 or HVD1793) and to withstand DC overvoltage faults on the bus interface pins. This helps to protect the devices against damages resulting from direct shorts to power supplies, cable mis-wirings, connector failures, or other common faults.

The SN65HVD178x devices are half-duplex, and thus have the transmitter and receiver bus interfaces connected together internally. The SN65HVD179x family leaves these two interfaces separate, allowing for full-duplex communication. The low receiver loading allows for up to 256 nodes to share a common RS-485 bus. The devices feature a wide common-mode range as well as fail-safe receivers, which ensure a stable logic-level output during bus open, short, or idle conditions.

9.2 Functional Block Diagram

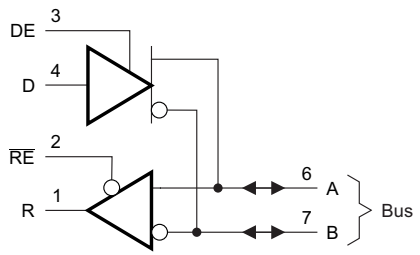

Figure 13. Half-Duplex Transceiver

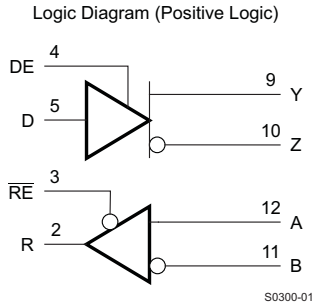

Figure 14. Full Duplex Transceiver

9.3 Feature Description

9.3.1 Hot-Plugging

These devices are designed to operate in hot swap or hot pluggable applications. Key features for hot-pluggable applications are power-up, power-down glitch free operation, default disabled input/output pins, and receiver failsafe. As shown in Figure 1, an internal Power-On Reset circuit keeps the driver outputs in a high-impedance state until the supply voltage has reached a level at which the device will reliably operate. This ensures that no spurious transitions (glitches) will occur on the bus pin outputs as the power supply turns on or turns off.

As shown in *Device Functional Modes*, the *ENABLE* inputs have the feature of default disable on both the driver enable and receiver enable. This ensures that the device will neither drive the bus nor report data on the R pin until the associated controller actively drives the enable pins.

Feature Description (continued)

9.3.2 Receiver Failsafe

The differential receiver is *failsafe* to invalid bus states caused by:

- open bus conditions such as a disconnected connector,
- shorted bus conditions such as cable damage shorting the twisted-pair together,
- or idle bus conditions that occur when no driver on the bus is actively driving.

In any of these cases, the differential receiver outputs a failsafe logic High state, so that the output of the receiver is not indeterminate.

In the HVD17xx family of RS-485 devices, receiver failsafe is accomplished by offsetting the receiver thresholds so that the "input indeterminate" range does not include zero volts differential. In order to comply with the RS-422 and RS-485 standards, the receiver output must output a High when the differential input V_{ID} is more positive than 200 mV, and must output a Low when the V_{ID} is more negative than -200 mV. The HVD17xx receiver parameters which determine the failsafe performance are V_{IT+} and V_{IT-} and V_{HYS}. In the *Electrical Characteristics* table, V_{IT-} has a typical value of –150 mV and a minimum (most negative) value of -200 mV, so differential signals more negative than -200 mV will always cause a Low receiver output. Similarly, differential signals more positive than 200 mV will always cause a High receiver output, because the typical value of V_{IT+} is -100mV, and V_{IT+} is never more positive than -10 mV under any conditions of temperature, supply voltage, or common-mode offset.

When the differential input signal is close to zero, it will still be above the V_{IT+} threshold, and the receiver output will be High. Only when the differential input is more negative than V_{IT-} will the receiver output transition to a Low state. So, the noise immunity of the receiver inputs during a bus fault condition includes the receiver hysteresis value V_{HYS} (the separation between V_{IT+} and V_{IT-}) as well as the value of V_{IT+}.

For the HVD17xx devices, the typical noise immunity is typically about 150 mV, which is the negative noise level needed to exceed the V_{IT-} threshold (V_{IT-} TYP = –150 mV). In the worst case, the failsafe noise immunity is never less than 40 mV, which is set by the maximum positive threshold (V_{IT+} MAX = –10 mV) plus the minimum hysteresis voltage (V_{HYS} MIN = 30 mV).

9.3.3 70-V Fault-Protection

The SN65HVD17xx family of RS-485 devices is designed to survive bus pin faults up to ±70V. The devices designed for fast signaling rate (10 Mbps) will not survive a bus pin fault with a direct short to voltages above 30V when:

1. the device is powered on AND

2a. the driver is enabled (DE=HIGH) AND D=HIGH AND the bus fault is applied to the A pin OR

2b. the driver is enabled (DE=HIGH) AND D=LOW AND the bus fault is applied to the B pin

Under other conditions, the device will survive shorts to bus pin faults up to 70V. Table 1 summarizes the conditions under which the device may be damaged, and the conditions under which the device will not be damaged.

Copyright © 2008–2015, Texas Instruments Incorporated

Feature Description (continued)

Table 1. Device Conditions

POWER	DE	D	A	B	RESULTS
OFF	X	X	-70V < V_A < 70V	-70V < V_B < 70V	Device survives
ON	LO	X	-70V < V_A < 70V	-70V < V_B < 70V	Device survives
ON	HI	L	-70V < V_A < 70V	-70V < V_B < 30V	Device survives
ON	HI	L	-70V < V_A < 70V	30V < V_B	Damage may occur
ON	HI	H	-70V < V_A < 30V	-70V < V_B < 30V	Device survives
ON	HI	H	30V < V_A	-70V < V_B < 30V	Damage may occur

9.3.4 Additional Options

The SN65HVD17xx family also has options for J1708 applications, for always-enabled full-duplex versions (industry-standard SN65LBC179 footprint) and for inverting-polarity versions, which allow users to correct a reversal of the bus wires without re-wiring. Contact your local Texas Instruments representative for information on these options.

Table 2. SN65HVD17xx Options for J1708 Applications

PART NUMBER	SN65HVD17xx		
FOOTPRINT/FUNCTION	SLOW	MEDIUM	FAST
Half-duplex (176 pinout)	85	86	87
Full-duplex no enables (179 pinout)	88	89	90
Full-duplex with enables (180 pinout)	91	92	93
Half-duplex with cable invert	94	95	96
Full-duplex with cable invert and enables	97	98	99
J1708	08	09	10

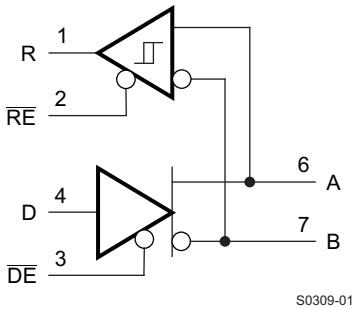

Figure 15. SN65HVD1708E Transceiver for J1708 Applications

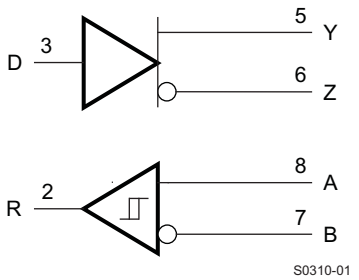

Figure 16. SN65HVD17xx Always-Enabled Driver Receiver

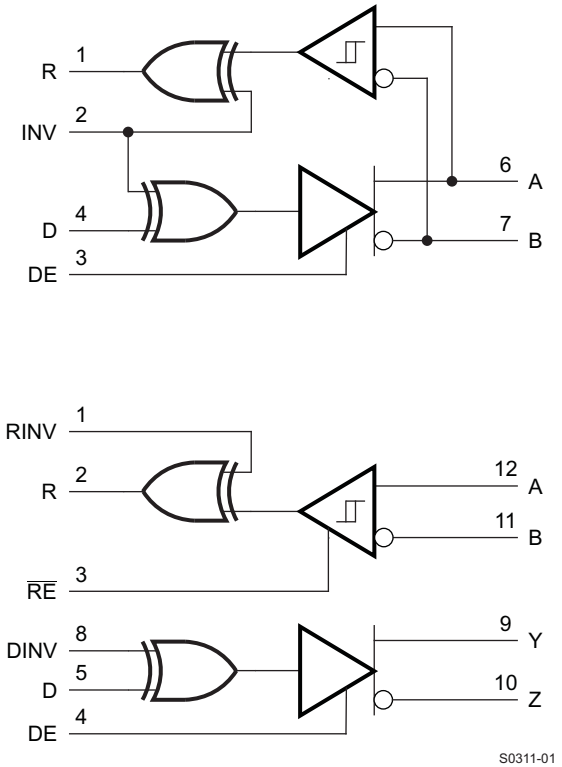

Figure 17. SN65HVD17xx Options With Inverting Feature to Correct for Miswired Cables

9.4 Device Functional Modes

Table 3. Driver Function Table

INPUT	ENABLE	OUTPUTS		
D	DE	A	B	
H	H	H	L	Actively drive bus high
L	H	L	H	Actively drive bus low
X	L	Z	Z	Driver disabled
X	OPEN	Z	Z	Driver disabled by default
OPEN	H	H	L	Actively drive bus high by default

Table 4. Receiver Function Table

DIFFERENTIAL INPUT	ENABLE	OUTPUT	
$V_{ID} = V_A - V_B$	RE	R	
$V_{IT+} < V_{ID}$	L	H	Receive valid bus high
$V_{IT-} < V_{ID} < V_{IT+}$	L	?	Indeterminate bus state
$V_{ID} < V_{IT-}$	L	L	Receive valid bus low
X	H	Z	Receiver disabled
X	OPEN	Z	Receiver disabled by default
Open-circuit bus	L	H	Fail-safe high output
Short-circuit bus	L	H	Fail-safe high output
Idle (terminated) bus	L	H	Fail-safe high output

Copyright © 2008–2015, Texas Instruments Incorporated

10 Application and Implementation

NOTE

Information in the following applications sections is not part of the TI component specification, and TI does not warrant its accuracy or completeness. TI's customers are responsible for determining suitability of components for their purposes. Customers should validate and test their design implementation to confirm system functionality.

10.1 Application Information

The SN65HVD17xx family consists of both half-duplex and full-duplex transceivers that can be used for asynchronous data communication. Half-duplex implementations require one signaling pair (two wires), while full-duplex implementations require two signaling pairs (four wires). The driver and receiver enable pins of the SN65HVD17xx family allow for control over the direction of data flow. Since it is common for multiple transceivers to share a common communications bus, care should be taken at the system level to ensure that only one driver is enabled at a time. This avoids bus contention, a fault condition in which multiple drivers attempt to send data at the same time.

10.2 Typical Application

An RS-485 bus consists of multiple transceivers connecting in parallel to a bus cable. To eliminate line reflections, each cable end is terminated with a termination resistor, R_T, whose value matches the characteristic impedance, Z_0, of the cable. This method, known as parallel termination, allows for higher data rates over longer cable length.

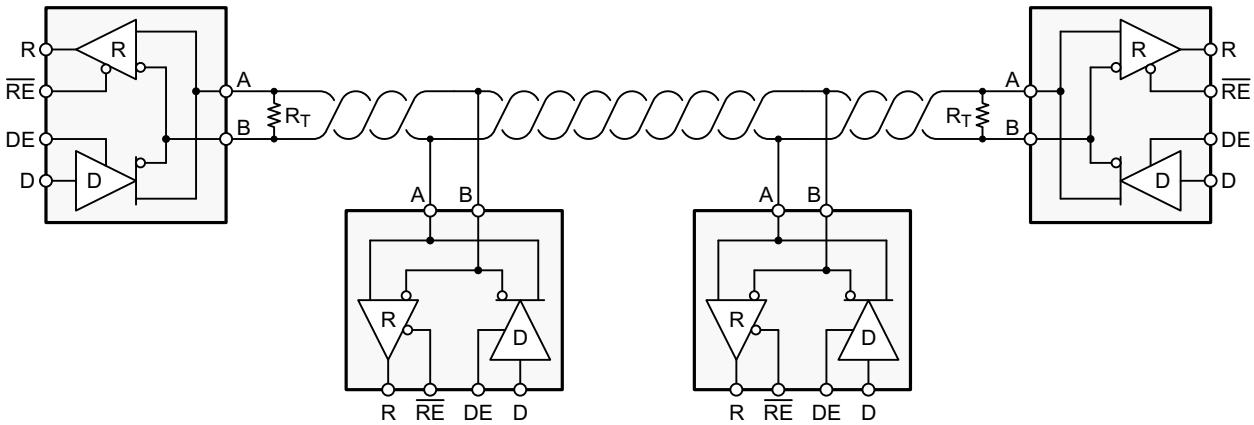

Figure 18. Typical RS-485 Network With Half-duplex Transceivers

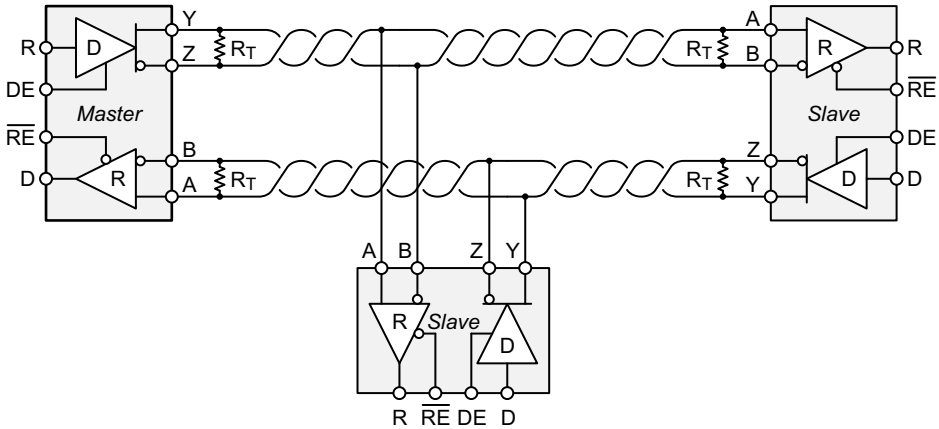

Figure 19. Typical RS-485 Network With Full-duplex Transceivers

Typical Application (continued)

10.2.1 Design Requirements

RS-485 is a robust electrical standard suitable for long-distance networking that may be used in a wide range of applications with varying requirements, such as distance, data rate, and number of nodes.

10.2.1.1 Data Rate and Bus Length

There is an inverse relationship between data rate and cable length, which means the higher the data rate, the short the cable length; and conversely, the lower the data rate, the longer the cable length. While most RS-485 systems use data rates between 10 kbps and 100 kbps, some applications require data rates up to 250 kbps at distances of 4000 feet and longer. Longer distances are possible by allowing for small signal jitter of up to 5 or 10%.

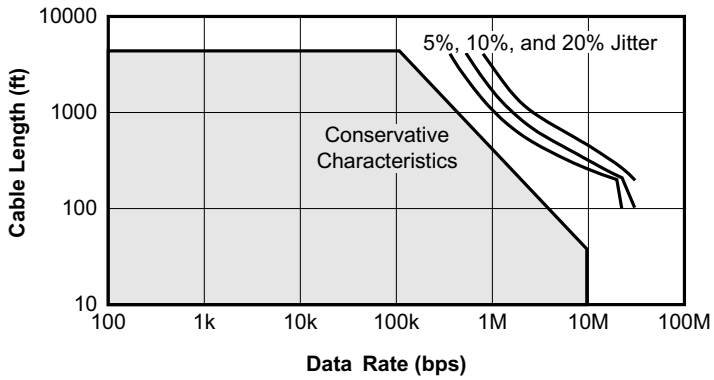

Figure 20. Cable Length vs Data Rate Characteristic

Even higher data rates are achievable (for example, 10 Mbps for the SN65HVD1787 and SN65HVD1793) in cases where the interconnect is short enough (or has suitably low attenuation at signal frequencies) to not degrade the data.

10.2.1.2 Stub Length

When connecting a node to the bus, the distance between the transceiver inputs and the cable trunk, known as the stub, should be as short as possible. Stubs present a non-terminated piece of bus line which can introduce reflections as the length of the stub increases. As a general guideline, the electrical length, or round-trip delay, of a stub should be less than one-tenth of the rise time of the driver, thus giving a maximum physical stub length as shown in Equation 1.

$$L_{stub} \leq 0.1 \times t_r \times v \times c \quad (1)$$

where

- t_r is the 10/90 rise time of the driver
- c is the speed of light (3×10^8 m/s)
- v is the signal velocity of the cable or trace as a factor of *c*

10.2.1.3 Receiver Failsafe

The differential receiver of the SN75HVD17xx family is *failsafe* to invalid bus states caused by:

- Open bus conditions, such as a disconnected connector
- Shorted bus conditions, such as cable damage shorting the twisted-pair together
- Idle bus conditions that occur when no driver on the bus is actively driving

n any of these cases, the differential receiver will output a failsafe logic high state so that the output of the receiver is not indeterminate.

Copyright © 2008–2015, Texas Instruments Incorporated

Typical Application (continued)

Receiver failsafe is accomplished by offsetting the receiver thresholds such that the “input indeterminate” range does not include zero volts differential. In order to comply with the RS-422 and RS-485 standards, the receiver output must output a high when the differential input V_{ID} is more positive than +200 mV, and must output a low when VID is more negative than -200 mV. The receiver parameters which determine the failsafe performance are $V_{IT(+)}$ and $V_{IT(-)}$. As shown in the Electrical Characteristics table, differential signals more negative than -200 mV will always cause a low receiver output, and differential signals more positive than +200 mV will always cause a high receiver output.

When the differential input signal is close to zero, it is still above the maximum $V_{IT(+)}$ threshold of -10 mV, and the receiver output will be high.

10.2.2 Detailed Design Procedure

Although the SN65HVD17xx family is internally protected against human-body-model ESD strikes up to 16 kV, additional protection against higher-energy transients can be provided at the application level by implementing external protection devices.

10.2.3 Application Curve

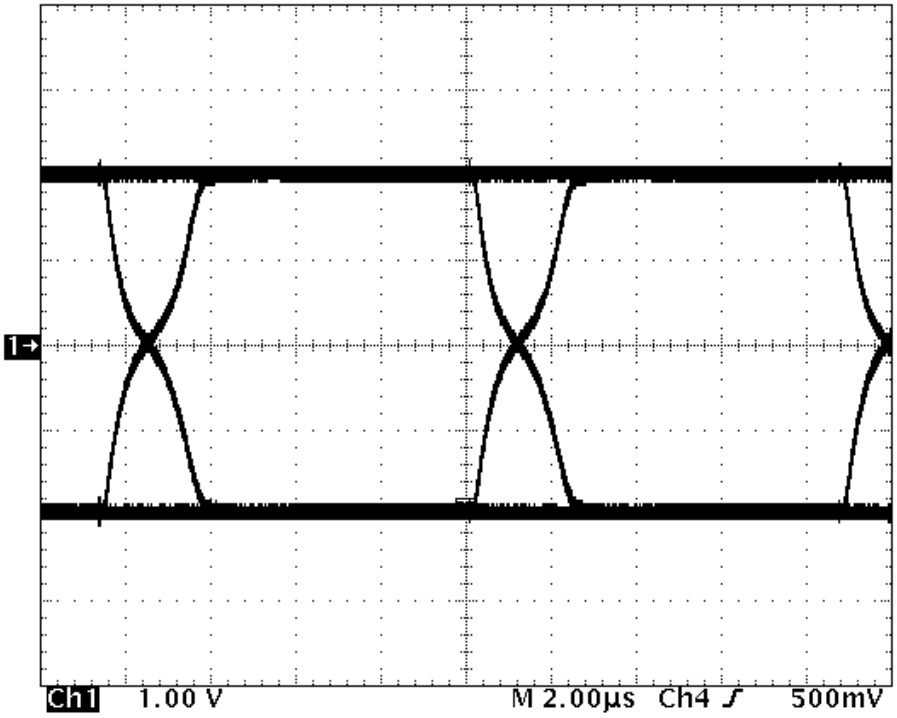

Figure 21. SN65HVD1785 Differential Output at 115 kbps

11 Power Supply Recommendations

To ensure reliable operation at all data rates and supply voltages, each supply should be decoupled with a 100-nF ceramic capacitor located as close to the supply pins as possible. This helps to reduce supply voltage ripple present on the outputs of switched-mode power supplies and also helps to compensate for the resistance and inductance of the PCB power planes.

12 Layout

12.1 Layout Guidelines

To ensure reliable operation at all data rates and supply voltages, each supply should be decoupled with a 100-nF ceramic capacitor located as close to the supply pins as possible. This helps to reduce supply voltage ripple present on the outputs of switched-mode power supplies and also helps to compensate for the resistance and inductance of the PCB power planes.

1. Place the protection circuitry close to the bus connector to prevent noise transients from entering the board.
2. Use V_{CC} and ground planes to provide low-inductance power distribution. Note that high-frequency currents tend to follow the path of least inductance and not the path of least resistance.
3. Design the protection components into the direction of the signal path. Do not force the transient currents to divert from the signal path to reach the protection device.
4. Apply 100-nF-to-220-nF bypass capacitors as close as possible to the V_{CC} pins of transceiver, UART, or controller ICs on the board.
5. Use at least two vias for V_{CC} and ground connections of bypass capacitors and protection devices to minimize effective via-inductance.
6. Use 1-kΩ-to-10-kΩ pullup and pulldown resistors for enable lines to limit noise currents in these lines during transient events.
7. Insert series pulse-proof resistors into the A and B bus lines if the TVS clamping voltage is higher than the specified maximum voltage of the transceiver bus terminals. These resistors limit the residual clamping current into the transceiver and prevent it from latching up.
8. While pure TVS protection is sufficient for surge transients up to 1 kV, higher transients require metal-oxide varistors (MOVs) which reduce the transients to a few hundred volts of clamping voltage, and transient blocking units (TBUs) that limit transient current to less than 1 mA.

12.2 Layout Example

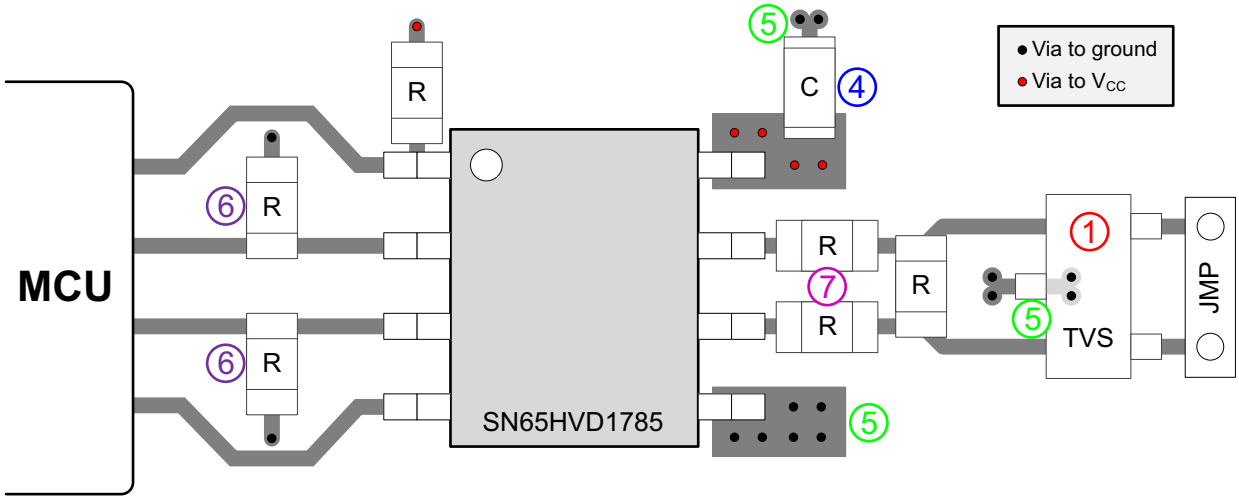

Figure 22. Layout Example (Half-Duplex Transceiver)

Copyright © 2008–2015, Texas Instruments Incorporated

Layout Example (continued)

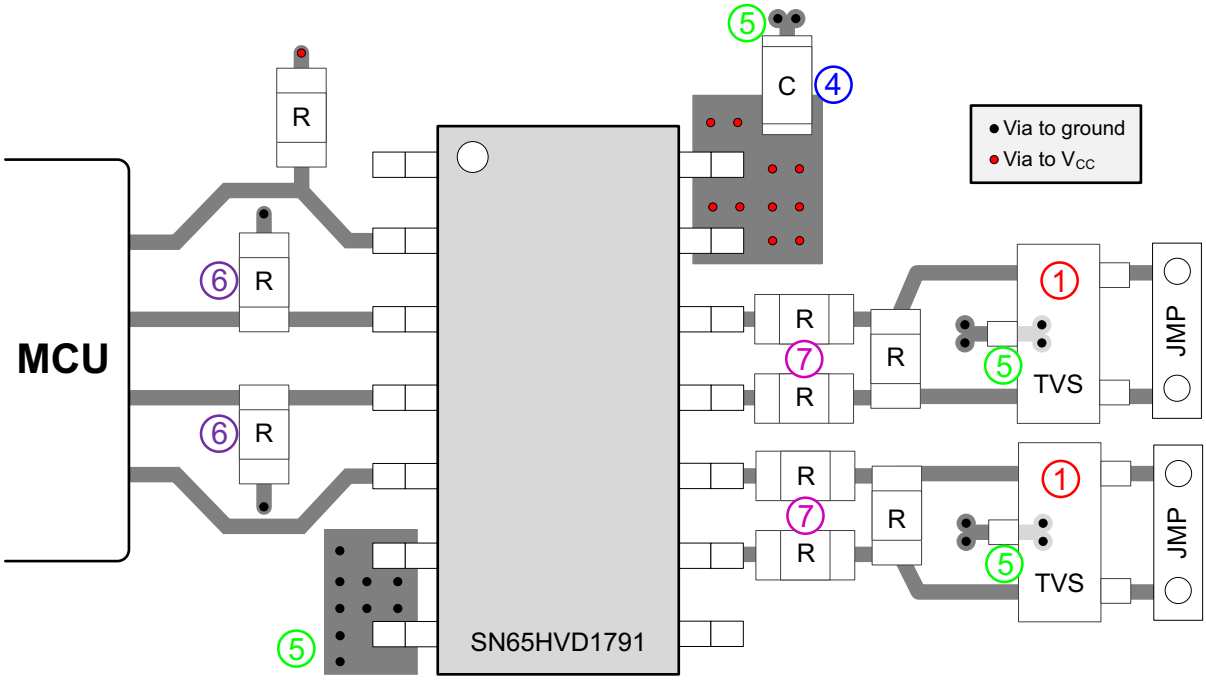

Figure 23. Layout Example (Full-Duplex Transceiver)

13 Device and Documentation Support

13.1 Documentation Support

For related documentation see the following:

SN65HVD1781, *Fault-Protected RS-485 Transceivers With 3.3-V to 5-V Operation*, (SLLS877)

13.2 Related Links

The table below lists quick access links. Categories include technical documents, support and community resources, tools and software, and quick access to sample or buy.

Table 5. Related Links

PARTS	PRODUCT FOLDER	SAMPLE & BUY	TECHNICAL DOCUMENTS	TOOLS & SOFTWARE	SUPPORT & COMMUNITY
SN65HVD1785	Click here	Click here	Click here	Click here	Click here
SN65HVD1786	Click here	Click here	Click here	Click here	Click here
SN65HVD1787	Click here	Click here	Click here	Click here	Click here
SN65HVD1791	Click here	Click here	Click here	Click here	Click here
SN65HVD1792	Click here	Click here	Click here	Click here	Click here
SN65HVD1793	Click here	Click here	Click here	Click here	Click here

Copyright © 2008–2015, Texas Instruments Incorporated

13.3 Community Resources

The following links connect to TI community resources. Linked contents are provided "AS IS" by the respective contributors. They do not constitute TI specifications and do not necessarily reflect TI's views; see TI's Terms of Use.

TI E2E™ Online Community ***TI's Engineer-to-Engineer (E2E) Community.*** Created to foster collaboration among engineers. At e2e.ti.com, you can ask questions, share knowledge, explore ideas and help solve problems with fellow engineers.

Design Support ***TI's Design Support*** Quickly find helpful E2E forums along with design support tools and contact information for technical support.

13.4 Trademarks

E2E is a trademark of Texas Instruments.
All other trademarks are the property of their respective owners.

13.5 Electrostatic Discharge Caution

These devices have limited built-in ESD protection. The leads should be shorted together or the device placed in conductive foam during storage or handling to prevent electrostatic damage to the MOS gates.

13.6 Glossary

SLYZ022 — *TI Glossary*.

This glossary lists and explains terms, acronyms, and definitions.

14 Mechanical, Packaging, and Orderable Information

The following pages include mechanical, packaging, and orderable information. This information is the most current data available for the designated devices. This data is subject to change without notice and revision of this document. For browser-based versions of this data sheet, refer to the left-hand navigation.

Copyright © 2008–2015, Texas Instruments Incorporated

PACKAGING INFORMATION

Orderable Device	Status (1)	Package Type	Package Drawing	Pins	Package Qty	Eco Plan (2)	Lead/Ball Finish (6)	MSL Peak Temp (3)	Op Temp (°C)	Device Marking (4/5)	Samples
SN65HVD1785D	ACTIVE	SOIC	D	8	75	Green (RoHS & no Sb/Br)	CU NIPDAU	Level-1-260C-UNLIM	-40 to 105	VP1785	Samples
SN65HVD1785DG4	ACTIVE	SOIC	D	8	75	Green (RoHS & no Sb/Br)	CU NIPDAU	Level-1-260C-UNLIM	-40 to 105	VP1785	Samples
SN65HVD1785DR	ACTIVE	SOIC	D	8	2500	Green (RoHS & no Sb/Br)	CU NIPDAU	Level-1-260C-UNLIM	-40 to 105	VP1785	Samples
SN65HVD1785DRG4	ACTIVE	SOIC	D	8	2500	Green (RoHS & no Sb/Br)	CU NIPDAU	Level-1-260C-UNLIM	-40 to 105	VP1785	Samples
SN65HVD1785P	ACTIVE	PDIP	P	8	50	Green (RoHS & no Sb/Br)	CU NIPDAU	N / A for Pkg Type	-40 to 105	65HVD1785	Samples
SN65HVD1786D	ACTIVE	SOIC	D	8	75	Green (RoHS & no Sb/Br)	CU NIPDAU	Level-1-260C-UNLIM	-40 to 105	VP1786	Samples
SN65HVD1786DR	ACTIVE	SOIC	D	8	2500	Green (RoHS & no Sb/Br)	CU NIPDAU	Level-1-260C-UNLIM	-40 to 105	VP1786	Samples
SN65HVD1786DRG4	ACTIVE	SOIC	D	8	2500	Green (RoHS & no Sb/Br)	CU NIPDAU	Level-1-260C-UNLIM	-40 to 105	VP1786	Samples
SN65HVD1786P	ACTIVE	PDIP	P	8	50	Green (RoHS & no Sb/Br)	CU NIPDAU	N / A for Pkg Type	-40 to 105	65HVD1786	Samples
SN65HVD1787D	ACTIVE	SOIC	D	8	75	Green (RoHS & no Sb/Br)	CU NIPDAU	Level-1-260C-UNLIM	-40 to 105	VP1787	Samples
SN65HVD1787DR	ACTIVE	SOIC	D	8	2500	Green (RoHS & no Sb/Br)	CU NIPDAU	Level-1-260C-UNLIM	-40 to 105	VP1787	Samples
SN65HVD1787P	ACTIVE	PDIP	P	8	50	Green (RoHS & no Sb/Br)	CU NIPDAU	N / A for Pkg Type	-40 to 105	65HVD1787	Samples
SN65HVD1791D	ACTIVE	SOIC	D	14	50	Green (RoHS & no Sb/Br)	CU NIPDAU	Level-1-260C-UNLIM	-40 to 105	VP1791	Samples
SN65HVD1791DG4	ACTIVE	SOIC	D	14	50	Green (RoHS & no Sb/Br)	CU NIPDAU	Level-1-260C-UNLIM	-40 to 105	VP1791	Samples
SN65HVD1791DR	ACTIVE	SOIC	D	14	2500	Green (RoHS & no Sb/Br)	CU NIPDAU	Level-1-260C-UNLIM	-40 to 105	VP1791	Samples
SN65HVD1791DRG4	ACTIVE	SOIC	D	14	2500	Green (RoHS & no Sb/Br)	CU NIPDAU	Level-1-260C-UNLIM	-40 to 105	VP1791	Samples
SN65HVD1792D	ACTIVE	SOIC	D	14	50	Green (RoHS & no Sb/Br)	CU NIPDAU	Level-1-260C-UNLIM	-40 to 105	VP1792	Samples

Orderable Device	Status (1)	Package Type	Package Drawing	Pins	Package Qty	Eco Plan (2)	Lead/Ball Finish (6)	MSL Peak Temp (3)	Op Temp (°C)	Device Marking (4/5)	Samples
SN65HVD1792DR	ACTIVE	SOIC	D	14	2500	Green (RoHS & no Sb/Br)	CU NIPDAU	Level-1-260C-UNLIM	-40 to 105	VP1792	Samples
SN65HVD1793D	ACTIVE	SOIC	D	14	50	Green (RoHS & no Sb/Br)	CU NIPDAU	Level-1-260C-UNLIM	-40 to 105	VP1793	Samples
SN65HVD1793DR	ACTIVE	SOIC	D	14	2500	Green (RoHS & no Sb/Br)	CU NIPDAU	Level-1-260C-UNLIM	-40 to 105	VP1793	Samples

(1) The marketing status values are defined as follows:
ACTIVE: Product device recommended for new designs.
LIFEBUY: TI has announced that the device will be discontinued, and a lifetime-buy period is in effect.
NRND: Not recommended for new designs. Device is in production to support existing customers, but TI does not recommend using this part in a new design.
PREVIEW: Device has been announced but is not in production. Samples may or may not be available.
OBSOLETE: TI has discontinued the production of the device.

(2) **RoHS:** TI defines "RoHS" to mean semiconductor products that are compliant with the current EU RoHS requirements for all 10 RoHS substances, including the requirement that RoHS substance do not exceed 0.1% by weight in homogeneous materials. Where designed to be soldered at high temperatures, "RoHS" products are suitable for use in specified lead-free processes. TI may reference these types of products as "Pb-Free".
RoHS Exempt: TI defines "RoHS Exempt" to mean products that contain lead but are compliant with EU RoHS pursuant to a specific EU RoHS exemption.
Green: TI defines "Green" to mean the content of Chlorine (Cl) and Bromine (Br) based flame retardants meet JS709B low halogen requirements of <=1000ppm threshold. Antimony trioxide based flame retardants must also meet the <=1000ppm threshold requirement.

(3) MSL, Peak Temp. - The Moisture Sensitivity Level rating according to the JEDEC industry standard classifications, and peak solder temperature.

(4) There may be additional marking, which relates to the logo, the lot trace code information, or the environmental category on the device.

(5) Multiple Device Markings will be inside parentheses. Only one Device Marking contained in parentheses and separated by a "~" will appear on a device. If a line is indented then it is a continuation of the previous line and the two combined represent the entire Device Marking for that device.

(6) Lead/Ball Finish - Orderable Devices may have multiple material finish options. Finish options are separated by a vertical ruled line. Lead/Ball Finish values may wrap to two lines if the finish value exceeds the maximum column width.

Important Information and Disclaimer: The information provided on this page represents TI's knowledge and belief as of the date that it is provided. TI bases its knowledge and belief on information provided by third parties, and makes no representation or warranty as to the accuracy of such information. Efforts are underway to better integrate information from third parties. TI has taken and continues to take reasonable steps to provide representative and accurate information but may not have conducted destructive testing or chemical analysis on incoming materials and chemicals. TI and TI suppliers consider certain information to be proprietary, and thus CAS numbers and other limited information may not be available for release.

In no event shall TI's liability arising out of such information exceed the total purchase price of the TI part(s) at issue in this document sold by TI to Customer on an annual basis.

OTHER QUALIFIED VERSIONS OF SN65HVD1792 :

- Enhanced Product: SN65HVD1792-EP

NOTE: Qualified Version Definitions:

- Enhanced Product - Supports Defense, Aerospace and Medical Applications

TAPE AND REEL INFORMATION

REEL DIMENSIONS

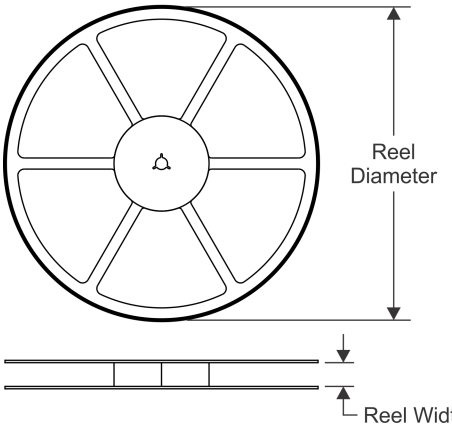

TAPE DIMENSIONS

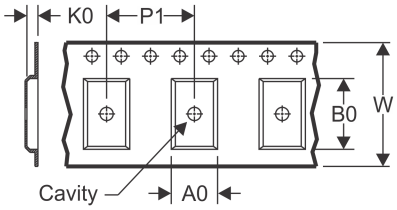

A0	Dimension designed to accommodate the component width
B0	Dimension designed to accommodate the component length
K0	Dimension designed to accommodate the component thickness
W	Overall width of the carrier tape
P1	Pitch between successive cavity centers

QUADRANT ASSIGNMENTS FOR PIN 1 ORIENTATION IN TAPE

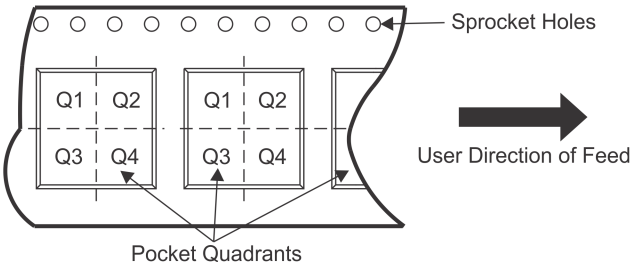

*All dimensions are nominal

Device	Package Type	Package Drawing	Pins	SPQ	Reel Diameter (mm)	Reel Width W1 (mm)	A0 (mm)	B0 (mm)	K0 (mm)	P1 (mm)	W (mm)	Pin1 Quadrant
SN65HVD1785DR	SOIC	D	8	2500	330.0	12.4	6.4	5.2	2.1	8.0	12.0	Q1
SN65HVD1786DR	SOIC	D	8	2500	330.0	12.4	6.4	5.2	2.1	8.0	12.0	Q1
SN65HVD1787DR	SOIC	D	8	2500	330.0	12.4	6.4	5.2	2.1	8.0	12.0	Q1
SN65HVD1791DR	SOIC	D	14	2500	330.0	16.4	6.5	9.0	2.1	8.0	16.0	Q1
SN65HVD1792DR	SOIC	D	14	2500	330.0	16.4	6.5	9.0	2.1	8.0	16.0	Q1
SN65HVD1793DR	SOIC	D	14	2500	330.0	16.4	6.5	9.0	2.1	8.0	16.0	Q1

TAPE AND REEL BOX DIMENSIONS

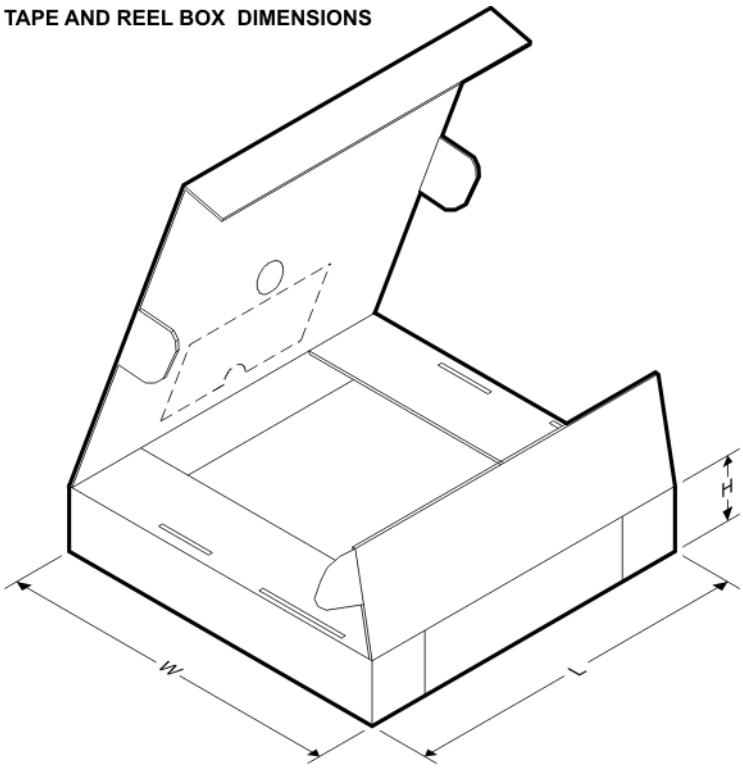

*All dimensions are nominal

Device	Package Type	Package Drawing	Pins	SPQ	Length (mm)	Width (mm)	Height (mm)
SN65HVD1785DR	SOIC	D	8	2500	367.0	367.0	35.0
SN65HVD1786DR	SOIC	D	8	2500	367.0	367.0	35.0
SN65HVD1787DR	SOIC	D	8	2500	367.0	367.0	35.0
SN65HVD1791DR	SOIC	D	14	2500	367.0	367.0	38.0
SN65HVD1792DR	SOIC	D	14	2500	367.0	367.0	38.0
SN65HVD1793DR	SOIC	D	14	2500	367.0	367.0	38.0

P (R–PDIP–T8) PLASTIC DUAL–IN–LINE PACKAGE

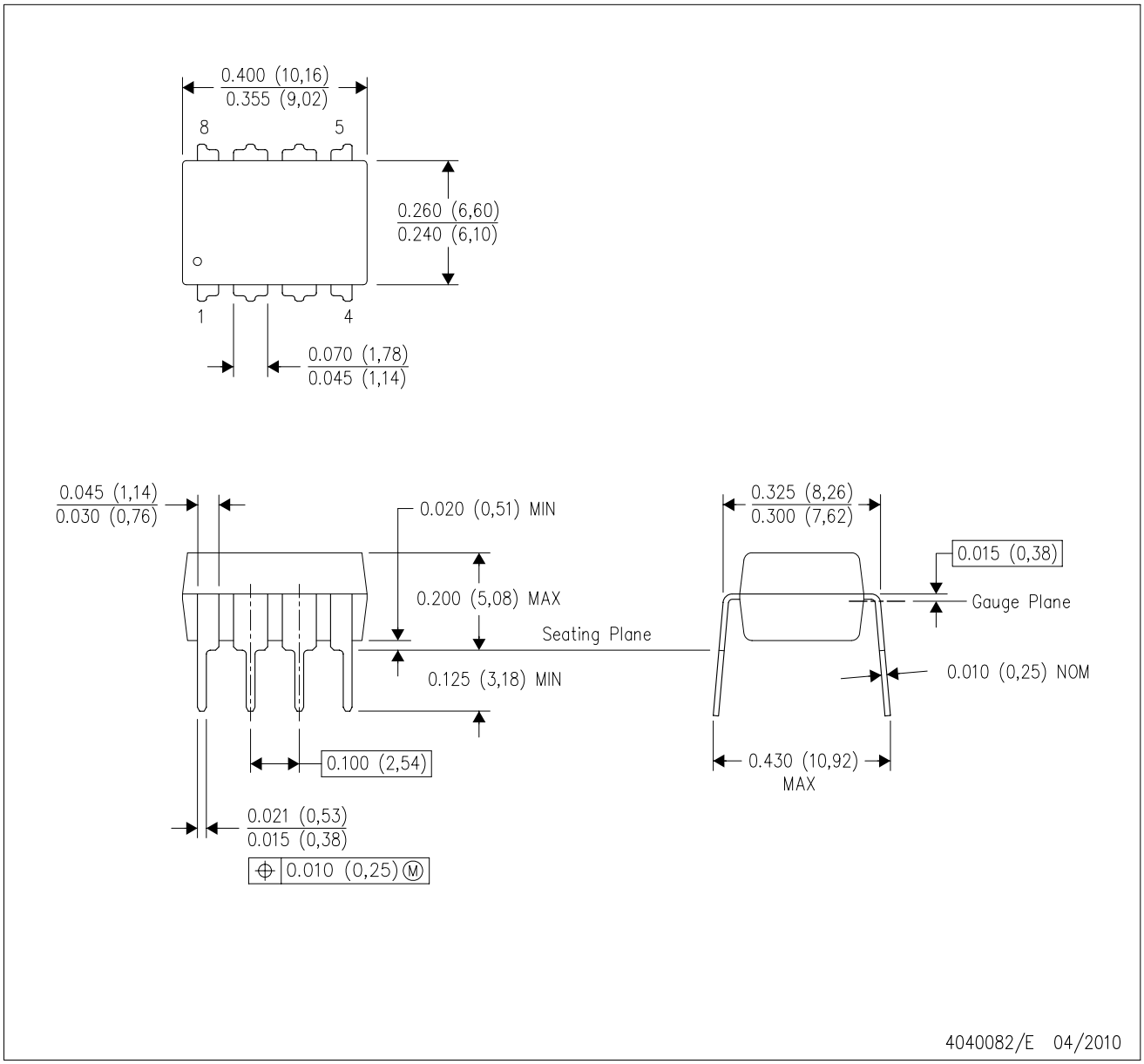

NOTES:
A. All linear dimensions are in inches (millimeters).
B. This drawing is subject to change without notice.
C. Falls within JEDEC MS–001 variation BA.

D (R–PDSO–G14) PLASTIC SMALL OUTLINE

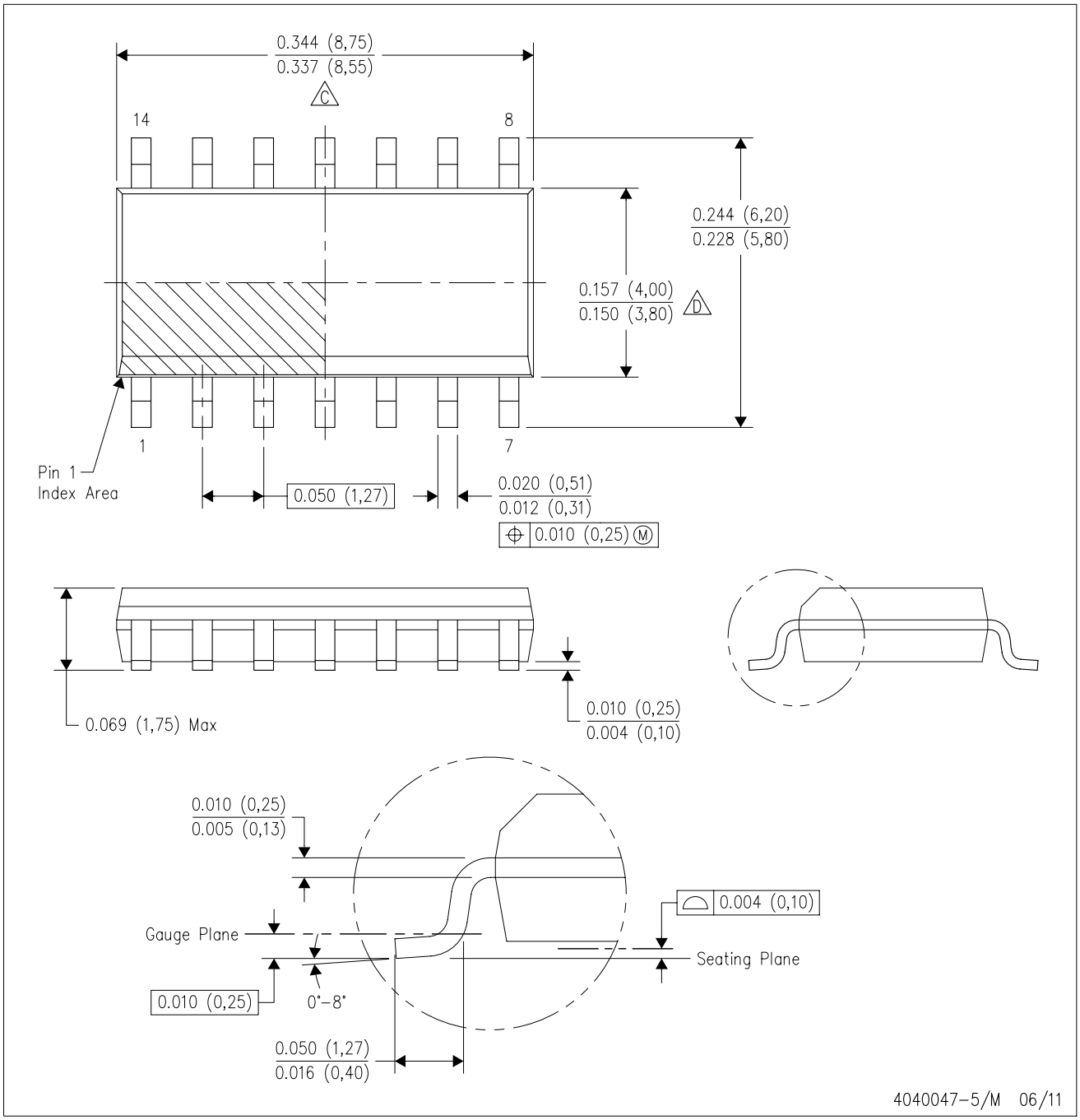

NOTES:
A. All linear dimensions are in inches (millimeters).
B. This drawing is subject to change without notice.
C. Body length does not include mold flash, protrusions, or gate burrs. Mold flash, protrusions, or gate burrs shall not exceed 0.006 (0,15) each side.
D. Body width does not include interlead flash. Interlead flash shall not exceed 0.017 (0,43) each side.
E. Reference JEDEC MS–012 variation AB.

D (R–PDSO–G14) PLASTIC SMALL OUTLINE

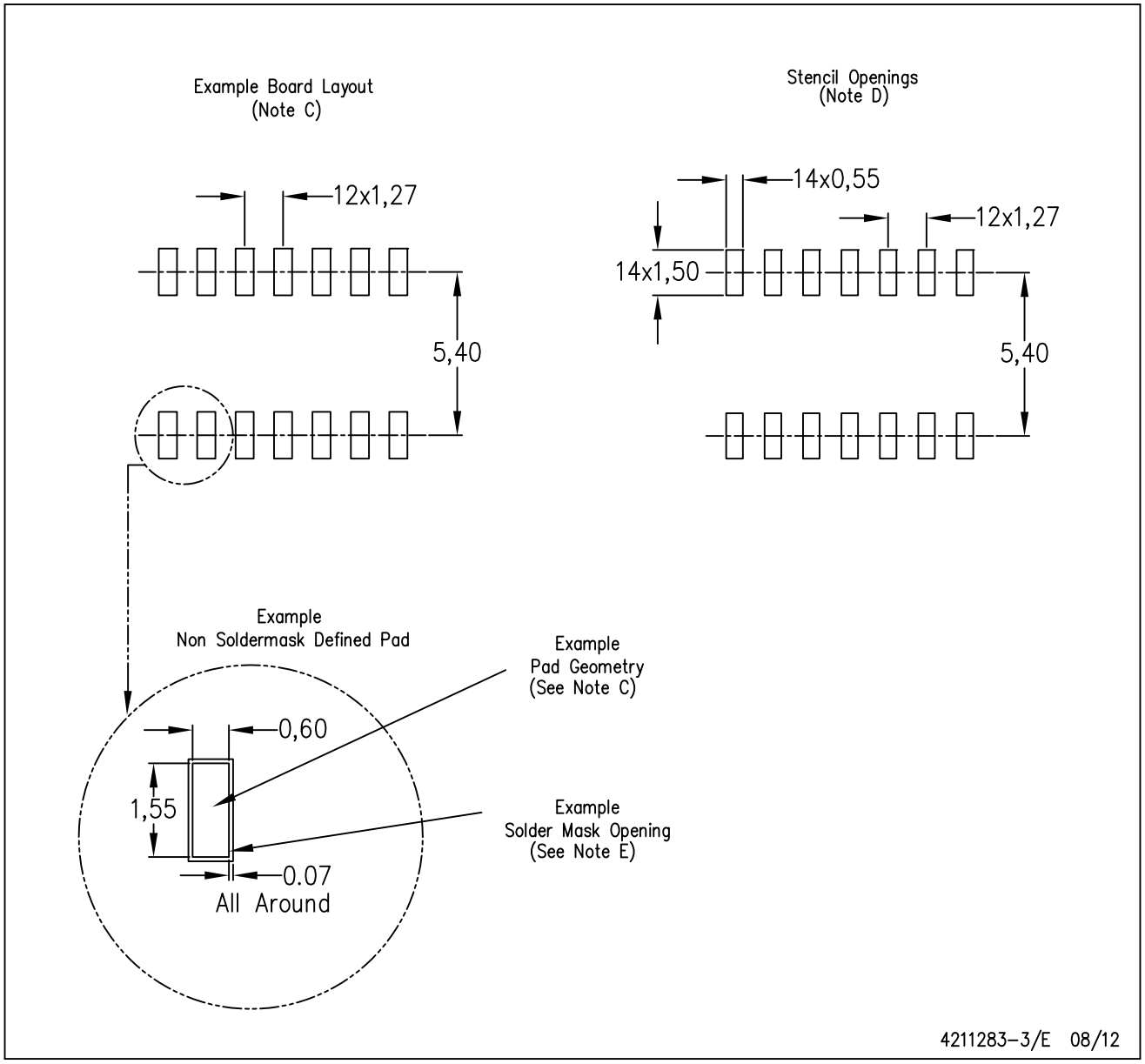

NOTES:
A. All linear dimensions are in millimeters.
B. This drawing is subject to change without notice.
C. Publication IPC–7351 is recommended for alternate designs.
D. Laser cutting apertures with trapezoidal walls and also rounding corners will offer better paste release. Customers should contact their board assembly site for stencil design recommendations. Refer to IPC–7525 for other stencil recommendations.
E. Customers should contact their board fabrication site for solder mask tolerances between and around signal pads.

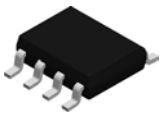

PACKAGE OUTLINE

D0008A

SOIC - 1.75 mm max height

SMALL OUTLINE INTEGRATED CIRCUIT

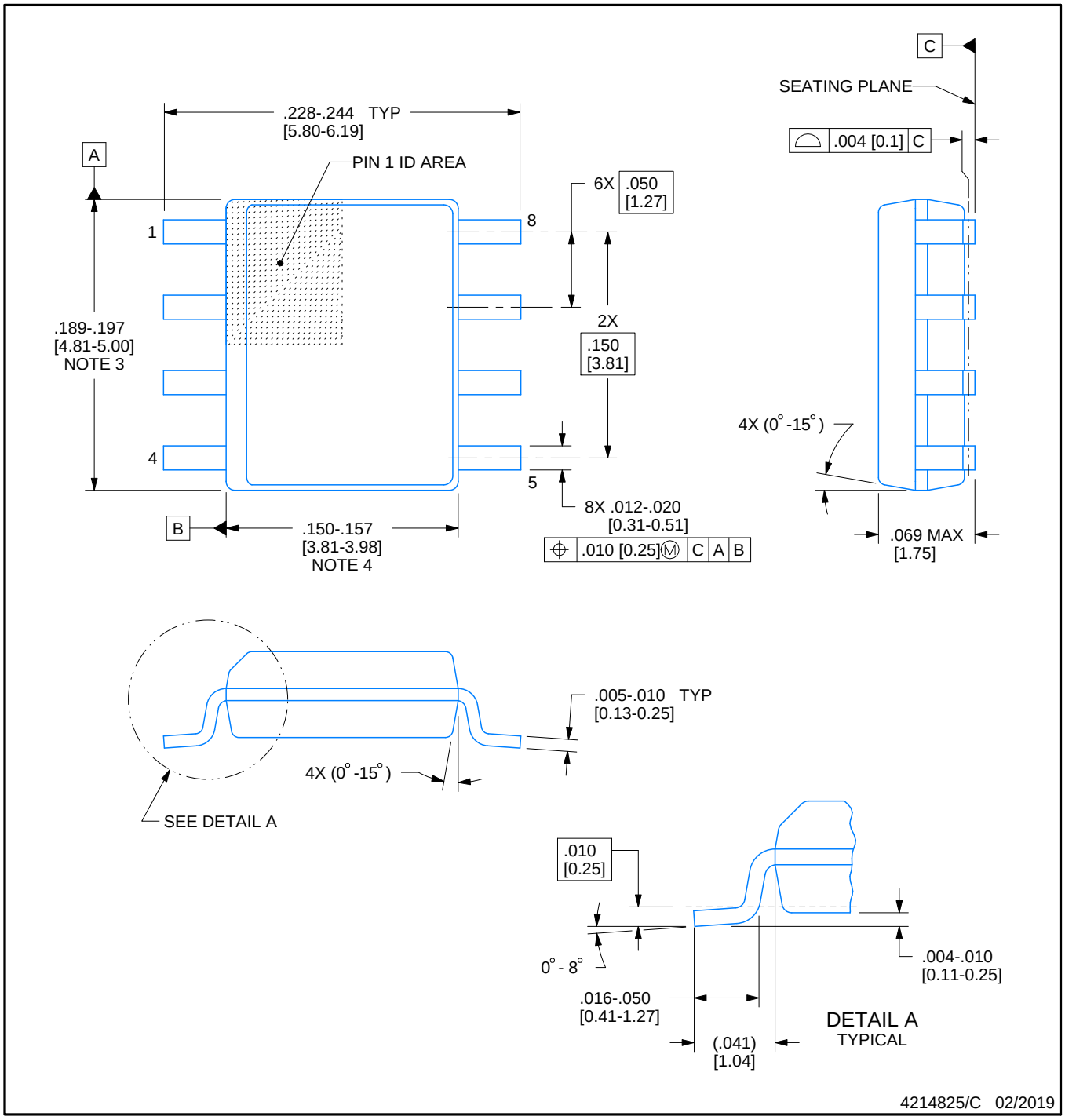

NOTES:

1. Linear dimensions are in inches [millimeters]. Dimensions in parenthesis are for reference only. Controlling dimensions are in inches. Dimensioning and tolerancing per ASME Y14.5M.
2. This drawing is subject to change without notice.
3. This dimension does not include mold flash, protrusions, or gate burrs. Mold flash, protrusions, or gate burrs shall not exceed .006 [0.15] per side.
4. This dimension does not include interlead flash.
5. Reference JEDEC registration MS-012, variation AA.

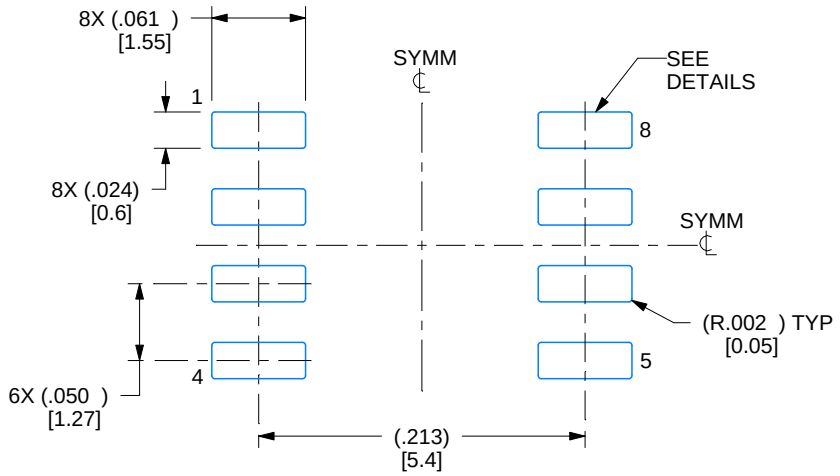

LAND PATTERN EXAMPLE
EXPOSED METAL SHOWN
SCALE:8X

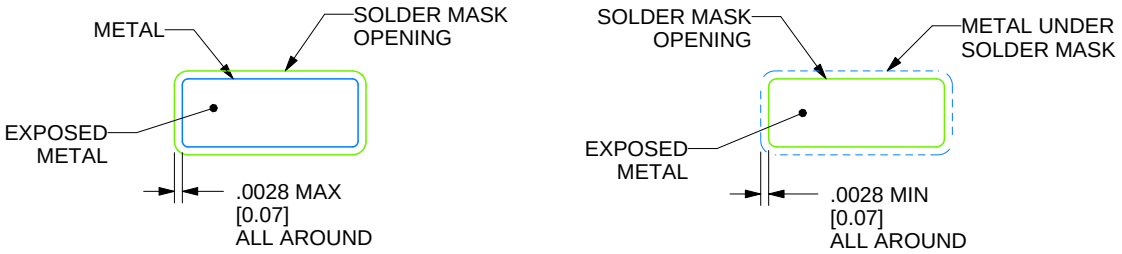

SOLDER MASK DETAILS

4214825/C 02/2019

NOTES: (continued)

6. Publication IPC-7351 may have alternate designs.
7. Solder mask tolerances between and around signal pads can vary based on board fabrication site.

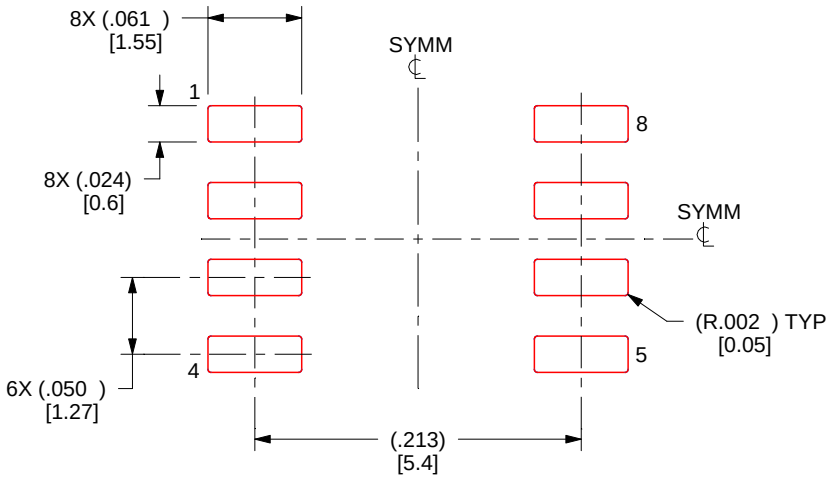

SOLDER PASTE EXAMPLE
BASED ON .005 INCH [0.125 MM] THICK STENCIL
SCALE:8X

4214825/C 02/2019

NOTES: (continued)

8. Laser cutting apertures with trapezoidal walls and rounded corners may offer better paste release. IPC-7525 may have alternate design recommendations.
9. Board assembly site may have different recommendations for stencil design.

IMPORTANT NOTICE AND DISCLAIMER

TI PROVIDES TECHNICAL AND RELIABILITY DATA (INCLUDING DATASHEETS), DESIGN RESOURCES (INCLUDING REFERENCE DESIGNS), APPLICATION OR OTHER DESIGN ADVICE, WEB TOOLS, SAFETY INFORMATION, AND OTHER RESOURCES “AS IS” AND WITH ALL FAULTS, AND DISCLAIMS ALL WARRANTIES, EXPRESS AND IMPLIED, INCLUDING WITHOUT LIMITATION ANY IMPLIED WARRANTIES OF MERCHANTABILITY, FITNESS FOR A PARTICULAR PURPOSE OR NON-INFRINGEMENT OF THIRD PARTY INTELLECTUAL PROPERTY RIGHTS.

These resources are intended for skilled developers designing with TI products. You are solely responsible for (1) selecting the appropriate TI products for your application, (2) designing, validating and testing your application, and (3) ensuring your application meets applicable standards, and any other safety, security, or other requirements. These resources are subject to change without notice. TI grants you permission to use these resources only for development of an application that uses the TI products described in the resource. Other reproduction and display of these resources is prohibited. No license is granted to any other TI intellectual property right or to any third party intellectual property right. TI disclaims responsibility for, and you will fully indemnify TI and its representatives against, any claims, damages, costs, losses, and liabilities arising out of your use of these resources.

TI’s products are provided subject to TI’s Terms of Sale (www.ti.com/legal/termsofsale.html) or other applicable terms available either on ti.com or provided in conjunction with such TI products. TI’s provision of these resources does not expand or otherwise alter TI’s applicable warranties or warranty disclaimers for TI products.

Mailing Address: Texas Instruments, Post Office Box 655303, Dallas, Texas 75265
Copyright © 2019, Texas Instruments Incorporated

Looking for pricing, stock, or lifecycle information?

Click below to explore more details on WIN SOURCE:

- View SN65HVD1787DR on WIN SOURCE
- Texas Instruments Information

Optimize Your Supply Chain with WIN SOURCE Solutions

- Global Sourcing Solution
- Obsolete Management
- Cost Control Management
- Shortage Management
- Alternative Solution
- Excess Inventory Management