THE DATASHEET OF

ADG736LBRMZ

www.win-source.net 0086-755-83957316

CMOS Low Voltage 2.5 Ω Dual SPDT Switch

ADG736L

FEATURES

1.8 V to 5.5 V single supply
2.5 Ω (typical) on resistance
Low on-resistance flatness
Guaranteed leakage performance over −40°C to +85°C
−3 dB bandwidth > 200 MHz
Rail-to-rail operation
10-lead MSOP package
Fast switching times
t_{ON} 16 ns
t_{OFF} 8 ns
Typical power consumption (<0.01 µW)
TTL/CMOS compatible

APPLICATIONS

USB 1.1 signal switching circuits
Cell phones
PDAs
Battery-powered systems
Communication systems
Sample-and-hold systems
Audio signal routing
Audio and video switching
Mechanical reed relay replacement

FUNCTIONAL BLOCK DIAGRAM

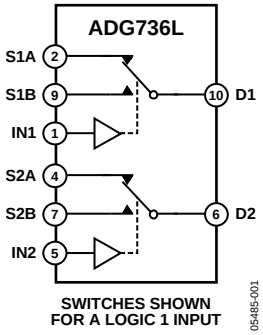

Figure 1.

GENERAL DESCRIPTION

The ADG736L is a monolithic device comprising two independently selectable CMOS single pole, double throw (SPDT) switches. The switches are designed using a submicron process that provides low power dissipation, yet gives high switching speed, low on resistance, low leakage currents, and wide input signal bandwidth.

The on resistance profile is very flat over the full analog signal range. This ensures excellent linearity and low distortion when switching audio signals. Fast switching speed also makes the part suitable for video signal switching.

The ADG736L operates from a single 1.8 V to 5.5 V supply, making it ideally suited to portable and battery-powered instruments.

Each switch conducts equally well in both directions when on; each has an input signal range that extends to the power supplies. The ADG736L exhibits break-before-make switching action.

The ADG736L is available in a 10-lead MSOP.

PRODUCT HIGHLIGHTS

1. 1.8 V to 5.5 V Single-Supply Operation.
2. Guaranteed Leakage Performance.
3. Very Low R_{ON} (4.5 Ω Maximum at 5 V, 8 Ω Maximum at 3 V).
4. Low On Resistance Flatness.
5. −3 dB Bandwidth > 200 MHz.
6. Low Power Dissipation.

Rev. 0
Information furnished by Analog Devices is believed to be accurate and reliable. However, no responsibility is assumed by Analog Devices for its use, nor for any infringements of patents or other rights of third parties that may result from its use. Specifications subject to change without notice. No license is granted by implication or otherwise under any patent or patent rights of Analog Devices. Trademarks and registered trademarks are the property of their respective owners.

One Technology Way, P.O. Box 9106, Norwood, MA 02062-9106, U.S.A.
Tel: 781.329.4700 **www.analog.com**
Fax: 781.461.3113
©2007 Analog Devices, Inc. All rights reserved.

TABLE OF CONTENTS

Features 1
Applications 1
General Description 1
Functional Block Diagram 1
Product Highlights 1
Revision History 2
Specifications 3
Absolute Maximum Ratings 5
ESD Caution 5
Pin Configuration and Function Descriptions 6
Typical Performance Characteristics 7
Test Circuits 9
Terminology 10
Applications Information 11
Outline Dimensions 12
Ordering Guide 12

REVISION HISTORY

1/07—Revision 0: Initial Version

SPECIFICATIONS

V_{DD} = 5 V ± 10%, GND = 0 V; all specifications −40°C to +85°C, unless otherwise noted.

Table 1.

Parameter	B Version[1] 25°C	B Version[1] −40°C to +85°C	Unit	Test Conditions/Comments
ANALOG SWITCH				
Analog Signal Range		0 V to V_{DD}	V	
On Resistance (R_{ON})	2.5		Ω typ	V_S = 0 V to V_{DD}, I_{DS} = −10 mA; see Figure 10
	4	4.5	Ω max	
On Resistance Match Between Channels (ΔR_{ON})	0.1		Ω typ	V_S = 0 V to V_{DD}, I_{DS} = −10 mA
		0.4	Ω max	
On Resistance Flatness ($R_{FLAT\ (ON)}$)	0.5		Ω typ	V_S = 0 V to V_{DD}, I_{DS} = −10 mA
		1.2	Ω max	
LEAKAGE CURRENTS				V_{DD} = 5.5 V
Source Off Leakage I_S (OFF)	±0.01		nA typ	V_S = 4.5 V/1 V, V_D = 1 V/4.5 V; see Figure 11
	±0.1	±0.3	nA max	
Channel On Leakage I_D, I_S (ON)	±0.01		nA typ	V_S = V_D = 1 V or 4.5 V; see Figure 12
	±0.1	±0.3	nA max	
DIGITAL INPUTS				
Input High Voltage, V_{INH}		2.4	V min	
Input Low Voltage, V_{INL}		0.8	V max	
Input Current, I_{INL} or I_{INH}				
	0.005		µA typ	V_{IN} = V_{INL} or V_{INH}
		±0.1	µA max	
DYNAMIC CHARACTERISTICS[2]				
t_{ON}	12		ns typ	R_L = 300 Ω, C_L = 35 pF
		16	ns max	V_S = 3 V; see Figure 13
t_{OFF}	5		ns typ	R_L = 300 Ω, C_L = 35 pF
		8	ns max	V_S = 3 V; see Figure 13
Break-Before-Make Time Delay, t_D	7		ns typ	R_L = 300 Ω, C_L = 35 pF
		1	ns min	V_{S1} = V_{S2} = 3 V; see Figure 14
Off Isolation	−62		dB typ	R_L = 50 Ω, C_L = 5 pF, f = 10 MHz
	−82		dB typ	R_L = 50 Ω, C_L = 5 pF, f = 1 MHz; see Figure 15
Channel-to-Channel Crosstalk	−62		dB typ	R_L = 50 Ω, C_L = 5 pF, f = 10 MHz
	−82		dB typ	R_L = 50 Ω, C_L = 5 pF, f = 1 MHz; see Figure 16
Bandwidth (−3 dB)	200		MHz typ	R_L = 50 Ω, C_L = 5 pF; see Figure 17
C_S (OFF)	9		pF typ	
C_D, C_S (ON)	32		pF typ	
POWER REQUIREMENTS				V_{DD} = 5.5 V
I_{DD}	0.001		µA typ	Digital inputs = 0 V or 5 V
		1.0	µA max	

[1] Temperature range is −40°C to +85°C for the B version.
[2] Guaranteed by design; not subject to production test.

V_{DD} = 3 V ± 10%, GND = 0 V. All specifications −40°C to +85°C, unless otherwise noted.

Table 2.

Parameter	B Version[1] 25°C	B Version[1] −40°C to +85°C	Unit	Test Conditions/Comments
ANALOG SWITCH				
Analog Signal Range		0 V to V_{DD}	V	
On Resistance (R_{ON})	5	5.5	Ω typ	V_S = 0 V to V_{DD}, I_{DS} = −10 mA; see Figure 10
		8	Ω max	
On Resistance Match Between Channels (ΔR_{ON})	0.1		Ω typ	V_S = 0 V to V_{DD}, I_{DS} = −10 mA
		0.4	Ω max	
On Resistance Flatness ($R_{FLAT\ (ON)}$)		2.5	Ω typ	V_S = 0 V to V_{DD}, I_{DS} = −10 mA
LEAKAGE CURRENTS				V_{DD} = 3.3 V
Source Off Leakage I_S (OFF)	±0.01		nA typ	V_S = 3 V/1 V, V_D = 1 V/3 V; see Figure 11
	±0.1	±0.3	nA max	
Channel On Leakage I_D, I_S (ON)	±0.01		nA typ	V_S = V_D = 1 V or 3 V; see Figure 12
	±0.1	±0.3	nA max	
DIGITAL INPUTS				
Input High Voltage, V_{INH}		2.0	V min	
Input Low Voltage, V_{INL}		0.4	V max	
Input Current, I_{INL} or I_{INH}				
	0.005		µA typ	V_{IN} = V_{INL} or V_{INH}
		±0.1	µA max	
DYNAMIC CHARACTERISTICS[2]				
t_{ON}	14		ns typ	R_L = 300 Ω, C_L = 35 pF
		20	ns max	V_S = 2 V; see Figure 13
t_{OFF}	6		ns typ	R_L = 300 Ω, C_L = 35 pF
		10	ns max	V_S = 2 V; see Figure 13
Break-Before-Make Time Delay, t_D	7		ns typ	R_L = 300 Ω, C_L = 35 pF
		1	ns min	V_{S1} = V_{S2} = 2 V; see Figure 14
Off Isolation	−62		dB typ	R_L = 50 Ω, C_L = 5 pF, f = 10 MHz
	−82		dB typ	R_L = 50 Ω, C_L = 5 pF, f = 1 MHz; see Figure 15
Channel-to-Channel Crosstalk	−62		dB typ	R_L = 50 Ω, C_L = 5 pF, f = 10 MHz
	−82		dB typ	R_L = 50 Ω, C_L = 5 pF, f = 1 MHz; see Figure 16
Bandwidth (−3 dB)	200		MHz typ	R_L = 50 Ω, C_L = 5 pF; see Figure 17
C_S (OFF)	9		pF typ	
C_D, C_S (ON)	32		pF typ	
POWER REQUIREMENTS				V_{DD} = 3.3 V
I_{DD}	0.001		µA typ	Digital inputs = 0 V or 3 V
		1.0	µA max	

[1] Temperature range is −40°C to +85°C for the B version.
[2] Guaranteed by design; not subject to production test.

ABSOLUTE MAXIMUM RATINGS

T_A = 25°C, unless otherwise noted.

Table 3.

Parameter	Rating
V_{DD} to GND	−0.3 V to +6 V
Analog, Digital Inputs[1]	−0.3 V to V_{DD} + 0.3 V or 30 mA, whichever occurs first
Continuous Current, S or D	30 mA
Peak Current, S or D	100 mA (Pulsed at 1 ms, 10% duty cycle maximum)
Operating Temperature Range	
Industrial (B Version)	−40°C to +85°C
Storage Temperature Range	−65°C to +150°C
Junction Temperature	150°C
MSOP Package, Power Dissipation	315 mW
θ_{JA} Thermal Impedance	205°C/W
Lead Temperature (Soldering, 10 sec)	300°C
IR Reflow (Peak Temperature, <20 sec)	235°C
Lead-Free Reflow	
Peak Temperature	260(+0/−5)°C
Time at Peak Temperature	10 sec to 40 sec
ESD	2 kV

[1] Overvoltages at IN, S, or D are clamped by internal diodes. Current should be limited to the maximum ratings given.

Stresses above those listed under Absolute Maximum Ratings may cause permanent damage to the device. This is a stress rating only; functional operation of the device at these or any other conditions above those listed in the operational sections of this specification is not implied. Exposure to absolute maximum rating conditions for extended periods may affect device reliability.

Only one absolute maximum rating may be applied at any one time.

ESD CAUTION

ESD (electrostatic discharge) sensitive device. Charged devices and circuit boards can discharge without detection. Although this product features patented or proprietary protection circuitry, damage may occur on devices subjected to high energy ESD. Therefore, proper ESD precautions should be taken to avoid performance degradation or loss of functionality.

PIN CONFIGURATION AND FUNCTION DESCRIPTIONS

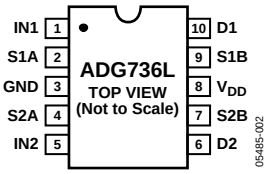

Figure 2. Pin Configuration

Table 4. Pin Function Descriptions

Pin No.	Mnemonic	Description
1	IN1	Logic Control Input.
2	S1A	Source Terminal. May be an input or an output.
3	GND	Ground (0 V) Reference.
4	S2A	Source Terminal. May be an input or an output.
5	IN2	Logic Control Input.
6	D2	Drain Terminal. May be an input or an output.
7	S2B	Source Terminal. May be an input or an output.
8	V_{DD}	Most Positive Power Supply Potential.
9	S1B	Source Terminal. May be an input or an output.
10	D1	Drain Terminal. May be an input or an output.

Table 5. Truth Table

Logic	Switch A	Switch B
0	Off	On
1	On	Off

TYPICAL PERFORMANCE CHARACTERISTICS

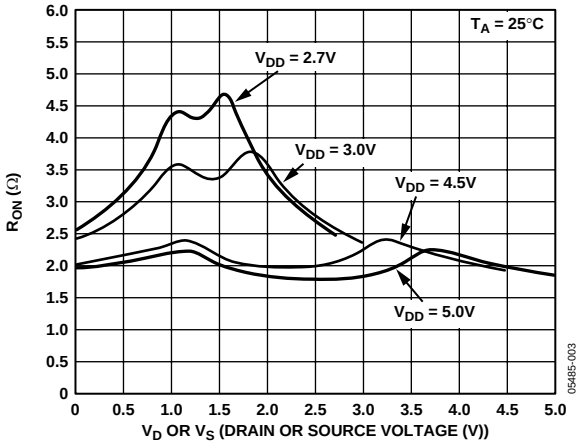

Figure 3. On Resistance as a Function of V_D (V_S) Single Supplies

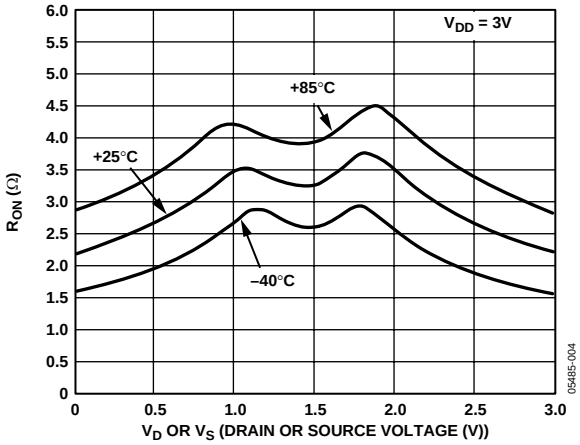

Figure 4. On Resistance as a Function of V_D (V_S) for Different Temperatures V_{DD} = 3 V

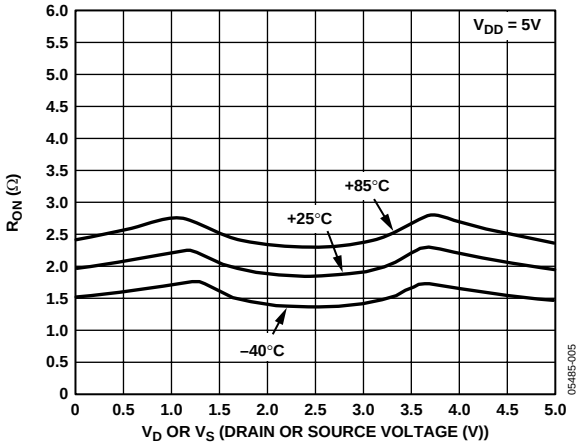

Figure 5. On Resistance as a Function of V_D (V_S) for Different Temperatures V_{DD} = 5 V

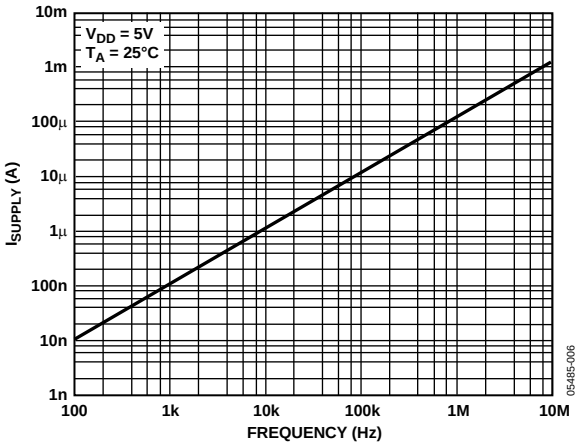

Figure 6. Supply Current vs. Input Switching Frequency

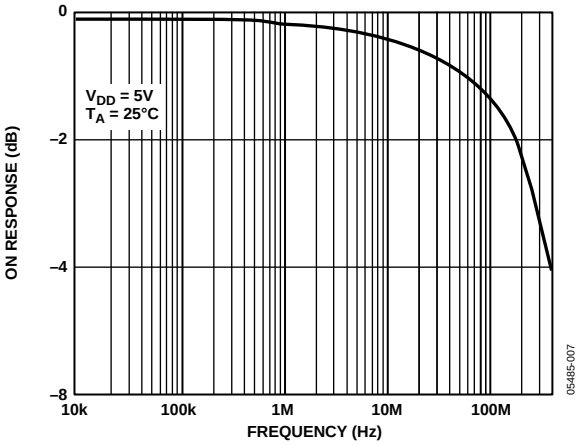

Figure 7. Bandwidth

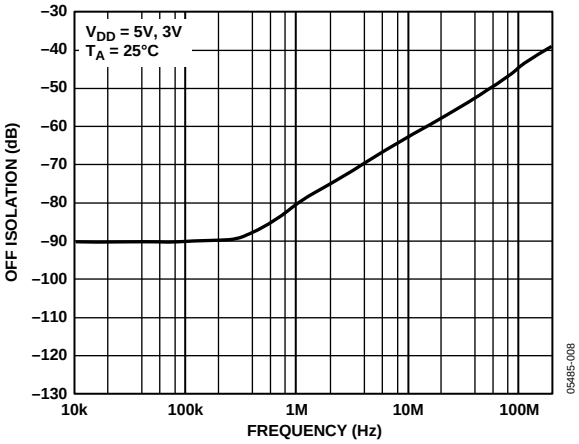

Figure 8. Off Isolation vs. Frequency

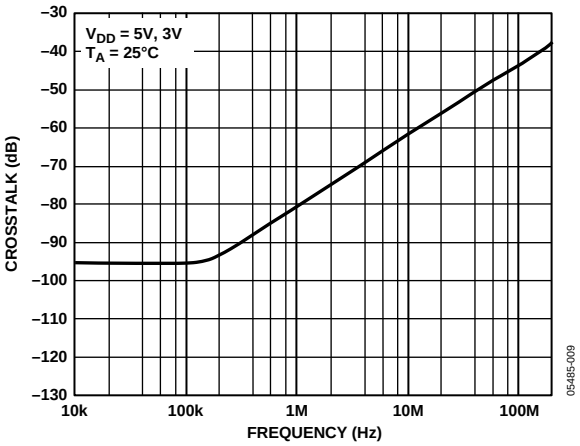

Figure 9. Crosstalk vs. Frequency

TEST CIRCUITS

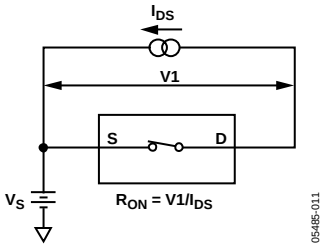

Figure 10. On Resistance

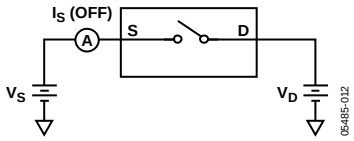

Figure 11. Off Leakage

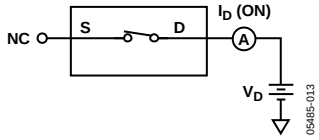

Figure 12. On Leakage

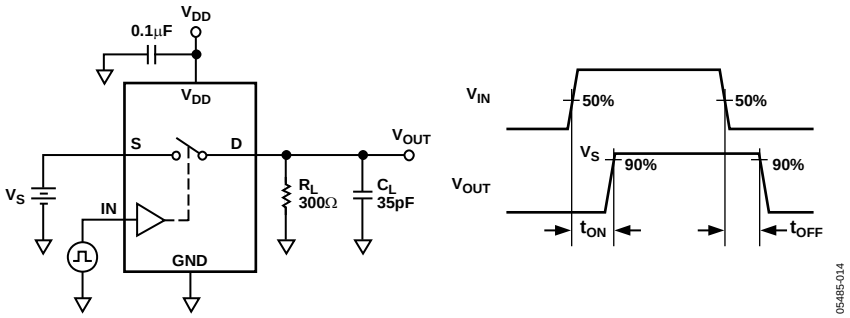

Figure 13. Switching Times

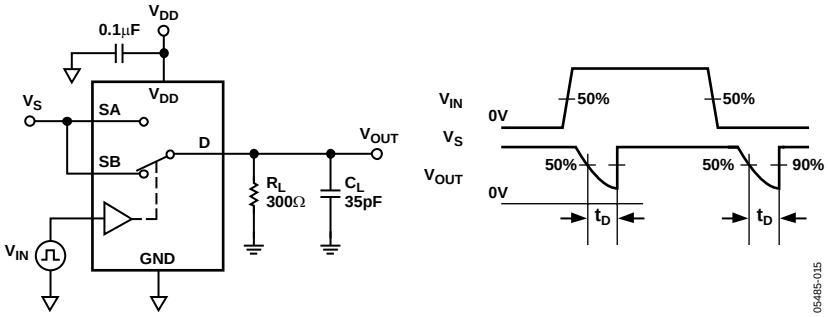

Figure 14. Break-Before-Make Time Delay, t_D

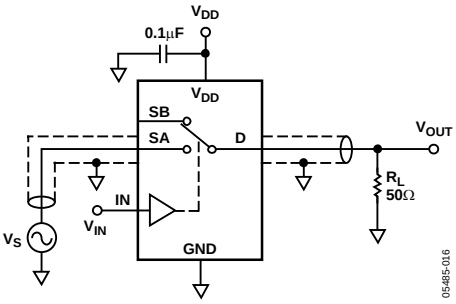

Figure 15. Off Isolation

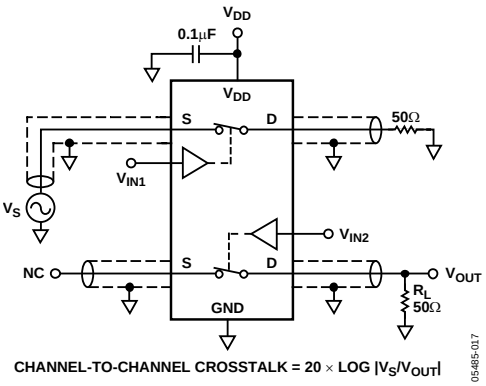

CHANNEL-TO-CHANNEL CROSSTALK = 20 × LOG |VS/VOUT|

Figure 16. Channel-to-Channel Crosstalk

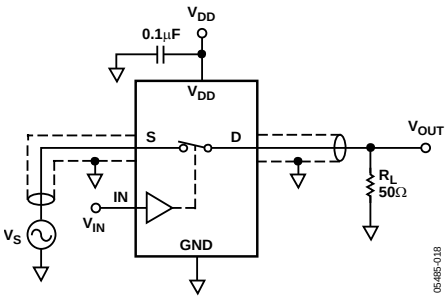

Figure 17. Bandwidth

TERMINOLOGY

R_{ON}
Ohmic resistance between D and S.

ΔR_{ON}
On resistance match between any two channels, such as R_{ON} maximum − R_{ON} minimum.

$R_{FLAT\ (ON)}$
Flatness is defined as the difference between the maximum and minimum value of on resistance as measured over the specified analog signal range.

I_S (OFF)
Source leakage current with the switch off.

I_D, I_S (ON)
Channel leakage current with the switch on.

V_D (V_S)
Analog voltage on Terminal D and Terminal S.

C_S (OFF)
Off switch source capacitance.

C_D, C_S (ON)
On switch capacitance.

t_{ON}
Delay between applying the digital control input and the output switching on (see Figure 13).

t_{OFF}
Delay between applying the digital control input and the output switching off.

t_D
Off time or on time measured between the 90% points of both switches, when switching from one address state to another (see Figure 14).

Crosstalk
A measure of unwanted signal that is coupled through from one channel to another as a result of parasitic capacitance.

Off Isolation
A measure of unwanted signal coupling through an off switch.

Bandwidth
The frequency at which the output is attenuated by −3 dB.

On Response
The frequency response of the on switch.

On Loss
The voltage drop across the on switch, seen on the On Response vs. Frequency plot (see Figure 7) as how many decibels the signal is away from 0 dB at very low frequencies.

APPLICATIONS INFORMATION

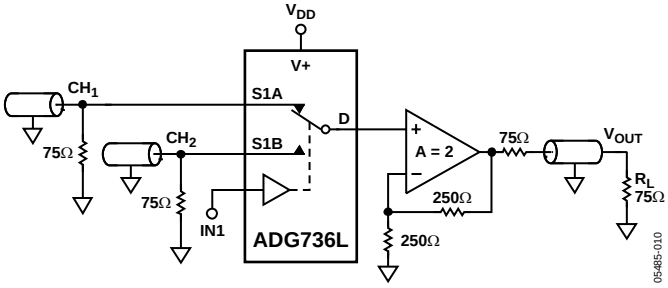

Figure 18. Using the ADG736L to Select Between Two Video Signals

OUTLINE DIMENSIONS

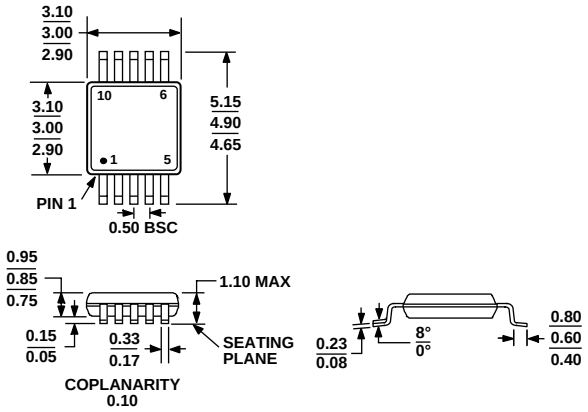

COMPLIANT TO JEDEC STANDARDS MO-187-BA

Figure 19. 10-Lead Mini Small Outline Package [MSOP] (RM-10)
Dimensions shown in millimeters

ORDERING GUIDE

Model	Temperature Range	Package Description	Package Option	Branding
ADG736LBRM	−40°C to +85°C	10-Lead Mini Small Outline Package (MSOP)	RM-10	S0Y
ADG736LBRM-REEL	−40°C to +85°C	10-Lead Mini Small Outline Package (MSOP)	RM-10	S0Y
ADG736LBRM-REEL7	−40°C to +85°C	10-Lead Mini Small Outline Package (MSOP)	RM-10	S0Y
ADG736LBRMZ[1]	−40°C to +85°C	10-Lead Mini Small Outline Package (MSOP)	RM-10	S0Z
ADG736LBRMZ-REEL[1]	−40°C to +85°C	10-Lead Mini Small Outline Package (MSOP)	RM-10	S0Z
ADG736LBRMZ-REEL7[1]	−40°C to +85°C	10-Lead Mini Small Outline Package (MSOP)	RM-10	S0Z

[1] Z = Pb-free part.

©2007 Analog Devices, Inc. All rights reserved. Trademarks and registered trademarks are the property of their respective owners.
D05485-0-1/07(0)

Looking for pricing, stock, or lifecycle information?

Click below to explore more details on WIN SOURCE:

- View ADG736LBRMZ on WIN SOURCE
- Analog Devices Inc. Information

Optimize Your Supply Chain with WIN SOURCE Solutions

- Global Sourcing Solution
- Obsolete Management
- Cost Control Management
- Shortage Management
- Alternative Solution
- Excess Inventory Management