THE DATASHEET OF

PS710AL-1A

www.win-source.net 0086-755-83957316

Solid State Relay
OCMOS FET

PS710A-1A,PS710AL-1A

6-PIN DIP, 0.1 Ω LOW ON-STATE RESISTANCE
1.8 A CONTINUOUS LOAD CURRENT
1-ch Optical Coupled MOS FET

DISCONTINUED

DESCRIPTION

The PS710A-1A and PS710AL-1A are solid state relays containing GaAs LEDs on the light emitting side (input side) and MOS FETs on the output side.

It is suitable for PLC, etc. because of its large continuous load current and low on-state resistance.

The PS710AL-1A has a surface mount type lead.

FEATURES

- Low on-state resistance (R_{on} = 0.1 Ω TYP.)
- Large continuous load current (I_L = 1.8 A)
- 1 channel type (1 a output)
- Low LED operating current (I_F = 2 mA)
- Designed for AC/DC switching line changer
- Small package (6-pin DIP)
- Low offset voltage
- PS710AL-1A: Surface mount type

APPLICATIONS

- Measurement equipment
- FA equipment

The information in this document is subject to change without notice. Before using this document, please confirm that this is the latest version.

Document No. PN10268EJ01V0DS (1st edition)
(Previous No. P14574EJ4V0DS00)
Date Published February 2003 CP(K)

The mark ★ shows major revised points.

PACKAGE DIMENSIONS (in millimeters)

PS710A-1A

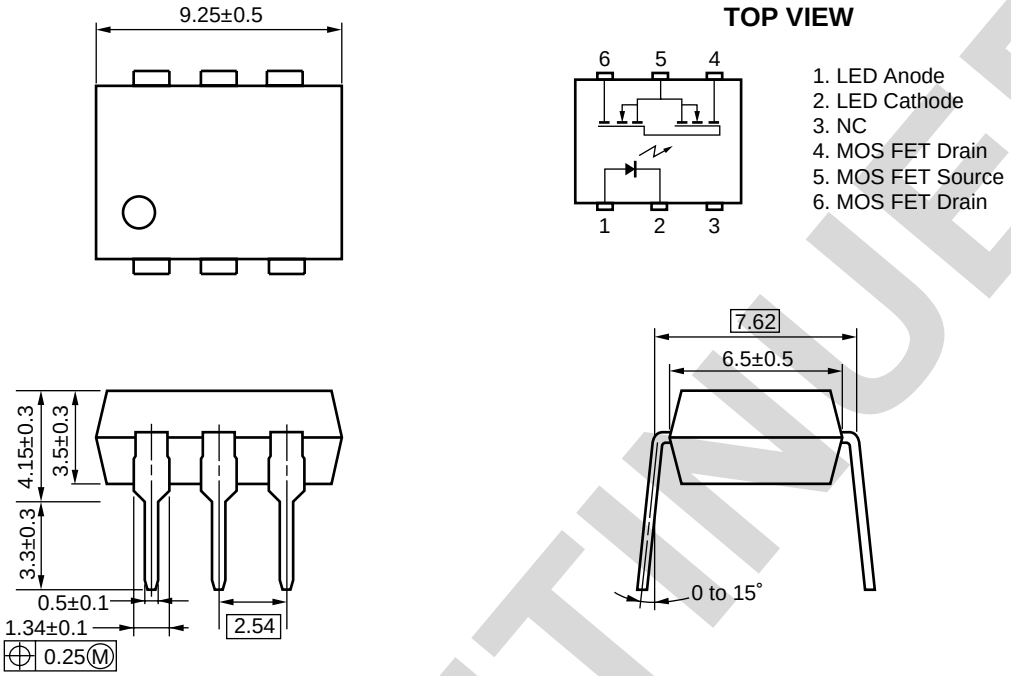

PS710AL-1A

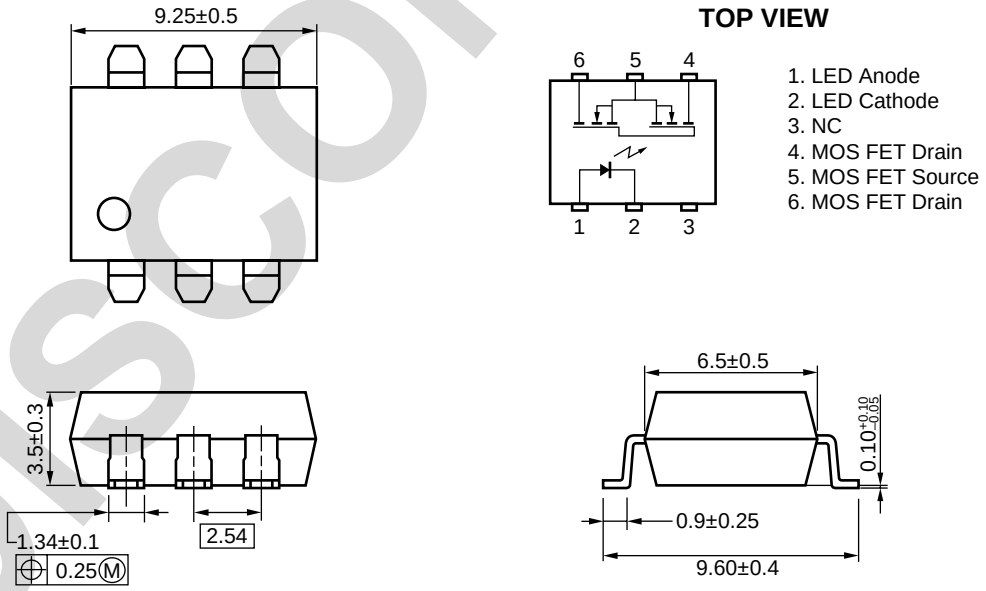

DISCONTINUED

ORDERING INFORMATION (Solder Contains Lead)

Part Number	Package	Packing Style	Application Part Number *1
PS710A-1A	6-pin DIP	Magazine case 50 pcs	PS710A-1A
PS710AL-1A			PS710AL-1A
PS710AL-1A-E3		Embossed Tape 1 000 pcs/reel	
PS710AL-1A-E4			

***1** For the application of the Safety Standard, following part number should be used.

ORDERING INFORMATION (Pb-Free)

Part Number	Package	Packing Style	Application Part Number *1
PS710A-1A-A	6-pin DIP	Magazine case 50 pcs	PS710A-1A
PS710AL-1A-A			PS710AL-1A
PS710AL-1A-E3-A		Embossed Tape 1 000 pcs/reel	
PS710AL-1A-E4-A			

***1** For the application of the Safety Standard, following part number should be used.

DISCONTINUED

ABSOLUTE MAXIMUM RATINGS (T_A = 25 °C, unless otherwise specified)

Parameter			Symbol	Ratings	Unit
Diode	Forward Current (DC)		I_F	50	mA
	Reverse Voltage		V_R	5.0	V
	Power Dissipation		P_D	50	mW
	Peak Forward Current *1		I_{FP}	1	A
MOS FET	Break Down Voltage		V_L	60	V
	Continuous Load Current *2	Connection A	I_L	1.8	A
		Connection B		2.0	
		Connection C		3.6	
	Pulse Load Current *3 (AC/DC Connection)		I_{LP}	3.6	A
	Power Dissipation		P_D	560	mW
Isolation Voltage *4			BV	1 500	Vr.m.s.
Total Power Dissipation			P_T	610	mW
Operating Ambient Temperature			T_A	–40 to +85	°C
Storage Temperature			T_{stg}	–40 to +100	°C

***1** PW = 100 μs, Duty Cycle = 1 %

***2** Conditions: $I_F \geq 2$ mA. The following types of load connections are available.

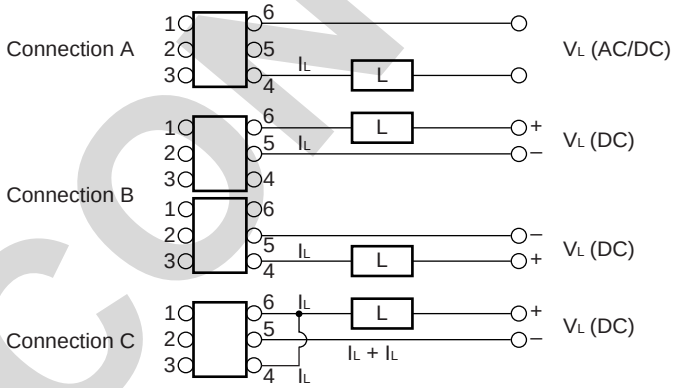

***3** PW = 100 ms, 1 shot

***4** AC voltage for 1 minute at T_A = 25 °C, RH = 60 % between input and output

DISCONTINUED

RECOMMENDED OPERATING CONDITIONS (T_A = 25 °C)

Parameter	Symbol	MIN.	TYP.	MAX.	Unit
LED Operating Current	I_F	2	10	20	mA
LED Off Voltage	V_F	0		0.5	V

ELECTRICAL CHARACTERISTICS (T_A = 25 °C)

Parameter		Symbol	Conditions	MIN.	TYP.	MAX.	Unit
Diode	Forward Voltage	V_F	I_F = 10 mA		1.2	1.4	V
	Reverse Current	I_R	V_R = 5 V			5.0	μA
MOS FET	Off-state Leakage Current	I_{Loff}	V_D = 60 V			1.0	μA
	Output Capacitance	C_{out}	V_D = 0 V, f = 1 MHz		320		pF
Coupled	LED On-state Current	I_{Fon}	I_L = 1.8 A			2.0	mA
	On-state Resistance	R_{on}	I_F = 10 mA, I_L = 1.8 A, t ≤ 10 ms		0.1	0.2	Ω
	Turn-on Time *1	t_{on}	I_F = 10 mA, V_O = 5 V, R_L = 500 Ω, PW ≥ 10 ms		1.0	3.0	ms
	Turn-off Time *1	t_{off}			0.05	1.0	
	Isolation Resistance	R_{I-O}	V_{I-O} = 1.0 kV_{DC}	10^9			Ω
	Isolation Capacitance	C_{I-O}	V = 0 V, f = 1 MHz		0.5		pF

***1** Test Circuit for Switching Time

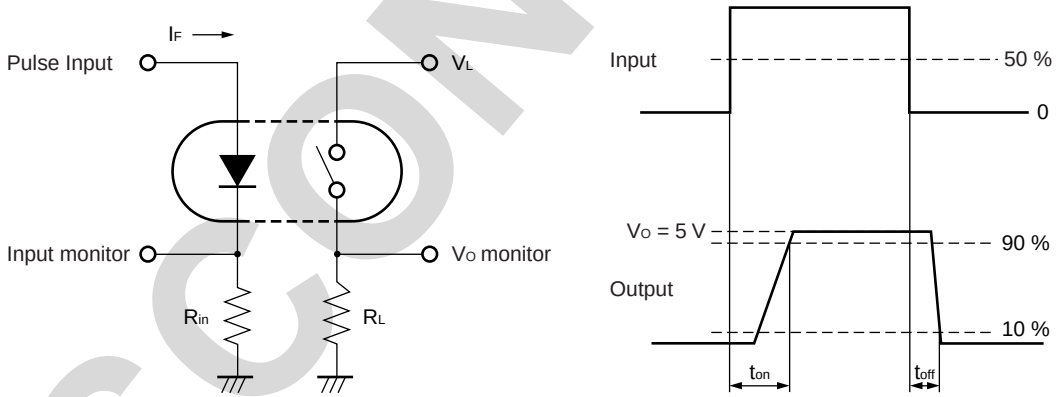

DISCONTINUED

TYPICAL CHARACTERISTICS (T_A = 25 °C, unless otherwise specified)

MAXIMUM FORWARD CURRENT vs. AMBIENT TEMPERATURE

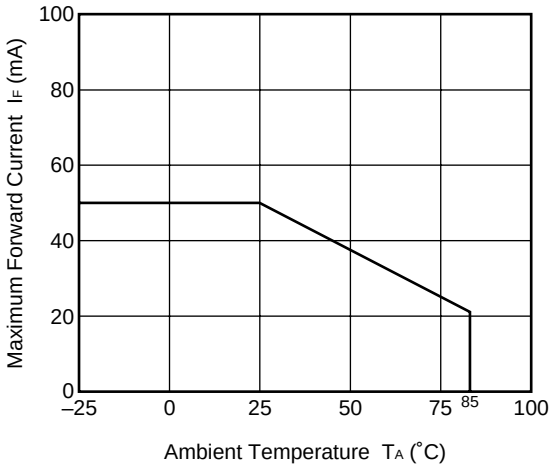

MAXIMUM LOAD CURRENT vs. AMBIENT TEMPERATURE

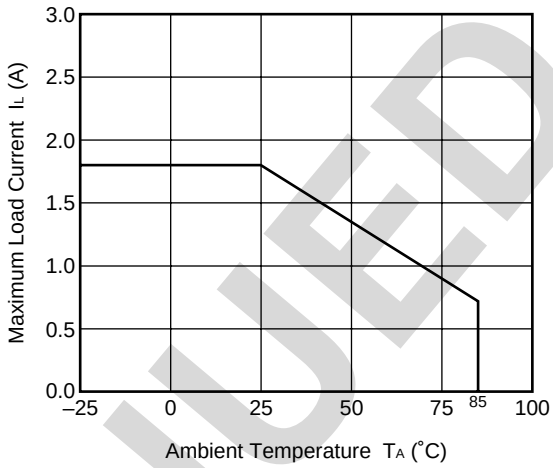

FORWARD VOLTAGE vs. AMBIENT TEMPERATURE

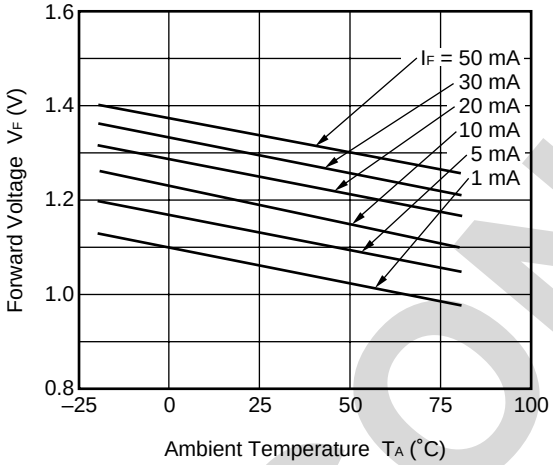

OUTPUT CAPACITANCE vs. APPLIED VOLTAGE

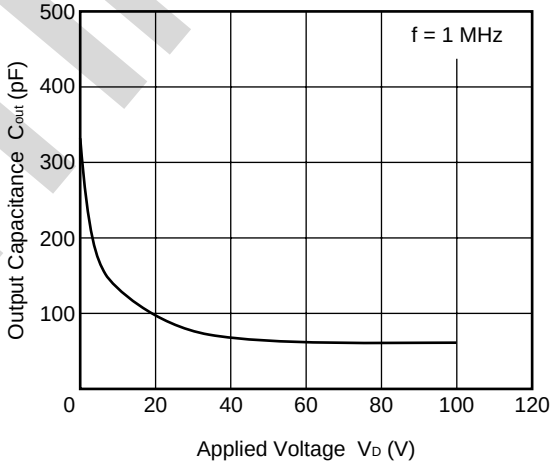

OFF-STATE LEAKAGE CURRENT vs. AMBIENT TEMPERATURE

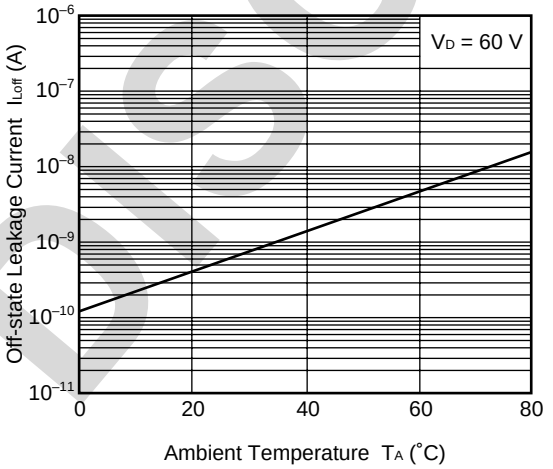

LOAD CURRENT vs. LOAD VOLTAGE

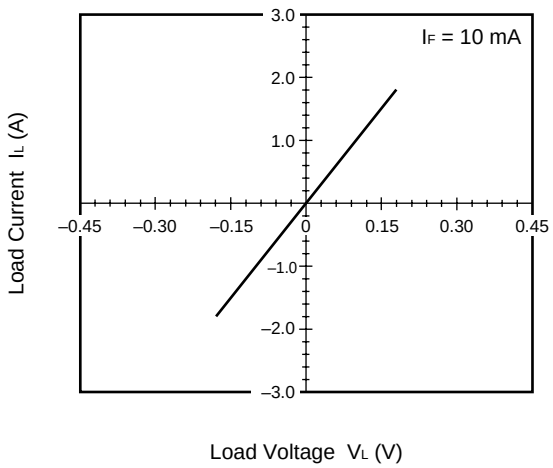

DISCONTINUED

NORMALIZED ON-STATE RESISTANCE vs. AMBIENT TEMPERATURE

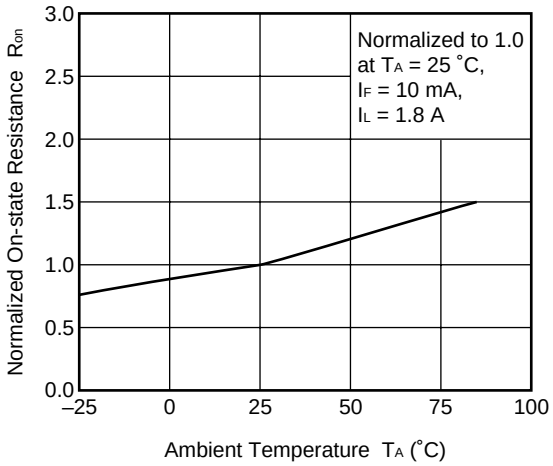

ON-STATE RESISTANCE DISTRIBUTION

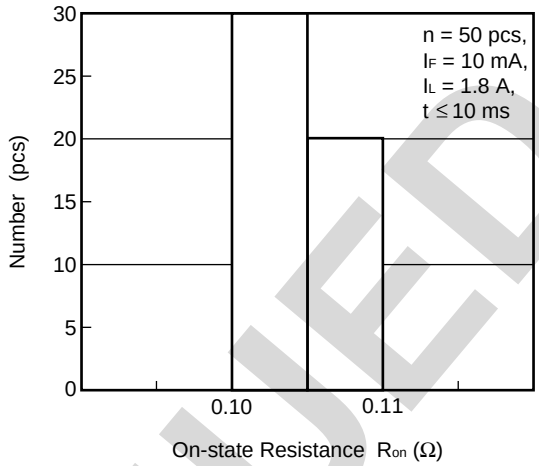

TURN-ON TIME vs. FORWARD CURRENT

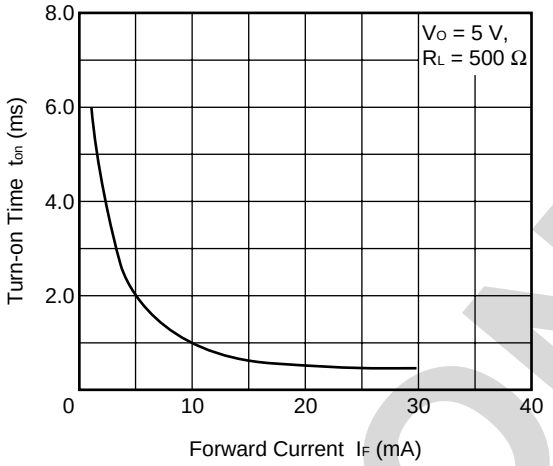

TURN-OFF TIME vs. FORWARD CURRENT

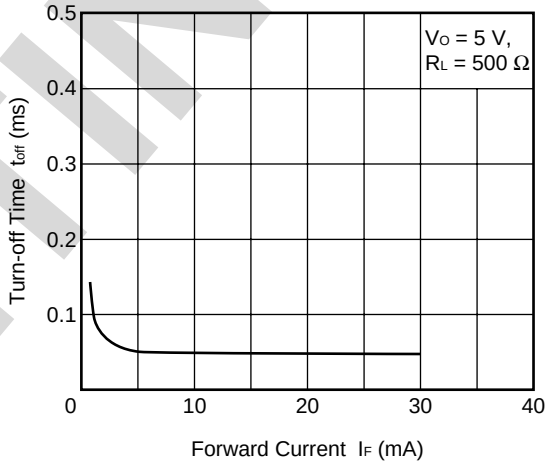

TURN-ON TIME DISTRIBUTION

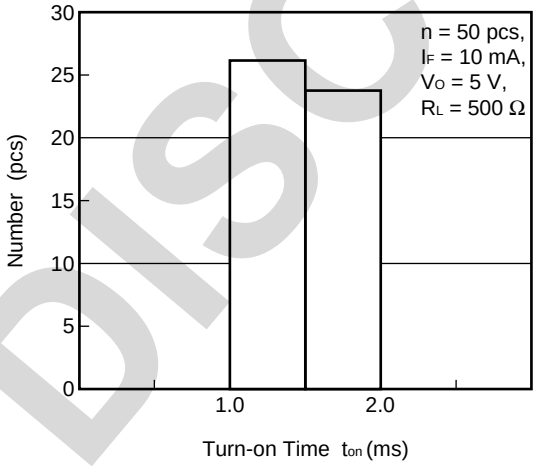

TURN-OFF TIME DISTRIBUTION

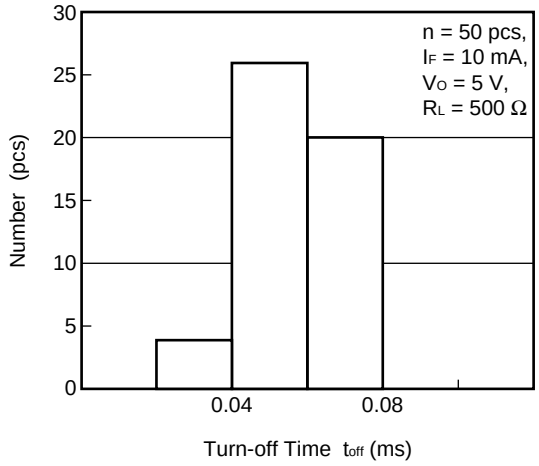

DISCONTINUED

NORMALIZED TURN-ON TIME vs.
AMBIENT TEMPERATURE

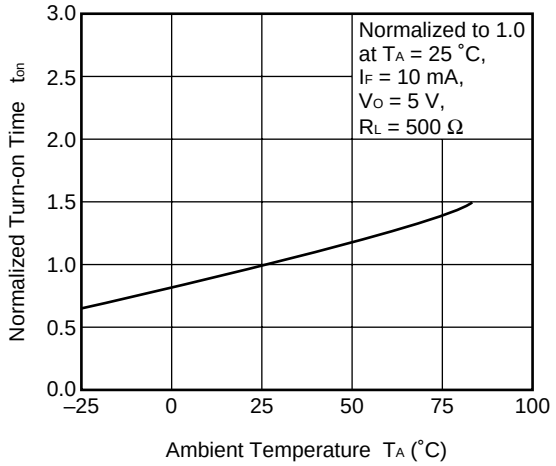

NORMALIZED TURN-OFF TIME vs.
AMBIENT TEMPERATURE

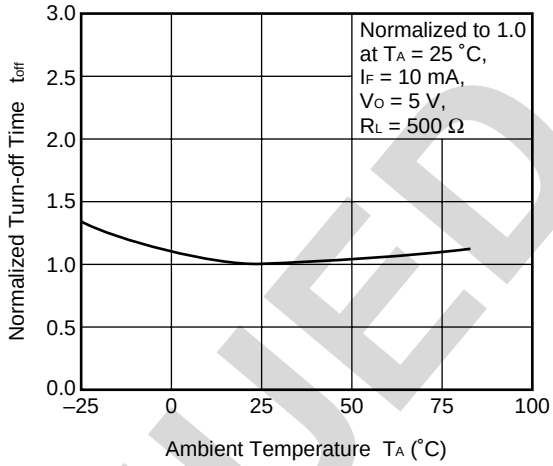

Remark The graphs indicate nominal characteristics.

DISCONTINUED

★ **TAPING SPECIFICATIONS (in millimeters)**

Outline and Dimensions (Tape)

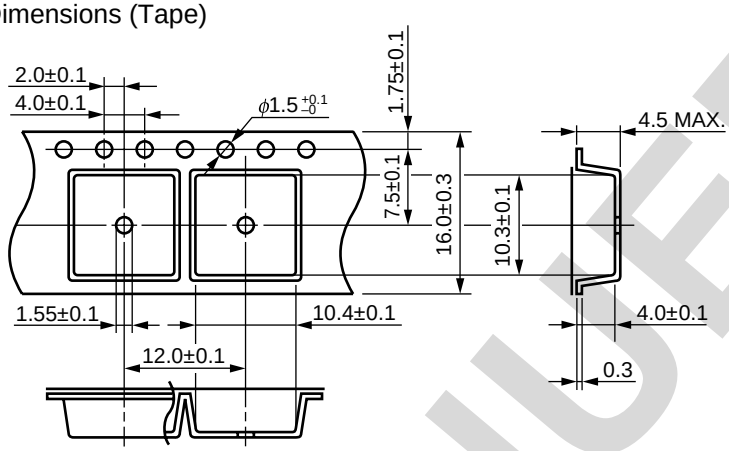

Tape Direction

PS710AL-1A-E3 PS710AL-1A-E4

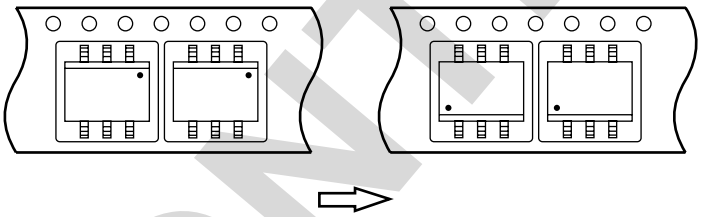

Outline and Dimensions (Reel)

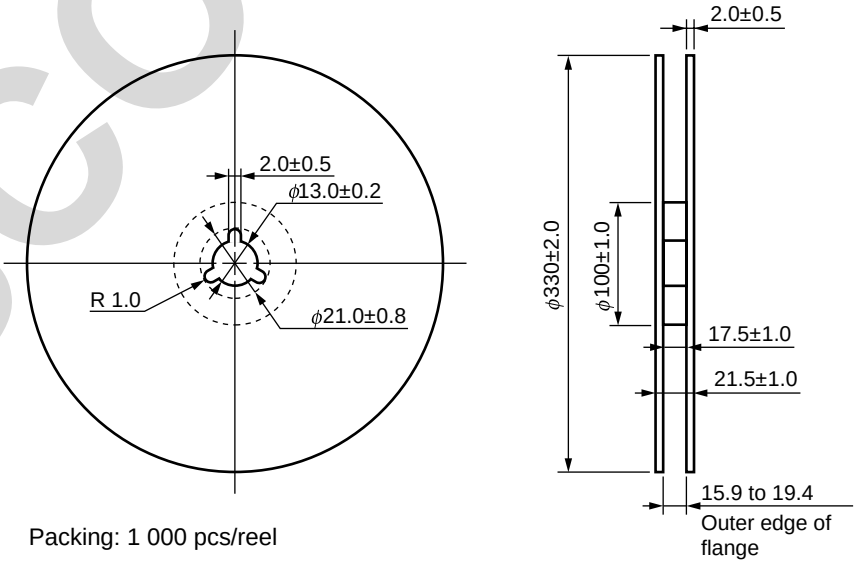

Packing: 1 000 pcs/reel

DISCONTINUED

★ RECOMMENDED SOLDERING CONDITIONS

(1) Infrared reflow soldering

- Peak reflow temperature — 260°C or below (package surface temperature)
- Time of peak reflow temperature — 10 seconds or less
- Time of temperature higher than 220°C — 60 seconds or less
- Time to preheat temperature from 120 to 180°C — 120±30 s
- Number of reflows — Three
- Flux — Rosin flux containing small amount of chlorine (The flux with a maximum chlorine content of 0.2 Wt% is recommended.)

Recommended Temperature Profile of Infrared Reflow

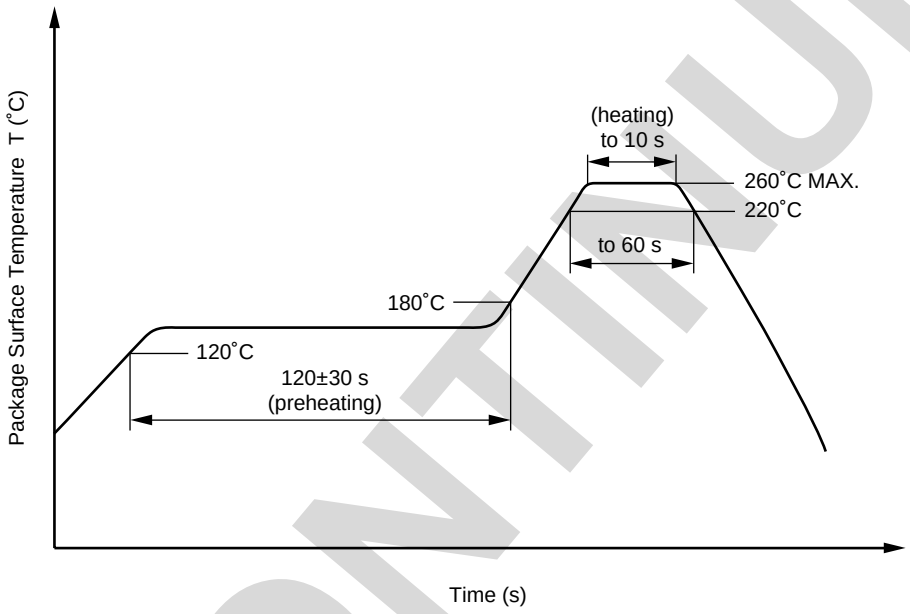

(2) Wave soldering

- Temperature — 260°C or below (molten solder temperature)
- Time — 10 seconds or less
- Preheating conditions — 120°C or below (package surface temperature)
- Number of times — One
- Flux — Rosin flux containing small amount of chlorine (The flux with a maximum chlorine content of 0.2 Wt% is recommended.)

(3) Cautions

- Fluxes

  Avoid removing the residual flux with freon-based and chlorine-based cleaning solvent.

DISCONTINUED

CEL California Eastern Laboratories

4590 Patrick Henry Drive
Santa Clara, CA 95054-1817
Telephone: (408) 919-2500
Facsimile: (408) 988-0279

DISCONTINUED

Subject: Compliance with EU Directives

CEL certifies, to its knowledge, that semiconductor and laser products detailed below are compliant with the requirements of European Union (EU) Directive 2002/95/EC Restriction on Use of Hazardous Substances in electrical and electronic equipment (RoHS) and the requirements of EU Directive 2003/11/EC Restriction on Penta and Octa BDE.

CEL Pb-free products have the same base part number with a suffix added. The suffix –A indicates that the device is Pb-free. The –AZ suffix is used to designate devices containing Pb which are exempted from the requirement of RoHS directive (*). In all cases the devices have Pb-free terminals. All devices with these suffixes meet the requirements of the RoHS directive.

This status is based on CEL's understanding of the EU Directives and knowledge of the materials that go into its products as of the date of disclosure of this information.

Restricted Substance per RoHS	Concentration Limit per RoHS (values are not yet fixed)	Concentration contained in CEL devices	
		-A	-AZ
Lead (Pb)	< 1000 PPM	Not Detected	(*)
Mercury	< 1000 PPM	Not Detected	
Cadmium	< 100 PPM	Not Detected	
Hexavalent Chromium	< 1000 PPM	Not Detected	
PBB	< 1000 PPM	Not Detected	
PBDE	< 1000 PPM	Not Detected	

If you should have any additional questions regarding our devices and compliance to environmental standards, please do not hesitate to contact your local representative.

Important Information and Disclaimer: Information provided by CEL on its website or in other communications concerting the substance content of its products represents knowledge and belief as of the date that it is provided. CEL bases its knowledge and belief on information provided by third parties and makes no representation or warranty as to the accuracy of such information. Efforts are underway to better integrate information from third parties. CEL has taken and continues to take reasonable steps to provide representative and accurate information but may not have conducted destructive testing or chemical analysis on incoming materials and chemicals. CEL and CEL suppliers consider certain information to be proprietary, and thus CAS numbers and other limited information may not be available for release.
In no event shall CEL's liability arising out of such information exceed the total purchase price of the CEL part(s) at issue sold by CEL to customer on an annual basis.
See CEL Terms and Conditions for additional clarification of warranties and liability.

Looking for pricing, stock, or lifecycle information?

Click below to explore more details on WIN SOURCE:

- View PS710AL-1A on WIN SOURCE
- CEL Information

Optimize Your Supply Chain with WIN SOURCE Solutions

- Global Sourcing Solution
- Obsolete Management
- Cost Control Management
- Shortage Management
- Alternative Solution
- Excess Inventory Management