THE DATASHEET OF

ACST6-7SR

www.win-source.net 0086-755-83957316

ACST6

Overvoltage protected AC switch

Features

- Triac with overvoltage protection
- Low I_{GT} (< 10 mA)
- TO-220FPAB insulated package: 1500 V rms

Benefits

- Enables equipment to meet IEC 61000-4-5
- High off-state reliability with planar technology
- Needs no external overvoltage protection
- Reduces the power passive component count
- High immunity against fast transients described in IEC 61000-4-4 standards

Applications

- AC mains static switching in appliance and industrial control systems
- Drive of medium power AC loads such as:
  - Universal motor of washing machine drum
  - Compressor for fridge or air conditioner

Description

The ACST6 series belongs to the ACS™/ACST power switch family built with A.S.D.® (application specific discrete) technology. This high performance device is suited to home appliances or industrial systems, and drives loads up to 6 A.

This ACST6 switch embeds a Triac structure and a high voltage clamping device able to absorb the inductive turn-off energy and withstand line transients such as those described in the IEC 61000-4-5 standards. The ACST610 needs only low gate current to be activated (I_{GT} < 10 mA) and still shows a high noise immunity complying with IEC standards such as IEC 61000-4-4 (fast transient burst test).

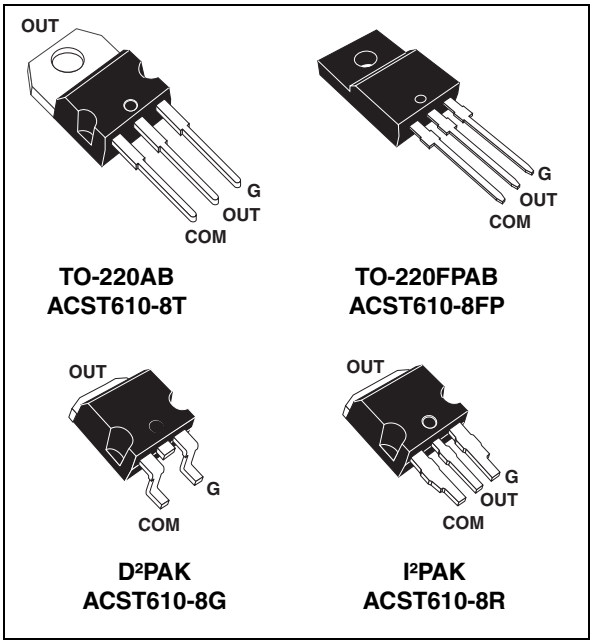

Figure 1. Functional diagram

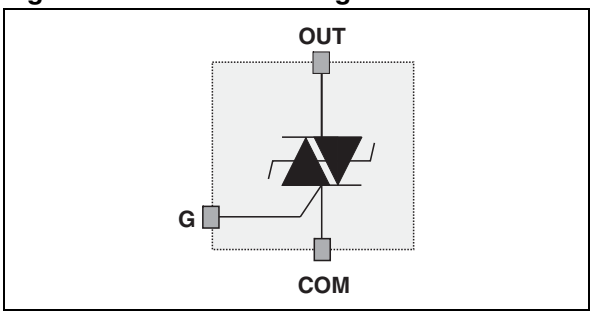

Table 1. Device summary

Symbol	Value	Unit
$I_{T(RMS)}$	6	A
V_{DRM}/V_{RRM}	800	V
I_{GT}	10	mA

TM: ACS is a trademark of STMicroelectronics.
®: A.S.D. is a registered trademark of STMicroelectronics

1 Characteristics

Table 2. Absolute ratings (limiting values)

Symbol	Parameter			Value	Unit
$I_{T(RMS)}$	On-state rms current (full sine wave)	TO-220FPAB	T_c = 92 °C	6	A
		TO-220AB/ D^2PAK / I^2PAK	T_c = 106 °C		
		D^2PAK with 1 cm^2 copper	T_{amb} = 62 °C	1.5	
I_{TSM}	Non repetitive surge peak on-state current T_j initial = 25 °C, (full cycle sine wave)	F = 60 Hz	t_p = 16.7 ms	47	A
		F = 50 Hz	t_p = 20 ms	45	A
I^2t	I^2t for fuse selection		t_p = 10 ms	13	A^2s
dI/dt	Critical rate of rise on-state current $I_G = 2 \times I_{GT}$, ($t_r \leq 100$ ns)	F = 120 Hz	T_j = 125 °C	100	A/µs
V_{PP}	Non repetitive line peak pulse voltage (1)		T_j = 25 °C	2	kV
$P_{G(AV)}$	Average gate power dissipation		T_j = 125 °C	0.1	W
P_{GM}	Peak gate power dissipation (t_p = 20 µs)		T_j = 125 °C	10	W
I_{GM}	Peak gate current (t_p = 20 µs)		T_j = 125 °C	1.6	A
T_{stg}	Storage temperature range			-40 to +150	°C
T_j	Operating junction temperature range			-40 to +125	°C
T_l	Maximum lead solder temperature during 10 ms (at 3 mm from plastic case)			260	°C
$V_{INS(RMS)}$	Insulation rms voltage	TO-220FPAB		1500	V

1. According to test described in IEC 61000-4-5 standard and *Figure 19.*

Table 3. Electrical characteristics

Symbol	Test conditions	Quadrant	T_j		Value	Unit
I_{GT}(1)	V_{OUT} = 12 V, R_L = 33 Ω	I - II - III	25 °C	MAX.	10	mA
V_{GT}	V_{OUT} = 12 V, R_L = 33 Ω	I - II - III	25 °C	MAX.	1.0	V
V_{GD}	$V_{OUT} = V_{DRM}$, R_L = 3.3 kΩ	I - II - III	125 °C	MIN.	0.2	V
I_H(2)	I_{OUT} = 500 mA		25 °C	MAX.	25	mA
I_L	$I_G = 1.2 \times I_{GT}$	I - III	25 °C	MAX.	30	mA
I_L	$I_G = 1.2 \times I_{GT}$	II	25 °C	MAX.	40	mA
dV/dt(2)	V_{OUT} = 67 % V_{DRM}, gate open		125 °C	MIN.	500	V/µs
$(dI/dt)_c$(2)	$(dV/dt)_c$ = 15 V/µs		125 °C	MIN.	3.5	A/ms
V_{CL}	I_{CL} = 0.1 mA, t_p = 1 ms		25 °C	MIN.	850	V

1. Minimum I_{GT} is guaranteed at 5% of I_{GT} max
2. For both polarities of OUT pin referenced to COM pin

Table 4. Static characteristics

Symbol	Test conditions			Value	Unit
V_{TM}(1)	I_{OUT} = 2.1 A, t_p = 500 µs	T_j = 25 °C	MAX.	1.4	V
	I_{OUT} = 8.5 A, t_p = 500 µs			1.7	
V_{T0}(1)	Threshold voltage	T_j = 125 °C	MAX.	0.9	V
R_d(1)	Dynamic resistance	T_j = 125 °C	MAX.	80	mΩ
I_{DRM} I_{RRM}	V_{OUT} = V_{DRM}/ V_{RRM}	T_j = 25 °C	MAX.	20	µA
		T_j = 125 °C	MAX.	500	µA

1. For both polarities of OUT pin referenced to COM pin

Table 5. Thermal resistances

Symbol	Parameter		Value	Unit
$Rt_{h(j-a)}$	Junction to ambient	TO-220AB TO-220FPAB	60	°C/W
		I^2PAK	65	
	Junction to ambient (soldered on 1 cm^2 copper pad)	D^2PAK	45	
$R_{th(j-c)}$	Junction to case for full cycle sine wave conduction	TO-220FPAB	4.25	°C/W
		TO-220AB D^2PAK , I^2PAK	2.5	

Figure 2. Maximum power dissipation versus rms on-state current

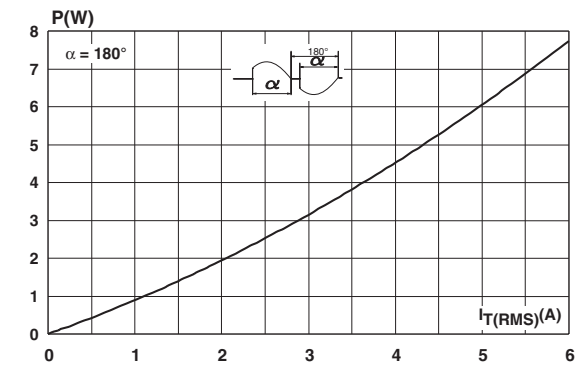

Figure 3. On-state rms current versus case temperature (full cycle)

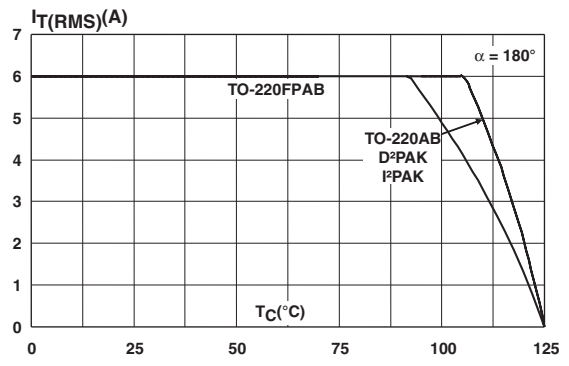

Figure 4. On-state rms current versus ambient temperature (free air convection, full cycle)

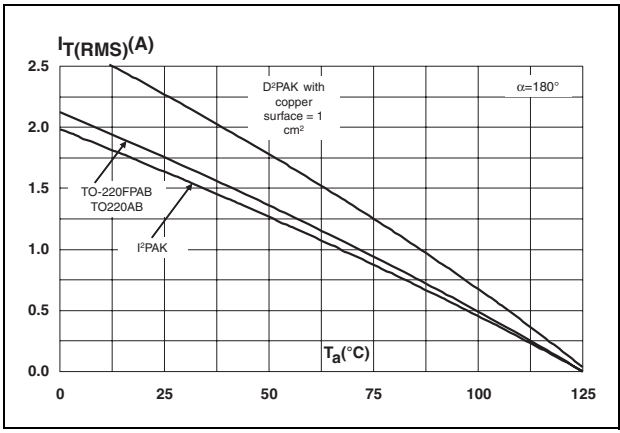

Figure 5. Relative variation of thermal impedance versus pulse duration

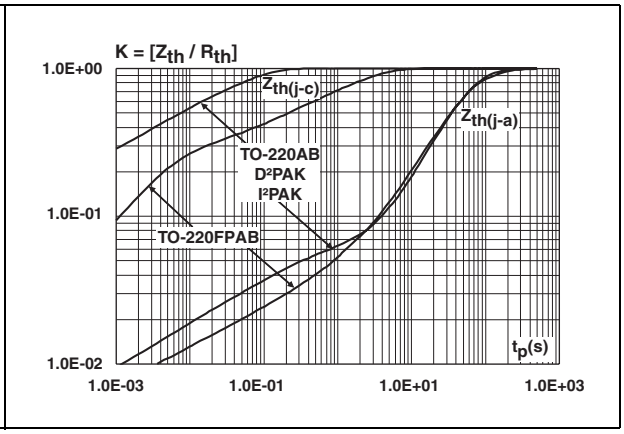

Figure 6. Relative variation of gate trigger current (I_{GT}) and voltage (V_{GT}) versus junction temperature

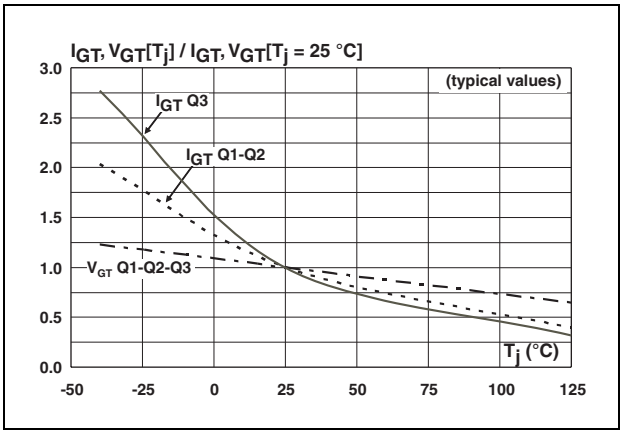

Figure 7. Relative variation of holding current (I_H) and latching current (I_L) versus junction temperature

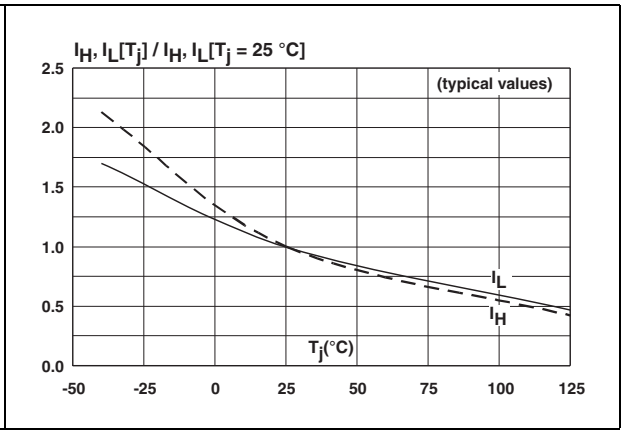

Figure 8. Surge peak on-state current versus number of cycles

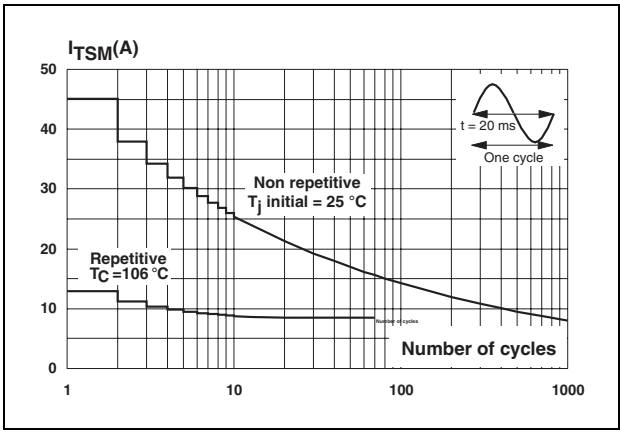

Figure 9. Non repetitive surge peak on-state current and corresponding value of I^2t versus sinusoidal pulse width

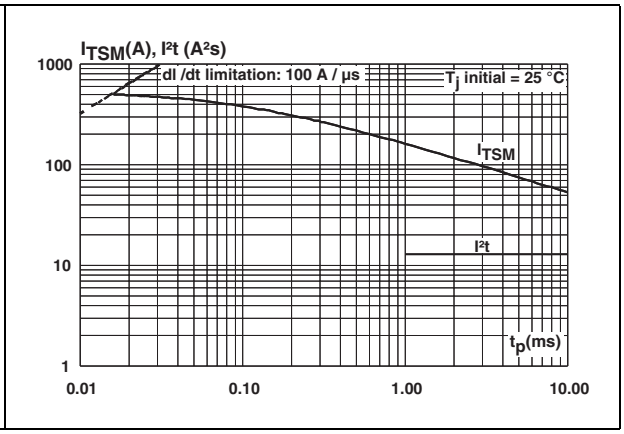

Figure 10. On-state characteristics (maximum values)

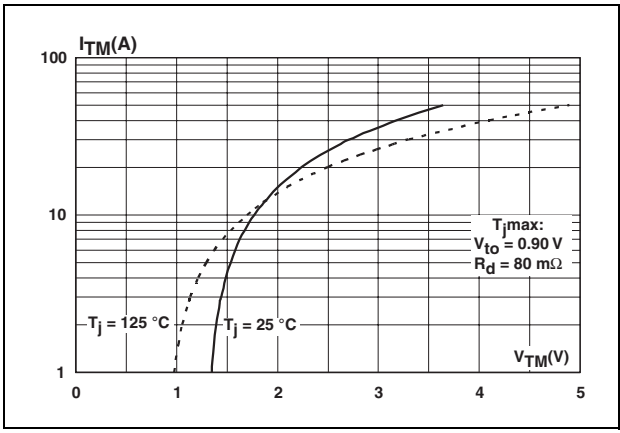

Figure 11. Relative variation of critical rate of decrease of main current $(dI/dt)_c$ versus junction temperature

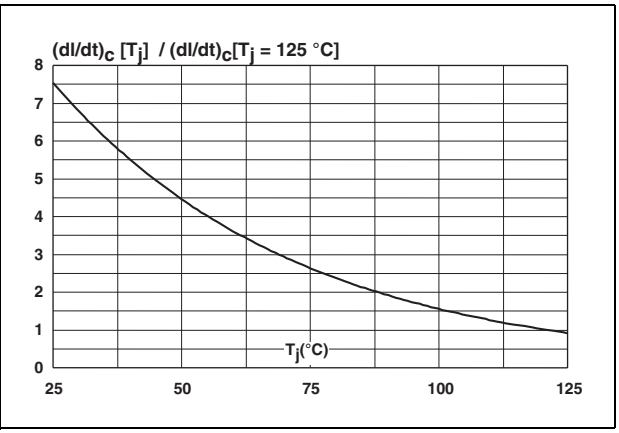

Figure 12. Relative variation of static dV/dt immunity versus junction temperature (gate open)

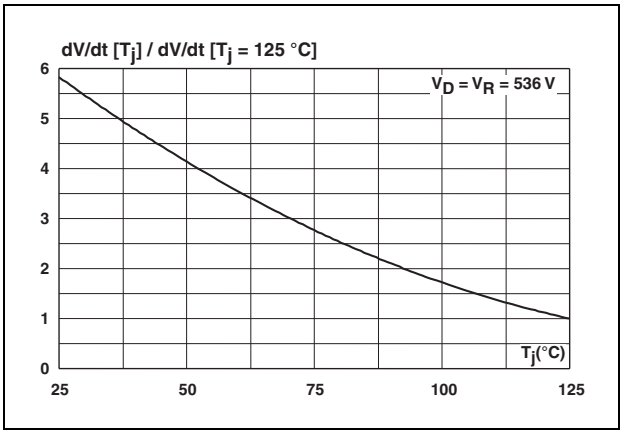

Figure 13. Relative variation of leakage current versus junction temperature

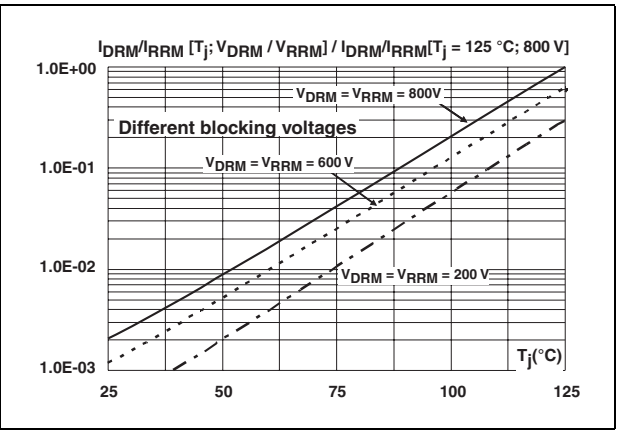

Figure 14. Relative variation of clamping voltage (V_{CL}) versus junction temperature (minimum values)

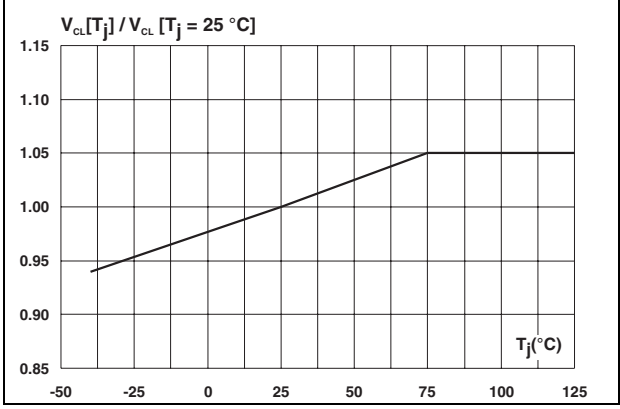

Figure 15. Thermal resistance junction to ambient versus copper surface under tab

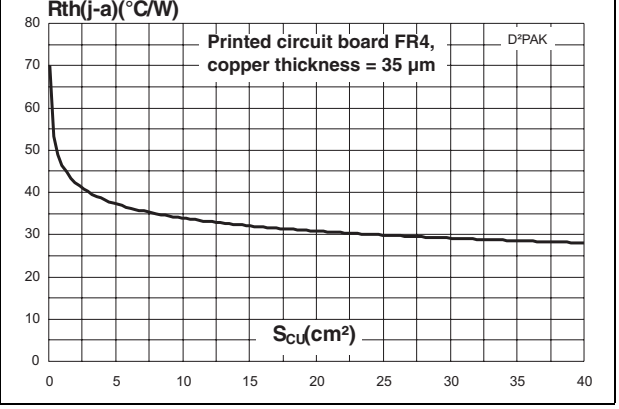

2 Application information

2.1 Typical application description

The ACST6 device has been designed to control medium power load, such as AC motors in home appliances. Thanks to its thermal and turn off commutation performances, the ACST6 switch is able to drive an inductive load up to 6 A with no turn off additional snubber. It also provides high thermal performances in static and transient modes such as the compressor inrush current or high torque operating conditions of an AC motor. Thanks to its low gate triggering current level, the ACST6 can be driven directly by an MCU through a simple gate resistor as shown *Figure 16* and *Figure 17*.

Figure 16. Compressor control – typical diagram

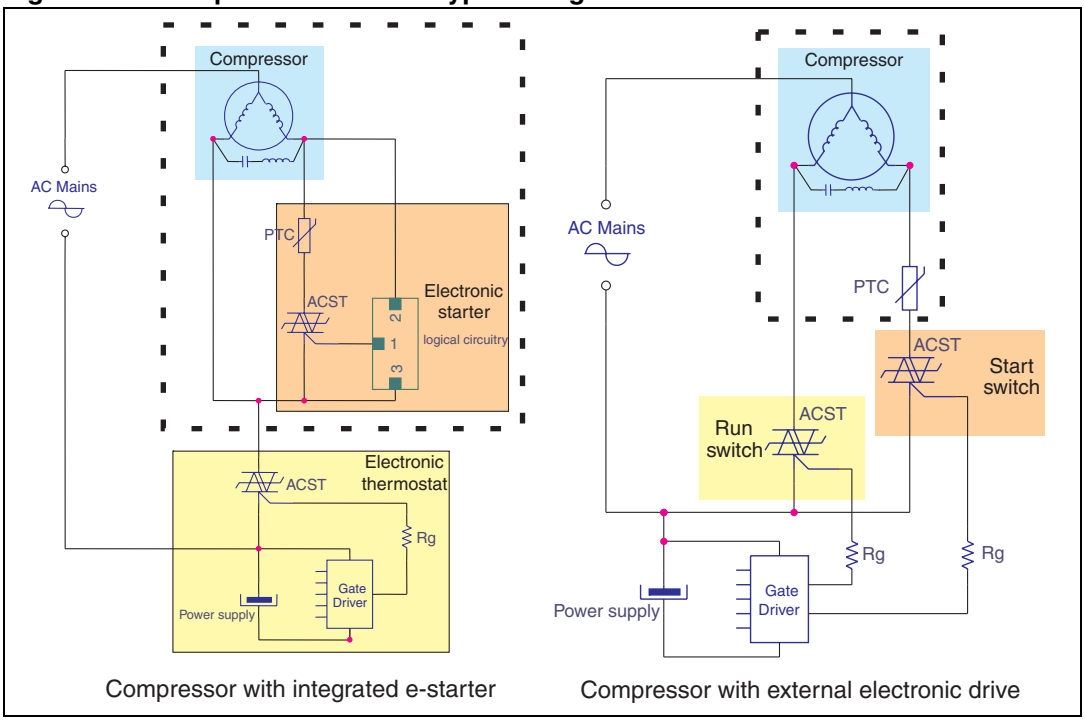

Figure 17. Universal drum motor control – typical diagram

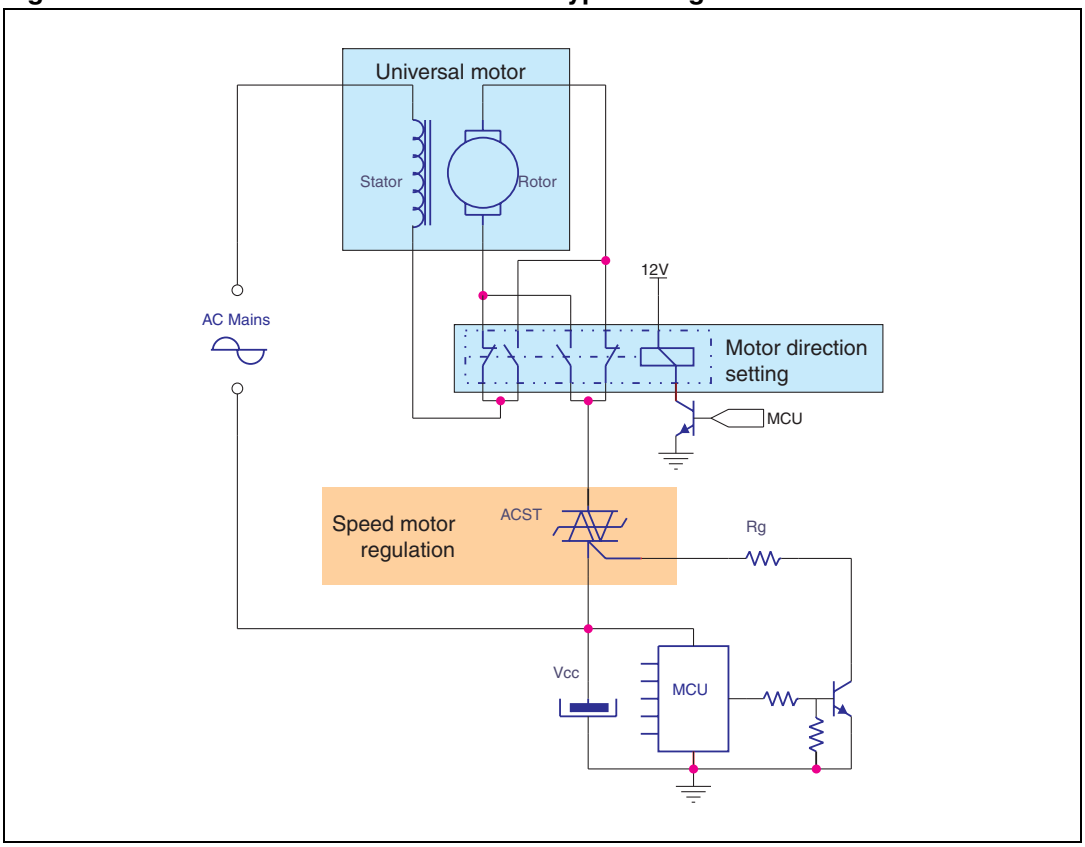

2.2 AC line transient voltage ruggedness

In comparison with standard Triacs, which are not robust against surge voltage, the ACST6 is self-protected against over-voltage, specified by the new parameter V_{CL}. The ACST6 switch can safely withstand AC line transient voltages either by clamping the low energy spikes, such as inductive spikes at switch off, or by switching to the on state (for less than 10 ms) to dissipate higher energy shocks through the load. This safety feature works even with high turn-on current ramp up.

The test circuit of *Figure 18* represents the ACST6 application, and is used to stress the ACST switch according to the IEC 61000-4-5 standard conditions. With the additional effect of the load which is limiting the current, the ACST switch withstands the voltage spikes up to 2 kV on top of the peak line voltage. The protection is based on an overvoltage crowbar technology. The ACST6 folds back safely to the on state as shown in *Figure 19*. The ACST6 recovers its blocking voltage capability after the surge and the next zero current crossing. Such a non repetitive test can be done at least 10 times on each AC line voltage polarity.

Figure 18. Overvoltage ruggedness test circuit for resistive and inductive loads for IEC 61000-4-5 standards

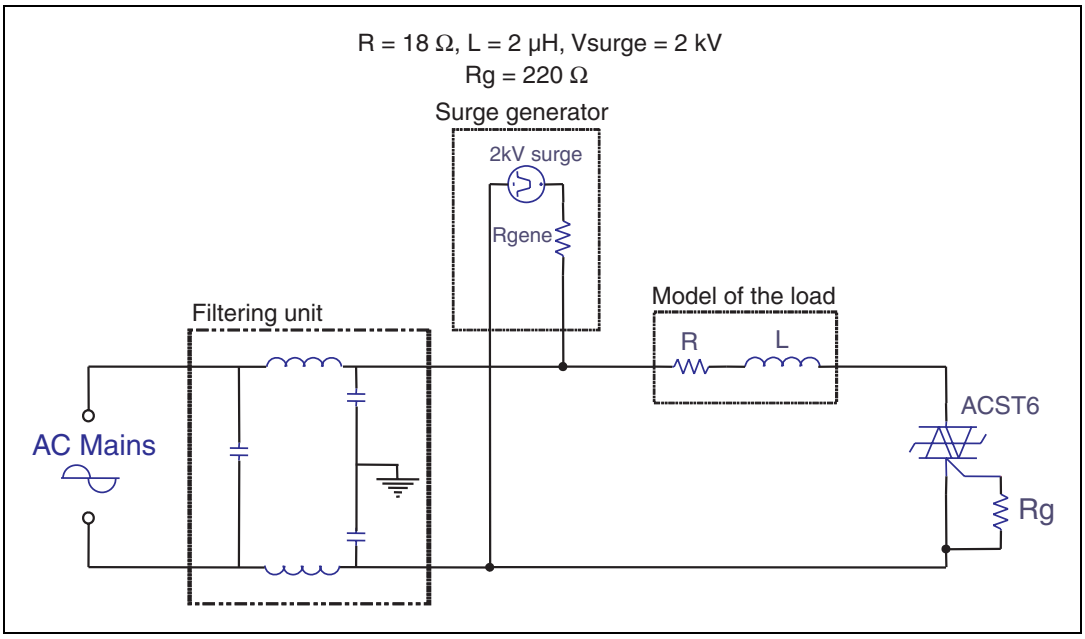

Figure 19. Typical current and voltage waveforms across the ACST6 during IEC 61000-4-5 standard test

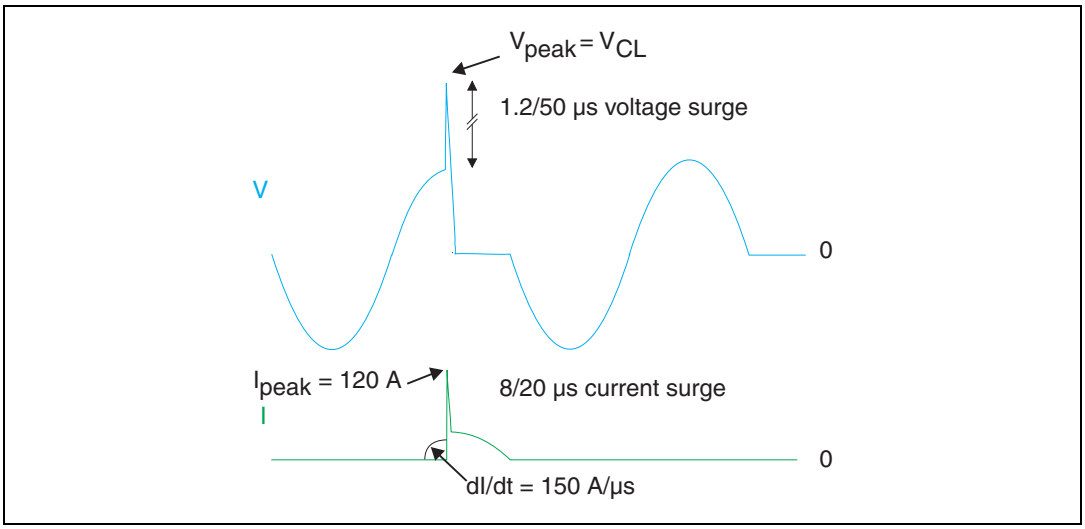

3 Ordering information scheme

Figure 20. Ordering information scheme

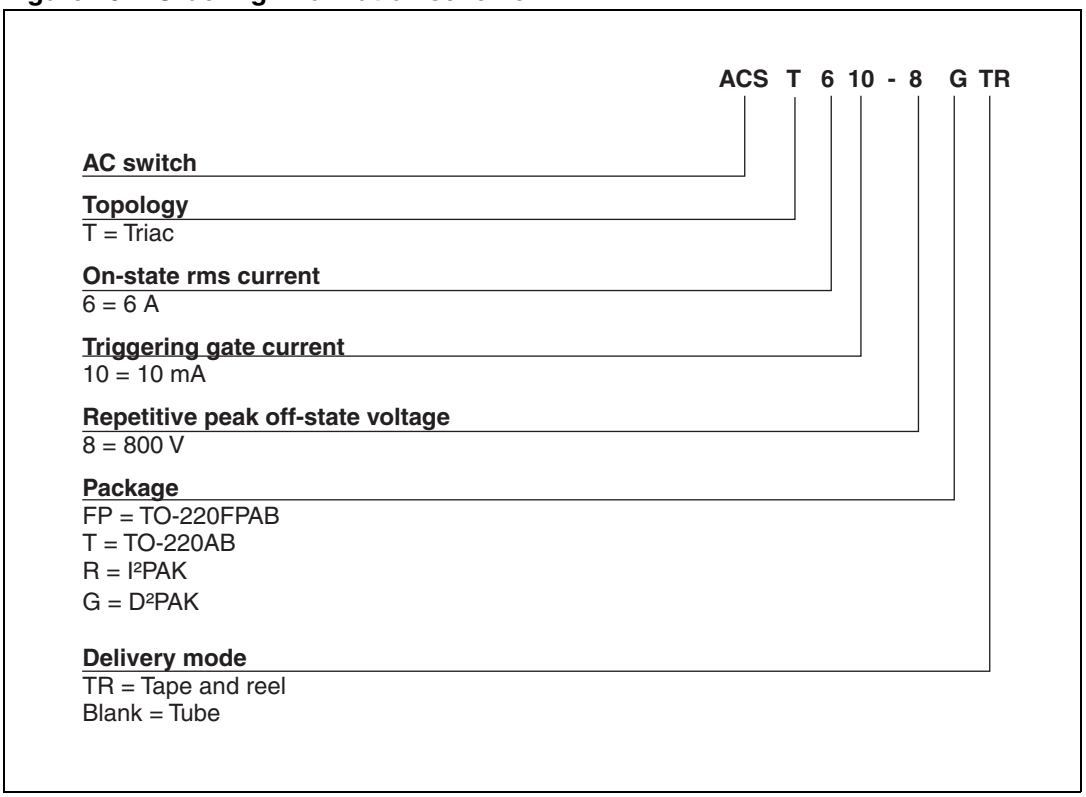

4 Package information

- Epoxy meets UL94, V0
- Cooling method: by conduction (C)
- Recommended torque value (TO220AB, TO220FPAB): 0.4 to 0.6 N·m

In order to meet environmental requirements, ST offers these devices in different grades of ECOPACK® packages, depending on their level of environmental compliance. ECOPACK® specifications, grade definitions and product status are available at: www.st.com. ECOPACK® is an ST trademark.

Table 6. TO-220AB dimensions

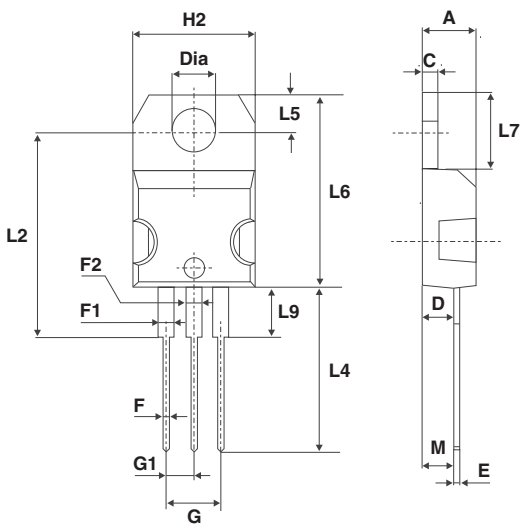

Ref.	Dimensions			
	Millimeters		Inches	
	Min.	Max.	Min.	Max.
A	4.40	4.60	0.173	0.181
C	1.23	1.32	0.048	0.051
D	2.40	2.72	0.094	0.107
E	0.49	0.70	0.019	0.027
F	0.61	0.88	0.024	0.034
F1	1.14	1.70	0.044	0.066
F2	1.14	1.70	0.044	0.066
G	4.95	5.15	0.194	0.202
G1	2.40	2.70	0.094	0.106
H2	10	10.40	0.393	0.409
L2	16.4 typ.		0.645 typ.	
L4	13	14	0.511	0.551
L5	2.65	2.95	0.104	0.116
L6	15.25	15.75	0.600	0.620
L7	6.20	6.60	0.244	0.259
L9	3.50	3.93	0.137	0.154
M	2.6 typ.		0.102 typ.	
Diam.	3.75	3.85	0.147	0.151

Table 7. TO-220FPAB dimensions

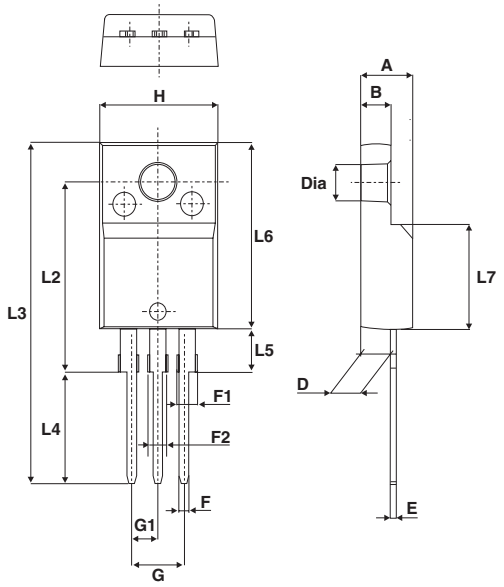

Ref.	Dimensions			
	Millimeters		Inches	
	Min.	Max.	Min.	Max.
A	4.4	4.6	0.173	0.181
B	2.5	2.7	0.098	0.106
D	2.5	2.75	0.098	0.108
E	0.45	0.70	0.018	0.027
F	0.75	1	0.030	0.039
F1	1.15	1.70	0.045	0.067
F2	1.15	1.70	0.045	0.067
G	4.95	5.20	0.195	0.205
G1	2.4	2.7	0.094	0.106
H	10	10.4	0.393	0.409
L2	16 Typ.		0.63 Typ.	
L3	28.6	30.6	1.126	1.205
L4	9.8	10.6	0.386	0.417
L5	2.9	3.6	0.114	0.142
L6	15.9	16.4	0.626	0.646
L7	9.00	9.30	0.354	0.366
Dia.	3.00	3.20	0.118	0.126

Table 8. D²PAK dimensions

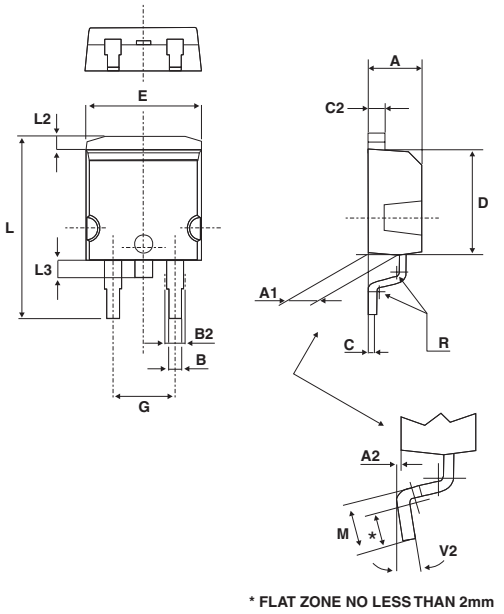

Ref.	Dimensions			
	Millimeters		Inches	
	Min.	Max.	Min.	Max.
A	4.40	4.60	0.173	0.181
A1	2.49	2.69	0.098	0.106
A2	0.03	0.23	0.001	0.009
B	0.70	0.93	0.027	0.037
B2	1.14	1.70	0.045	0.067
C	0.45	0.60	0.017	0.024
C2	1.23	1.36	0.048	0.054
D	8.95	9.35	0.352	0.368
E	10.00	10.40	0.393	0.409
G	4.88	5.28	0.192	0.208
L	15.00	15.85	0.590	0.624
L2	1.27	1.40	0.050	0.055
L3	1.40	1.75	0.055	0.069
M	2.40	3.20	0.094	0.126
R	0.40 typ.		0.016 typ.	
V2	0°	8°	0°	8°

Figure 21. Footprint (dimensions in mm)

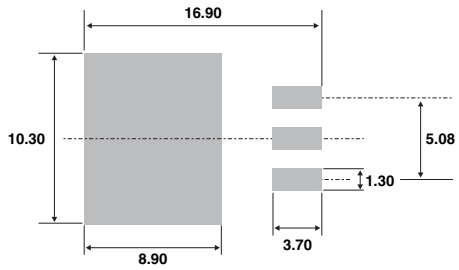

Table 9. I^2PAK double track dimensions

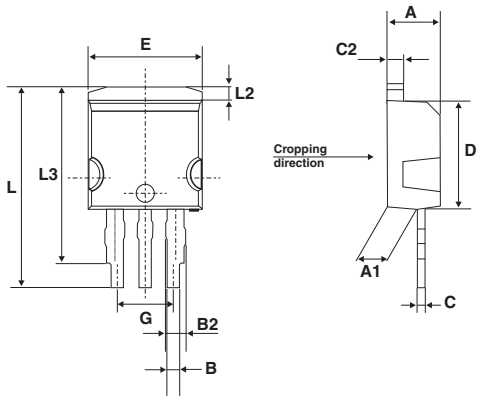

Ref.	Dimensions			
	Millimeters		Inches	
	Min.	Max.	Min.	Max.
A	4.40	4.60	0.173	0.181
A1	2.49	2.69	0.098	0.106
B	0.70	0.93	0.027	0.037
B2	1.14	1.70	0.045	0.067
C	0.45	0.60	0.018	0.024
C2	1.23	1.36	0.048	0.053
D	8.95	9.35	0.352	0.368
E	10	10.40	0.394	0.409
G	4.88	5.28	0.192	0.208
L	16.70	17.5	0.657	0.689
L2	1.27	1.40	0.050	0.055
L3	13.82	14.42	0.544	0.568

5 Ordering information

Table 10. Ordering information

Order code	Marking	Package	Weight	Base Qty	Packing mode
ACST610-8FP	ACST6108	TO-220FPAB	2.4 g	50	Tube
ACST610-8G		D^2PAK	1.5 g	50	Tube
ACST610-8GTR		D^2PAK	1.5 g	1000	Tape and reel
ACST610-8R		I^2PAK	2.3 g	50	Tube
ACST610-8T		TO-220AB	1.5 g	50	Tube

6 Revision history

Table 11. Document revision history

Date	Revision	Changes
Jan-2002	7F	Previous issue.
09-May-2005	8	Layout update. No content change.
18-Dec-2009	9	Document structure and parameter presentation revised for consistency with other ACST documents. No technical changes. Order codes updated.
01-Jul-2010	10	Updated *Figure 20.*

Please Read Carefully:

Information in this document is provided solely in connection with ST products. STMicroelectronics NV and its subsidiaries (“ST”) reserve the right to make changes, corrections, modifications or improvements, to this document, and the products and services described herein at any time, without notice.

All ST products are sold pursuant to ST’s terms and conditions of sale.

Purchasers are solely responsible for the choice, selection and use of the ST products and services described herein, and ST assumes no liability whatsoever relating to the choice, selection or use of the ST products and services described herein.

No license, express or implied, by estoppel or otherwise, to any intellectual property rights is granted under this document. If any part of this document refers to any third party products or services it shall not be deemed a license grant by ST for the use of such third party products or services, or any intellectual property contained therein or considered as a warranty covering the use in any manner whatsoever of such third party products or services or any intellectual property contained therein.

UNLESS OTHERWISE SET FORTH IN ST’S TERMS AND CONDITIONS OF SALE ST DISCLAIMS ANY EXPRESS OR IMPLIED WARRANTY WITH RESPECT TO THE USE AND/OR SALE OF ST PRODUCTS INCLUDING WITHOUT LIMITATION IMPLIED WARRANTIES OF MERCHANTABILITY, FITNESS FOR A PARTICULAR PURPOSE (AND THEIR EQUIVALENTS UNDER THE LAWS OF ANY JURISDICTION), OR INFRINGEMENT OF ANY PATENT, COPYRIGHT OR OTHER INTELLECTUAL PROPERTY RIGHT.

UNLESS EXPRESSLY APPROVED IN WRITING BY AN AUTHORIZED ST REPRESENTATIVE, ST PRODUCTS ARE NOT RECOMMENDED, AUTHORIZED OR WARRANTED FOR USE IN MILITARY, AIR CRAFT, SPACE, LIFE SAVING, OR LIFE SUSTAINING APPLICATIONS, NOR IN PRODUCTS OR SYSTEMS WHERE FAILURE OR MALFUNCTION MAY RESULT IN PERSONAL INJURY, DEATH, OR SEVERE PROPERTY OR ENVIRONMENTAL DAMAGE. ST PRODUCTS WHICH ARE NOT SPECIFIED AS "AUTOMOTIVE GRADE" MAY ONLY BE USED IN AUTOMOTIVE APPLICATIONS AT USER’S OWN RISK.

Resale of ST products with provisions different from the statements and/or technical features set forth in this document shall immediately void any warranty granted by ST for the ST product or service described herein and shall not create or extend in any manner whatsoever, any liability of ST.

ST and the ST logo are trademarks or registered trademarks of ST in various countries.

Information in this document supersedes and replaces all information previously supplied.

The ST logo is a registered trademark of STMicroelectronics. All other names are the property of their respective owners.

© 2010 STMicroelectronics - All rights reserved

STMicroelectronics group of companies

Australia - Belgium - Brazil - Canada - China - Czech Republic - Finland - France - Germany - Hong Kong - India - Israel - Italy - Japan - Malaysia - Malta - Morocco - Philippines - Singapore - Spain - Sweden - Switzerland - United Kingdom - United States of America

www.st.com

Looking for pricing, stock, or lifecycle information?

Click below to explore more details on WIN SOURCE:

- View ACST6-7SR on WIN SOURCE
- STMicroelectronics Information

Optimize Your Supply Chain with WIN SOURCE Solutions

- Global Sourcing Solution
- Obsolete Management
- Cost Control Management
- Shortage Management
- Alternative Solution
- Excess Inventory Management