THE DATASHEET OF

SZNUD3160DMT1G

www.win-source.net 0086-755-83957316

NUD3160, SZNUD3160

Industrial Inductive Load Driver

This micro−integrated part provides a single component solution to switch inductive loads such as relays, solenoids, and small DC motors without the need of a free−wheeling diode. It accepts logic level inputs, thus allowing it to be driven by a large variety of devices including logic gates, inverters, and microcontrollers.

Features

- Provides Robust Interface between D.C. Relay Coils and Sensitive Logic
- Capable of Driving Relay Coils Rated up to 150 mA at 12 V, 24 V or 48 V
- Replaces 3 or 4 Discrete Components for Lower Cost
- Internal Zener Eliminates Need for Free−Wheeling Diode
- Meets Load Dump and other Automotive Specs
- SZ Prefix for Automotive and Other Applications Requiring Unique Site and Control Change Requirements; AEC−Q101 Qualified and PPAP Capable
- These are Pb−Free Devices

Typical Applications

- Automotive and Industrial Environment
- Drives Window, Latch, Door, and Antenna Relays

Benefits

- Reduced PCB Space
- Standardized Driver for Wide Range of Relays
- Simplifies Circuit Design and PCB Layout
- Compliance with Automotive Specifications

ON Semiconductor®

www.onsemi.com

MARKING DIAGRAMS

SOT−23
CASE 318
STYLE 21

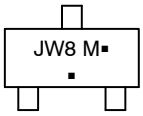

JW8 = Specific Device Code
M = Date Code
▪ = Pb−Free Package
(Note: Microdot may be in either location)

SC−74
CASE 318F
STYLE 7

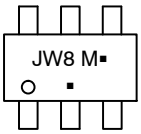

JW8 = Specific Device Code
M = Date Code
▪ = Pb−Free Package
(Note: Microdot may be in either location)

ORDERING INFORMATION

Device	Package	Shipping†
NUD3160LT1G	SOT−23 (Pb−Free)	3000 / Tape & Reel
SZNUD3160LT1G	SOT−23 (Pb−Free)	3000 / Tape & Reel
NUD3160DMT1G	SC−74 (Pb−Free)	3000 / Tape & Reel
SZNUD3160DMT1G	SC−74 (Pb−Free)	3000 / Tape & Reel

†For information on tape and reel specifications, including part orientation and tape sizes, please refer to our Tape and Reel Packaging Specification Brochure, BRD8011/D.

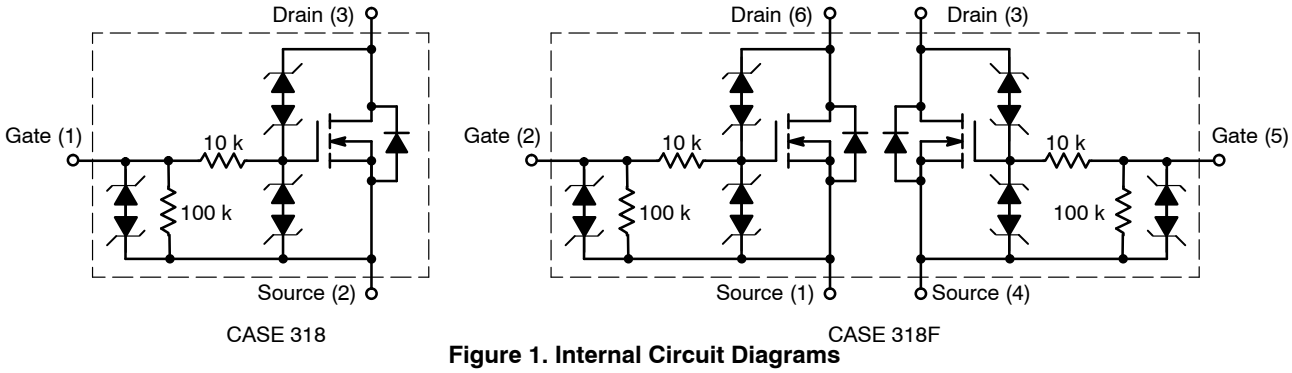

Figure 1. Internal Circuit Diagrams

© Semiconductor Components Industries, LLC, 2003

MAXIMUM RATINGS (T_J = 25°C unless otherwise specified)

Symbol	Rating	Value	Unit
V_{DSS}	Drain−to−Source Voltage – Continuous (T_J = 125°C)	60	V
V_{GSS}	Gate−to−Source Voltage – Continuous (T_J = 125°C)	12	V
I_D	Drain Current – Continuous (T_J = 125°C) Minimum copper, double sided board, T_A = 80°C SOT−23 SC74 Single device driven SC74 Both devices driven 1 in^2 copper, double sided board, T_A = 25°C SOT−23 SC74 Single device driven SC74 Both devices driven	 158 157 132 ea 272 263 230 ea	mA
E_Z	Single Pulse Drain−to−Source Avalanche Energy (For Relay's Coils/Inductive Loads of 80 Ω or Higher) (T_J Initial = 85°C)	200	mJ
P_{PK}	Peak Power Dissipation, Drain−to−Source (Notes 1 and 2) (T_J Initial = 85°C)	20	W
E_{LD1}	Load Dump Pulse, Drain−to−Source (Note 3) R_{SOURCE} = 0.5 Ω, T = 300 ms) (For Relay's Coils/Inductive Loads of 80 Ω or Higher) (T_J Initial = 85°C)	60	V
E_{LD2}	Inductive Switching Transient 1, Drain−to−Source (Waveform: R_{SOURCE} = 10 Ω, T = 2.0 ms) (For Relay's Coils/Inductive Loads of 80 Ω or Higher) (T_J Initial = 85°C)	100	V
E_{LD3}	Inductive Switching Transient 2, Drain−to−Source (Waveform: R_{SOURCE} = 4.0 Ω, T = 50 μs) (For Relay's Coils/Inductive Loads of 80 Ω or Higher) (T_J Initial = 85°C)	300	V
Rev−Bat	Reverse Battery, 10 Minutes (Drain−to−Source) (For Relay's Coils/Inductive Loads of 80 Ω or more)	−14	V
Dual−Volt	Dual Voltage Jump Start, 10 Minutes (Drain−to−Source)	28	V
ESD	Human Body Model (HBM) According to EIA/JESD22/A114 Specification	2000	V

Stresses exceeding those listed in the Maximum Ratings table may damage the device. If any of these limits are exceeded, device functionality should not be assumed, damage may occur and reliability may be affected.

THERMAL CHARACTERISTICS

Symbol	Rating		Value	Unit
T_A	Operating Ambient Temperature		−40 to 125	°C
T_J	Maximum Junction Temperature		150	°C
T_{STG}	Storage Temperature Range		−65 to 150	°C
P_D	Total Power Dissipation (Note 4) Derating above 25°C	SOT−23	225 1.8	mW mW/°C
P_D	Total Power Dissipation (Note 4) Derating above 25°C	SC−74	380 3.0	mW mW/°C
$R_{\theta JA}$	Thermal Resistance, Junction−to−Ambient			°C/W
	Minimum Copper	SOT−23	556	
		SC−74 One Device Powered	556	
		SC−74 Both Devices Equally Powered	398	
	300 mm^2 Copper	SOT−23	395	
		SC−74 One Device Powered	420	
		SC−74 Both Devices Equally Powered	270	

1. Nonrepetitive current square pulse 1.0 ms duration.
2. For different square pulse durations, see Figure 12.
3. Nonrepetitive load dump pulse per Figure 3.
4. Mounted onto minimum pad board.

ELECTRICAL CHARACTERISTICS (T_J = 25°C unless otherwise specified)

Characteristic	Symbol	Min	Typ	Max	Unit
OFF CHARACTERISTICS					
Drain to Source Sustaining Voltage (I_D = 10 mA)	V_{BRDSS}	61	66	70	V
Drain to Source Leakage Current	I_{DSS}				μA
(V_{DS} = 12 V, V_{GS} = 0 V)		–	–	0.5	
(V_{DS} = 12 V, V_{GS} = 0 V, T_J = 125°C)		–	–	1.0	
(V_{DS} = 60 V, V_{GS} = 0 V)		–	–	50	
(V_{DS} = 60 V, V_{GS} = 0 V, T_J = 125°C)		–	–	80	
Gate Body Leakage Current	I_{GSS}				μA
(V_{GS} = 3.0 V, V_{DS} = 0 V)		–	–	60	
(V_{GS} = 3.0 V, V_{DS} = 0 V, T_J = 125°C)		–	–	80	
(V_{GS} = 5.0 V, V_{DS} = 0 V)		–	–	90	
(V_{GS} = 5.0 V, V_{DS} = 0 V, T_J = 125°C)		–	–	110	
ON CHARACTERISTICS					
Gate Threshold Voltage	$V_{GS(th)}$				V
(V_{GS} = V_{DS}, I_D = 1.0 mA)		1.3	1.8	2.0	
(V_{GS} = V_{DS}, I_D = 1.0 mA, T_J = 125°C)		1.3	–	2.0	
Drain to Source On−Resistance	$R_{DS(on)}$				Ω
(I_D = 150 mA, V_{GS} = 3.0 V)		–	–	2.4	
(I_D = 150 mA, V_{GS} = 3.0 V, T_J = 125°C)		–	–	3.7	
(I_D = 150 mA, V_{GS} = 5.0 V)		–	–	1.8	
(I_D = 150 mA, V_{GS} = 5.0 V, T_J = 125°C)		–	–	2.9	
Output Continuous Current	$I_{DS(on)}$				mA
(V_{DS} = 0.3 V, V_{GS} = 5.0 V)		150	200	–	
(V_{DS} = 0.3 V, V_{GS} = 5.0 V, T_J = 125°C)		100	–	–	
Forward Transconductance (V_{DS} = 12 V, I_D = 150 mA)	g_{FS}	–	400	–	mmho
DYNAMIC CHARACTERISTICS					
Input Capacitance (V_{DS} = 12 V, V_{GS} = 0 V, f = 10 kHz)	C_{iss}	–	30	–	pf
Output Capacitance (V_{DS} = 12 V, V_{GS} = 0 V, f = 10 kHz)	C_{oss}	–	14	–	pf
Transfer Capacitance (V_{DS} = 12 V, V_{GS} = 0 V, f = 10 kHz)	C_{rss}	–	6.0	–	pf
SWITCHING CHARACTERISTICS					
Propagation Delay Times:					ns
High to Low Propagation Delay; Figure 2, (V_{DS} = 12 V, V_{GS} = 3.0 V)	t_{PHL}	–	918	–	
Low to High Propagation Delay; Figure 2, (V_{DS} = 12 V, V_{GS} = 3.0 V)	t_{PLH}	–	798	–	
High to Low Propagation Delay; Figure 2, (V_{DS} = 12 V, V_{GS} = 5.0 V)	t_{PHL}	–	331	–	
Low to High Propagation Delay; Figure 2, (V_{DS} = 12 V, V_{GS} = 5.0 V)	t_{PLH}	–	1160	–	
Transition Times:					ns
Fall Time; Figure 2, (V_{DS} = 12 V, V_{GS} = 3.0 V)	t_f	–	2290	–	
Rise Time; Figure 2, (V_{DS} = 12 V, V_{GS} = 3.0 V)	t_r	–	618	–	
Fall Time; Figure 2, (V_{DS} = 12 V, V_{GS} = 5.0 V)	t_f	–	622	–	
Rise Time; Figure 2, (V_{DS} = 12 V, V_{GS} = 5.0 V)	t_r	–	600	–	

Product parametric performance is indicated in the Electrical Characteristics for the listed test conditions, unless otherwise noted. Product performance may not be indicated by the Electrical Characteristics if operated under different conditions.

TYPICAL WAVEFORMS

(T_J = 25°C unless otherwise specified)

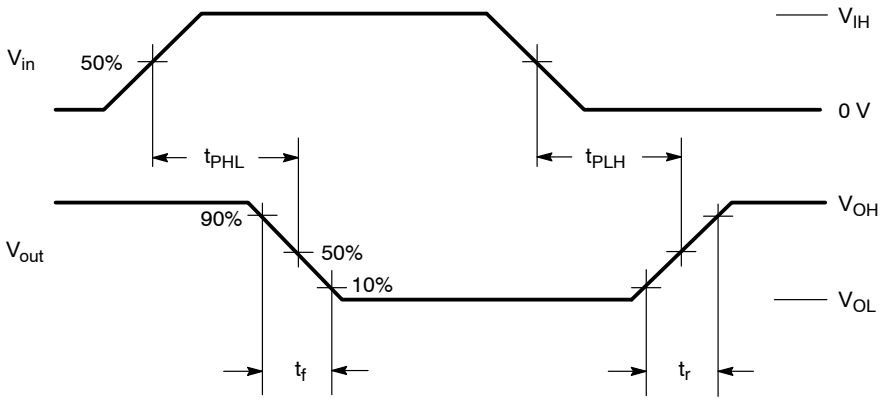

Figure 2. Switching Waveforms

Load Dump Pulse Not Suppressed:
V_r = 13.5 V Nominal ±10%
V_S = 60 V Nominal ±10%
T = 300 ms Nominal ±10%
t_r = 1 – 10 ms ±10%

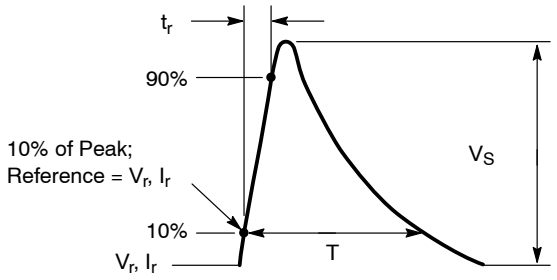

Figure 3. Load Dump Waveform Definition

TYPICAL PERFORMANCE CURVES

(T_J = 25°C unless otherwise specified)

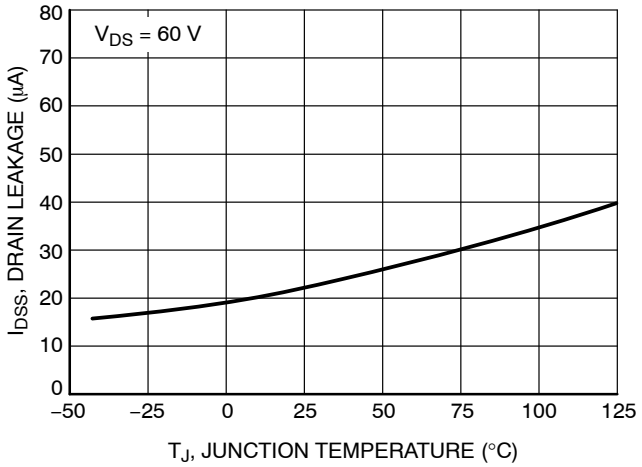

Figure 4. Drain−to−Source Leakage vs. Junction Temperature

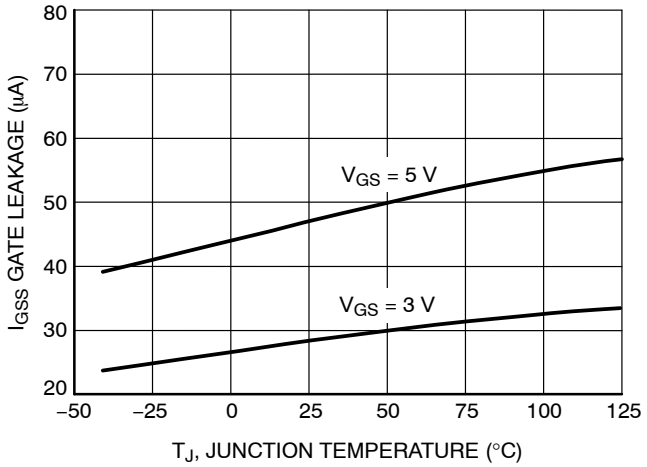

Figure 5. Gate−to−Source Leakage vs. Junction Temperature

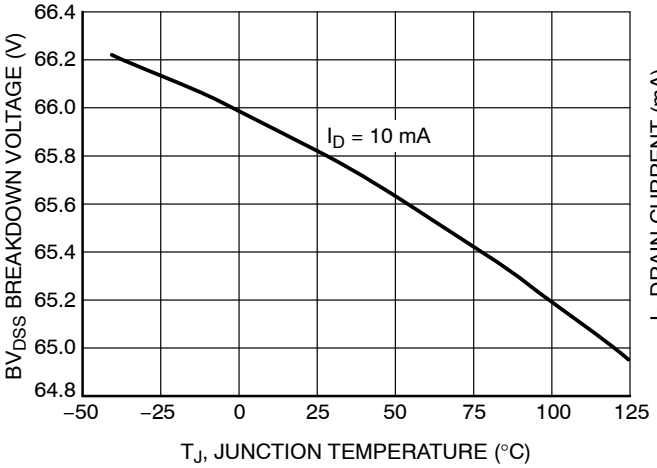

Figure 6. Breakdown Voltage vs. Junction Temperature

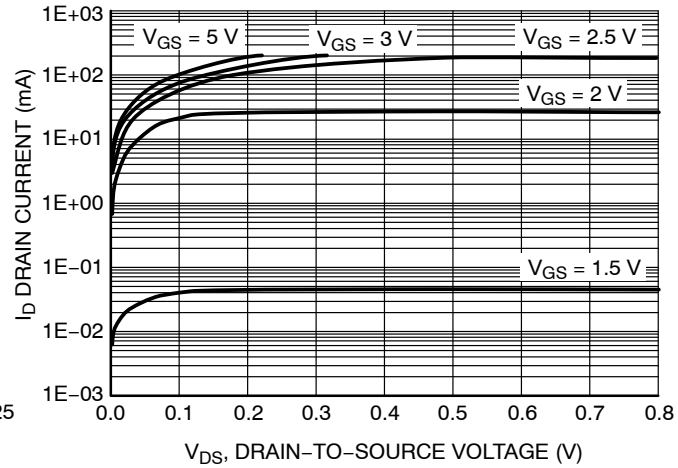

Figure 7. Output Characteristics

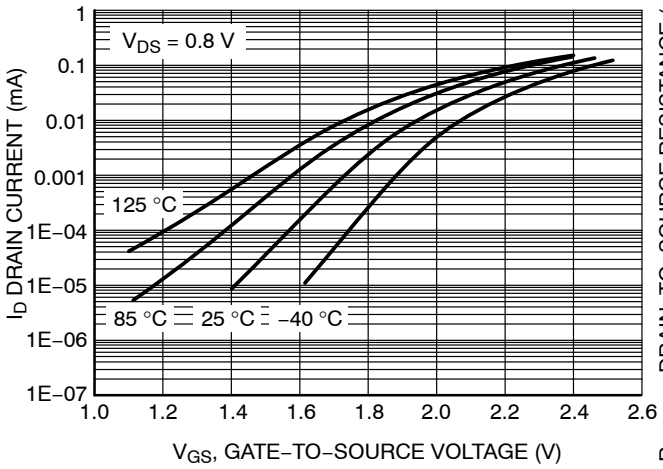

Figure 8. Transfer Function

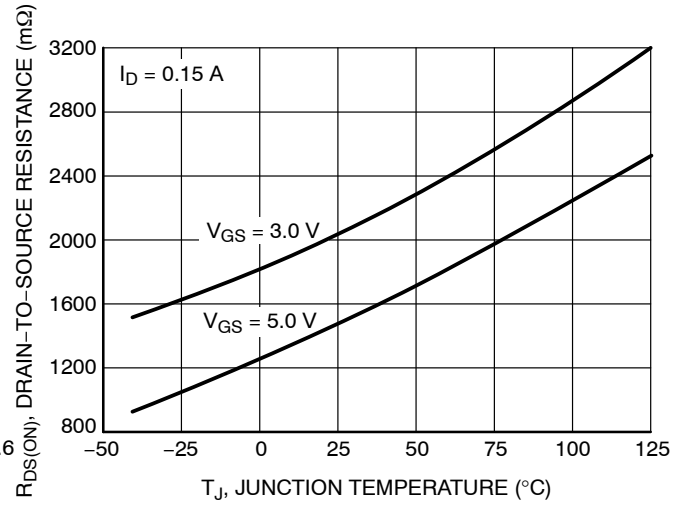

Figure 9. On Resistance Variation vs Junction Temperature

TYPICAL PERFORMANCE CURVES

(T_J = 25°C unless otherwise specified)

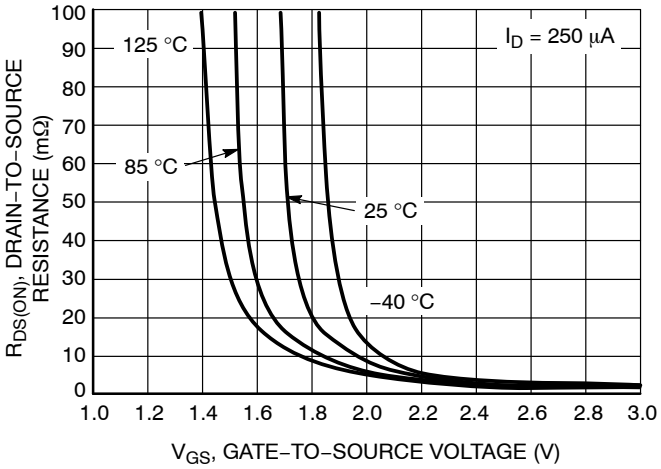

Figure 10. On Resistance Variation vs. Gate−to−Source Voltage

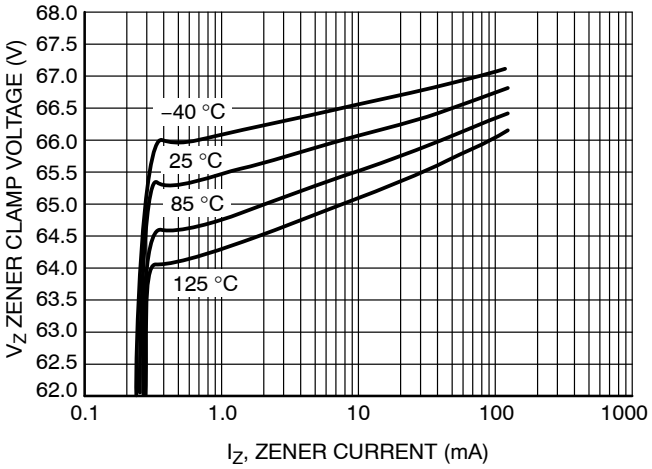

Figure 11. Zener Clamp Voltage vs. Zener Current

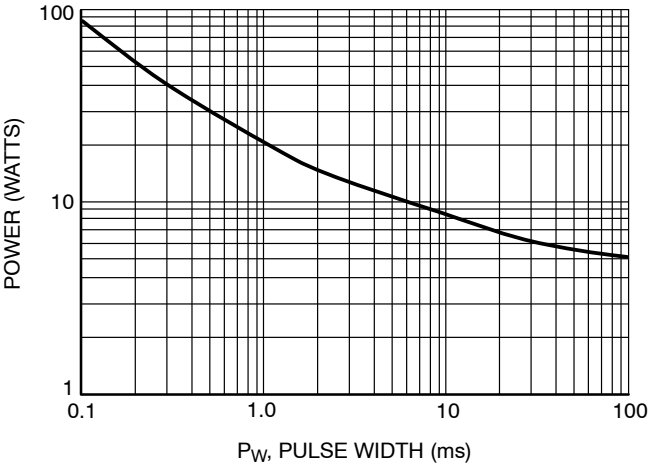

Figure 12. Maximum Non−repetitive Surge Power vs. Pulse Width

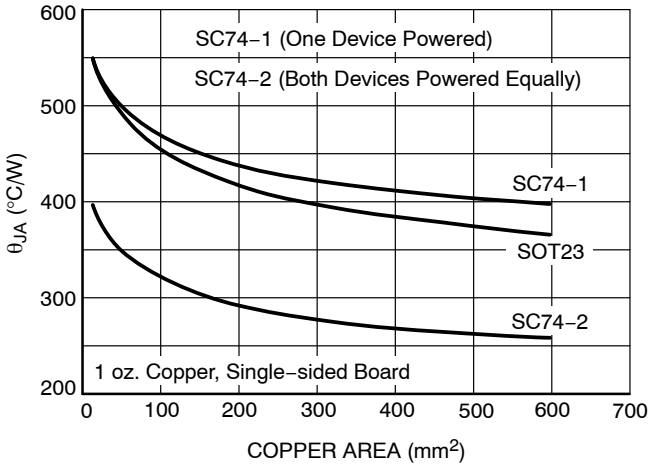

Figure 13. Thermal Performance vs. Board Copper Area

APPLICATIONS INFORMATION

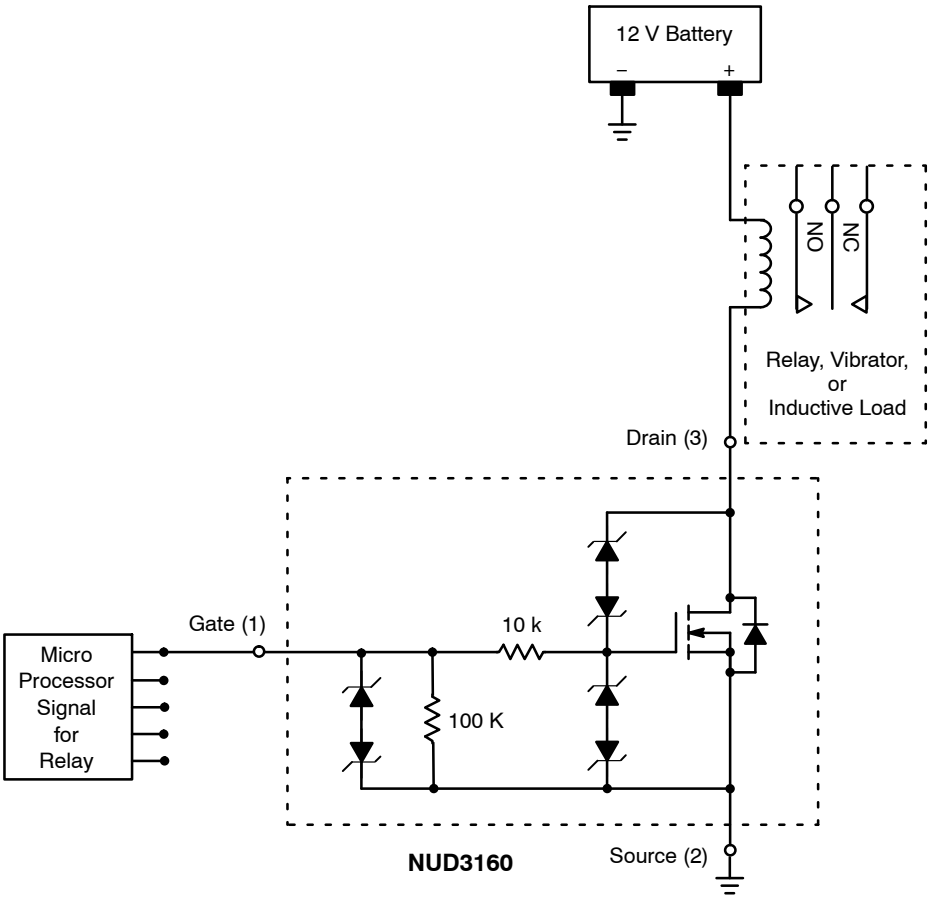

Figure 14. Applications Diagram

PACKAGE DIMENSIONS

SOT−23 (TO−236)
CASE 318−08
ISSUE AR

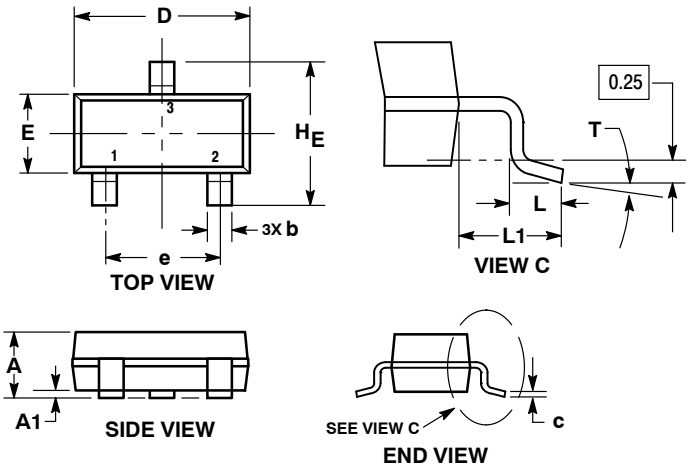

NOTES:
1. DIMENSIONING AND TOLERANCING PER ASME Y14.5M, 1994.
2. CONTROLLING DIMENSION: MILLIMETERS.
3. MAXIMUM LEAD THICKNESS INCLUDES LEAD FINISH. MINIMUM LEAD THICKNESS IS THE MINIMUM THICKNESS OF THE BASE MATERIAL.
4. DIMENSIONS D AND E DO NOT INCLUDE MOLD FLASH, PROTRUSIONS, OR GATE BURRS.

	MILLIMETERS			INCHES		
DIM	MIN	NOM	MAX	MIN	NOM	MAX
A	0.89	1.00	1.11	0.035	0.039	0.044
A1	0.01	0.06	0.10	0.000	0.002	0.004
b	0.37	0.44	0.50	0.015	0.017	0.020
c	0.08	0.14	0.20	0.003	0.006	0.008
D	2.80	2.90	3.04	0.110	0.114	0.120
E	1.20	1.30	1.40	0.047	0.051	0.055
e	1.78	1.90	2.04	0.070	0.075	0.080
L	0.30	0.43	0.55	0.012	0.017	0.022
L1	0.35	0.54	0.69	0.014	0.021	0.027
H_E	2.10	2.40	2.64	0.083	0.094	0.104
T	0°	–––	10 °	0 °	–––	10 °

STYLE 21:
PIN 1. GATE
2. SOURCE
3. DRAIN

RECOMMENDED SOLDERING FOOTPRINT*

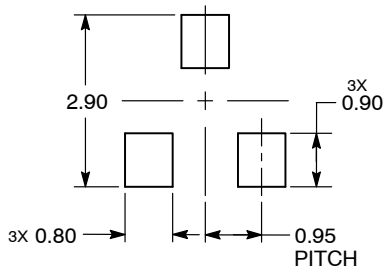

DIMENSIONS: MILLIMETERS

*For additional information on our Pb−Free strategy and soldering details, please download the ON Semiconductor Soldering and Mounting Techniques Reference Manual, SOLDERRM/D.

PACKAGE DIMENSIONS

SC−74
CASE 318F−05
ISSUE N

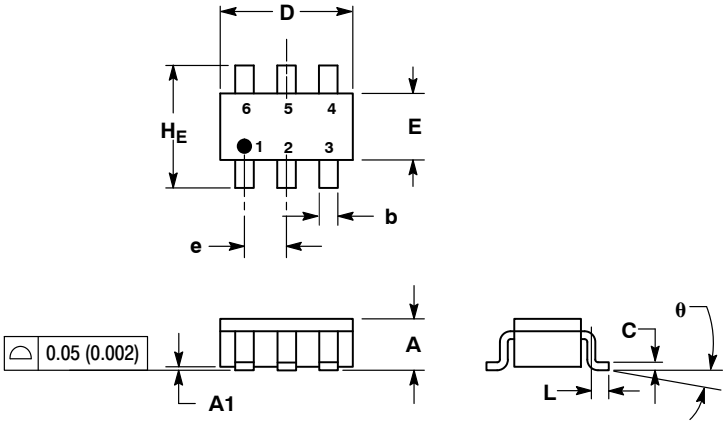

NOTES:
1. DIMENSIONING AND TOLERANCING PER ANSI Y14.5M, 1982.
2. CONTROLLING DIMENSION: INCH.
3. MAXIMUM LEAD THICKNESS INCLUDES LEAD FINISH THICKNESS. MINIMUM LEAD THICKNESS IS THE MINIMUM THICKNESS OF BASE MATERIAL.
4. 318F−01, −02, −03, −04 OBSOLETE. NEW STANDARD 318F−05.

	MILLIMETERS			INCHES		
DIM	MIN	NOM	MAX	MIN	NOM	MAX
A	0.90	1.00	1.10	0.035	0.039	0.043
A1	0.01	0.06	0.10	0.001	0.002	0.004
b	0.25	0.37	0.50	0.010	0.015	0.020
c	0.10	0.18	0.26	0.004	0.007	0.010
D	2.90	3.00	3.10	0.114	0.118	0.122
E	1.30	1.50	1.70	0.051	0.059	0.067
e	0.85	0.95	1.05	0.034	0.037	0.041
L	0.20	0.40	0.60	0.008	0.016	0.024
H_E	2.50	2.75	3.00	0.099	0.108	0.118
θ	0°	–	10°	0°	–	10°

STYLE 7:
PIN 1. SOURCE 1
2. GATE 1
3. DRAIN 2
4. SOURCE 2
5. GATE 2
6. DRAIN 1

SOLDERING FOOTPRINT*

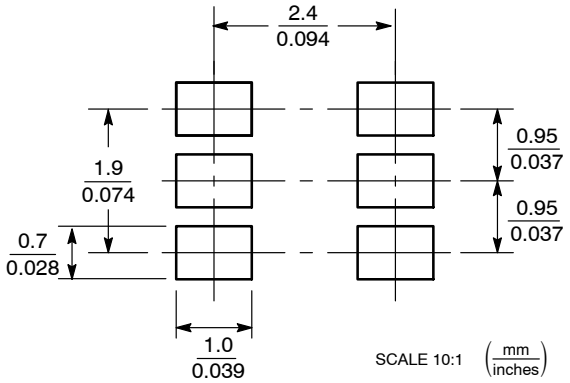

*For additional information on our Pb−Free strategy and soldering details, please download the ON Semiconductor Soldering and Mounting Techniques Reference Manual, SOLDERRM/D.

ON Semiconductor and ON are trademarks of Semiconductor Components Industries, LLC dba ON Semiconductor or its subsidiaries in the United States and/or other countries. ON Semiconductor owns the rights to a number of patents, trademarks, copyrights, trade secrets, and other intellectual property. A listing of ON Semiconductor's product/patent coverage may be accessed at www.onsemi.com/site/pdf/Patent−Marking.pdf. ON Semiconductor reserves the right to make changes without further notice to any products herein. ON Semiconductor makes no warranty, representation or guarantee regarding the suitability of its products for any particular purpose, nor does ON Semiconductor assume any liability arising out of the application or use of any product or circuit, and specifically disclaims any and all liability, including without limitation special, consequential or incidental damages. Buyer is responsible for its products and applications using ON Semiconductor products, including compliance with all laws, regulations and safety requirements or standards, regardless of any support or applications information provided by ON Semiconductor. "Typical" parameters which may be provided in ON Semiconductor data sheets and/or specifications can and do vary in different applications and actual performance may vary over time. All operating parameters, including "Typicals" must be validated for each customer application by customer's technical experts. ON Semiconductor does not convey any license under its patent rights nor the rights of others. ON Semiconductor products are not designed, intended, or authorized for use as a critical component in life support systems or any FDA Class 3 medical devices or medical devices with a same or similar classification in a foreign jurisdiction or any devices intended for implantation in the human body. Should Buyer purchase or use ON Semiconductor products for any such unintended or unauthorized application, Buyer shall indemnify and hold ON Semiconductor and its officers, employees, subsidiaries, affiliates, and distributors harmless against all claims, costs, damages, and expenses, and reasonable attorney fees arising out of, directly or indirectly, any claim of personal injury or death associated with such unintended or unauthorized use, even if such claim alleges that ON Semiconductor was negligent regarding the design or manufacture of the part. ON Semiconductor is an Equal Opportunity/Affirmative Action Employer. This literature is subject to all applicable copyright laws and is not for resale in any manner.

PUBLICATION ORDERING INFORMATION

LITERATURE FULFILLMENT:
Literature Distribution Center for ON Semiconductor
19521 E. 32nd Pkwy, Aurora, Colorado 80011 USA
Phone: 303−675−2175 or 800−344−3860 Toll Free USA/Canada
Fax: 303−675−2176 or 800−344−3867 Toll Free USA/Canada
Email: orderlit@onsemi.com

N. American Technical Support: 800−282−9855 Toll Free USA/Canada
Europe, Middle East and Africa Technical Support:
Phone: 421 33 790 2910
Japan Customer Focus Center
Phone: 81−3−5817−1050

ON Semiconductor Website: **www.onsemi.com**

Order Literature: http://www.onsemi.com/orderlit

For additional information, please contact your local Sales Representative

Looking for pricing, stock, or lifecycle information?

Click below to explore more details on WIN SOURCE:

- View SZNUD3160DMT1G on WIN SOURCE
- ON Semiconductor Information

Optimize Your Supply Chain with WIN SOURCE Solutions

- Global Sourcing Solution
- Obsolete Management
- Cost Control Management
- Shortage Management
- Alternative Solution
- Excess Inventory Management