THE DATASHEET OF

PS2811-4-A

www.win-source.net 0086-755-83957316

PS2811-1,PS2811-4

Data Sheet

R08DS0104EJ0500
Rev.5.00
Jan 23, 2013

LOW INPUT CURRENT, HIGH CTR 4, 16-PIN SSOP PHOTOCOUPLER

DESCRIPTION

The PS2811-1 and PS2811-4 are optically coupled isolators containing a GaAs light emitting diode and an NPN silicon phototransistor in a plastic SSOP for high density applications.

The package is a Shrink SOP (Small Outline Package) type for high density mounting applications.

FEATURES

- High current transfer ratio (CTR = 200% TYP. @ I_F = 1 mA)
- High isolation voltage (BV = 2 500 Vr.m.s.)
- Small and thin package (4, 16-pin SSOP, Pin pitch 1.27 mm)
- <R> Ordering number of taping product: PS2811-1-F3: 3 500 pcs/reel
  : PS2811-4-F3: 2 500 pcs/reel
- Pb-Free product
- <R> Safety standards
  - UL approved: No. E72422
  - CSA approved: No. CA 101391 (CA5A, CAN/CSA-C22.2 60065, 60950)
  - DIN EN 60747-5-5 (VDE 0884-5) approved (Option)

PIN CONNECTION
(Top View)

PS2811-1

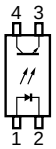

1. Annode
2. Cathode
3. Emitter
4. Collector

PS2811-4

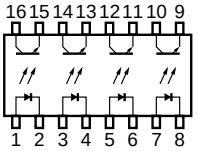

1. 3. 5. 7. Annode
2. 4. 6. 8. Cathode
9. 11. 13. 15. Emitter
10. 12. 14. 16. Collector

APPLICATIONS

- Programmable logic controllers
- Small power supply
- Hybrid IC
- Modem/FAX

The mark <R> shows major revised points.
The revised points can be easily searched by copying an "<R>" in the PDF file and specifying it in the "Find what:" field.

PACKAGE DIMENSIONS (UNIT: mm)

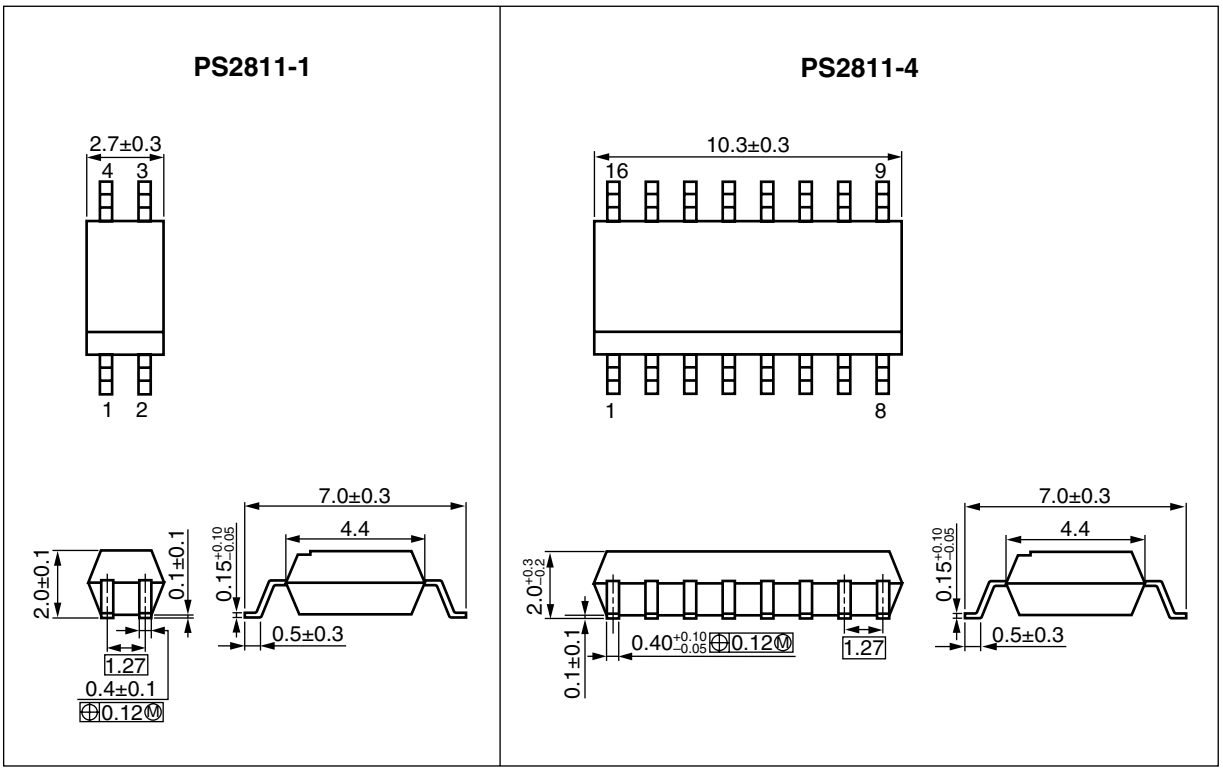

PHOTOCOUPLER CONSTRUCTION

Parameter	Unit (MIN.)
Air Distance	4.5 mm
Outer Creepage Distance	4.5 mm
Inner Creepage Distance	2.5 mm
Isolation Thickness	0.1 mm

<R> MARKING EXAMPLE

PS2811-1

Made in Taiwan	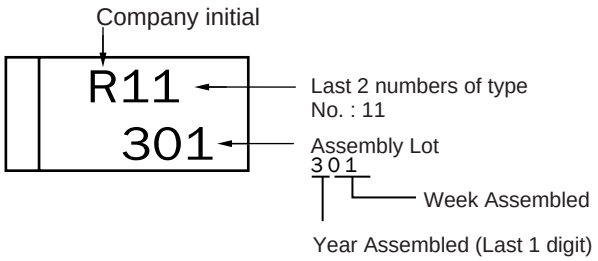
Made in Japan	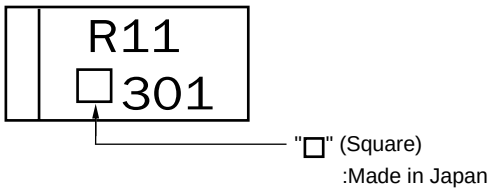

PS2811-4

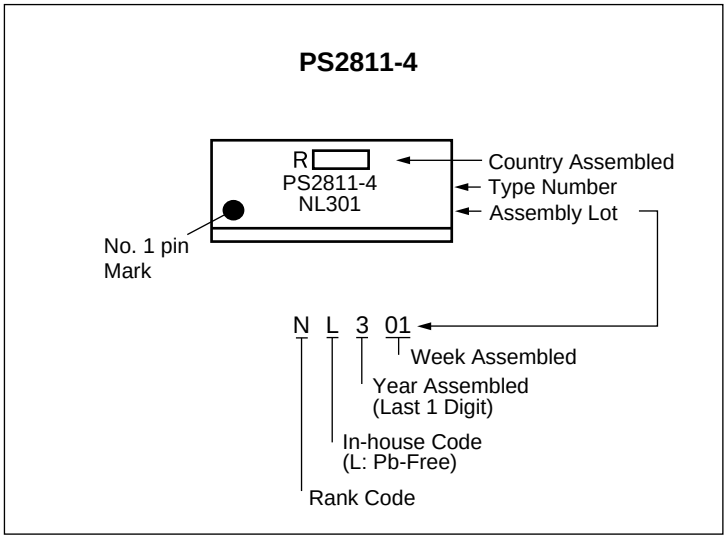

<R> ORDERING INFORMATION

Part Number	Order Number	Solder Plating Specification	Packing Style	Safety Standard Approval	Application Part Number*1
PS2811-1-F3	PS2811-1-F3-A	Pb-Free	Embossed Tape 3 500 pcs/reel	Standard products (UL, CSA approved)	PS2811-1
PS2811-1-V-F3	PS2811-1-V-F3-A		Embossed Tape 3 500 pcs/reel	DIN EN 60747-5-5 (VDE 0884-5) Approved (Option)	
PS2811-4-F3	PS2811-4-F3-A		Embossed Tape 2 500 pcs/reel	Standard products (UL, CSA approved)	PS2811-4
PS2811-4-V-F3	PS2811-4-V-F3-A		Embossed Tape 2 500 pcs/reel	DIN EN 60747-5-5 (VDE 0884-5) Approved (Option)	

Note: *1. For the application of the Safety Standard, following part number should be used.

ABSOLUTE MAXIMUM RATINGS (T_A = 25°C, unless otherwise specified)

Parameter		Symbol	Ratings		Unit
			PS2811-1	PS2811-4	
Diode	Forward Current (DC)	I_F	50		mA/ch
	Reverse Voltage	V_R	6		V
	Power Dissipation Derating	ΔP_D/°C	0.6	0.7	mW/°C
	Power Dissipation	P_D	60	70	mW/ch
	Peak Forward Current*1	I_{FP}	1.0		A/ch
Transistor	Collector to Emitter Voltage	V_{CEO}	40		V
	Emitter to Collector Voltage	V_{ECO}	5		V
	Collector Current	I_C	40		mA/ch
	Power Dissipation Derating	ΔP_C/°C	1.2		mW/°C
	Power Dissipation	P_C	120		mW/ch
Isolation Voltage*2		BV	2 500		Vr.m.s.
Operating Ambient Temperature		T_A	–55 to +100		°C
Storage Temperature		T_{stg}	–55 to +150		°C

Notes: *1. PW = 100 μs, Duty Cycle = 1%
*2. AC voltage for 1 minute at T_A = 25°C, RH = 60% between input and output.
Pins 1-2 shorted together, 3-4 shorted together (PS2811-1).
Pins 1-8 shorted together, 9-16 shorted together (PS2811-4).

ELECTRICAL CHARACTERISTICS (T_A = 25°C)

Parameter		Symbol	Conditions	MIN.	TYP.	MAX.	Unit
Diode	Forward Voltage	V_F	I_F = 5 mA		1.15	1.4	V
	Reverse Current	I_R	V_R = 5 V			5	μA
	Terminal Capacitance	C_t	V = 0 V, f = 1 MHz		15		pF
Transistor	Collector to Emitter Dark Current	I_{CEO}	I_F = 0 mA, V_{CE} = 40 V			100	nA
Coupled	Current Transfer Ratio (I_C/I_F) *1	CTR	I_F = 1 mA, V_{CE} = 5 V	100	200	400	%
	Collector Saturation Voltage	$V_{CE\ (sat)}$	I_F = 1 mA, I_C = 0.2 mA			0.3	V
	Isolation Resistance	R_{I-O}	V_{I-O} = 1 kV_{DC}	10^{11}			Ω
	Isolation Capacitance	C_{I-O}	V = 0 V, f = 1 MHz		0.4		pF
	Rise Time *2	t_r	V_{CC} = 5 V, I_C = 2 mA, R_L = 100 Ω		4		μs
	Fall Time *2	t_f			5		
<R>	Turn-on Time *2	t_{on}			7		
<R>	Turn-off Time *2	t_{off}			5		

Notes: *1. CTR rank

PS2811-1

N : 100 to 400 (%)

K : 200 to 400 (%)

L : 150 to 300 (%)

M: 100 to 200 (%)

PS2811-4

N : 100 to 400 (%)

*2. Test circuit for switching time

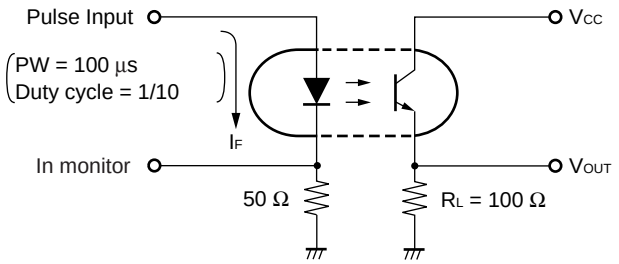

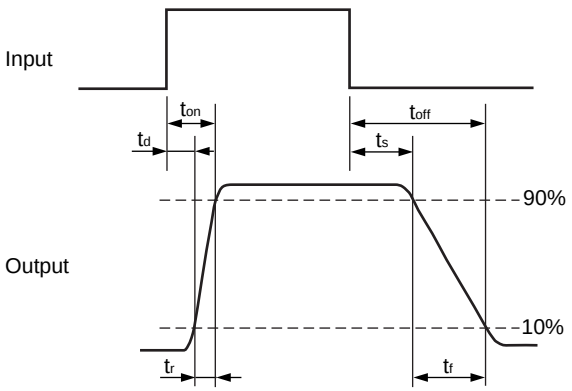

<R> TYPICAL CHARACTERISTICS (T_A = 25°C, unless otherwise specified)

DIODE POWER DISSIPATION vs. AMBIENT TEMPERATURE

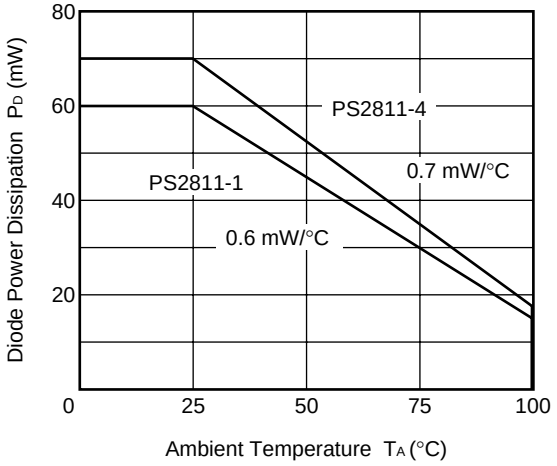

TRANSISTOR POWER DISSIPATION vs. AMBIENT TEMPERATURE

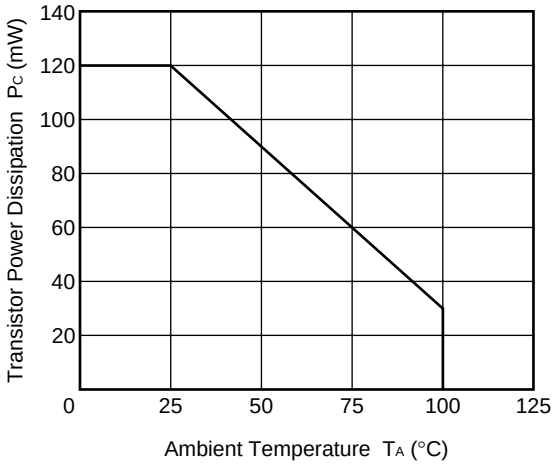

FORWARD CURRENT vs. FORWARD VOLTAGE

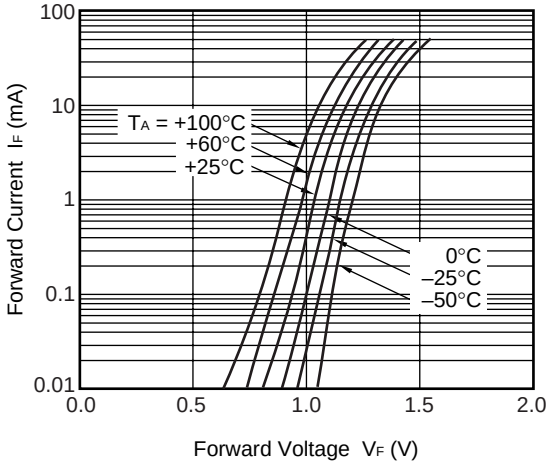

COLLECTOR CURRENT vs. COLLECTOR TO EMITTER VOLTAGE

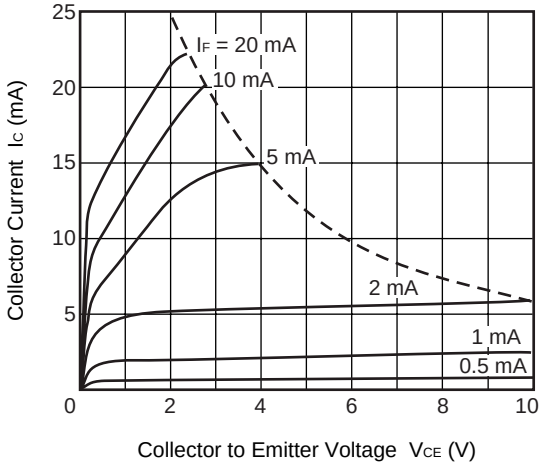

COLLECTOR TO EMITTER DARK CURRENT vs. AMBIENT TEMPERATURE

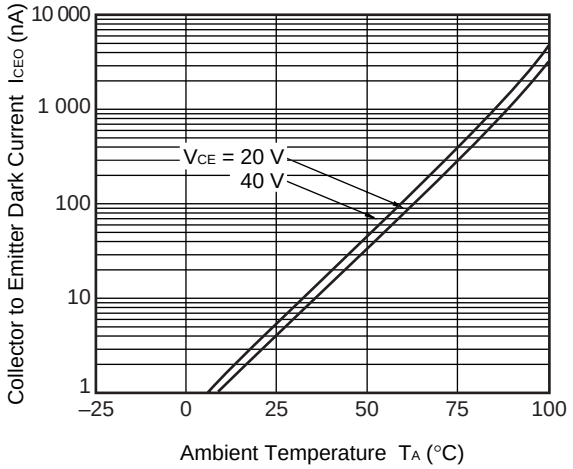

COLLECTOR CURRENT vs. COLLECTOR SATURATION VOLTAGE

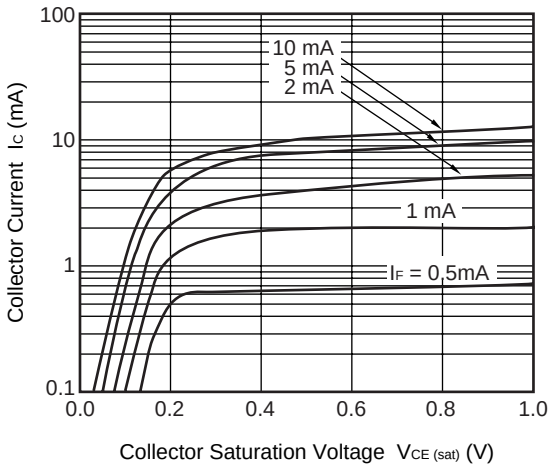

Remark The graphs indicate nominal characteristics.

NORMALIZED CURRENT TRANSFER RATIO vs. AMBIENT TEMPERATURE

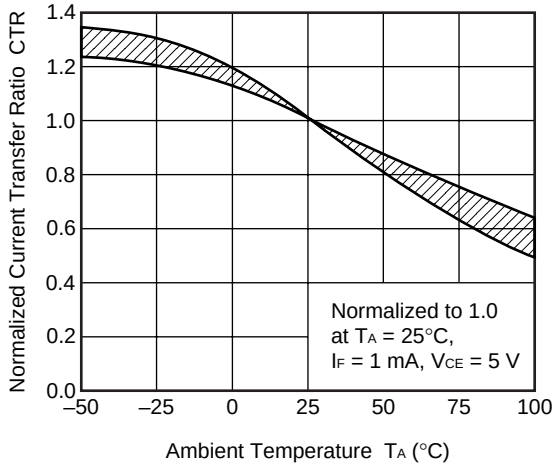

CURRENT TRANSFER RATIO vs. FORWARD CURRENT

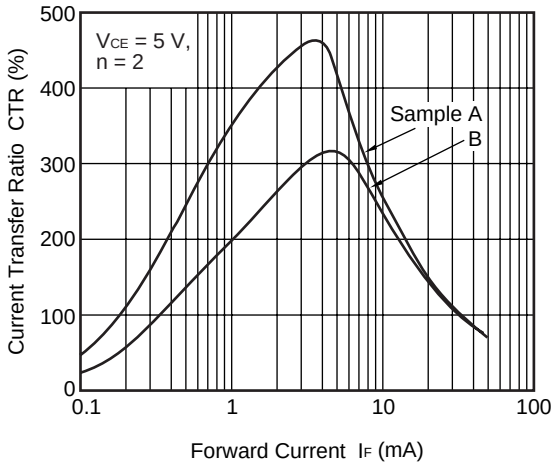

SWITCHING TIME vs. LOAD RESISTANCE

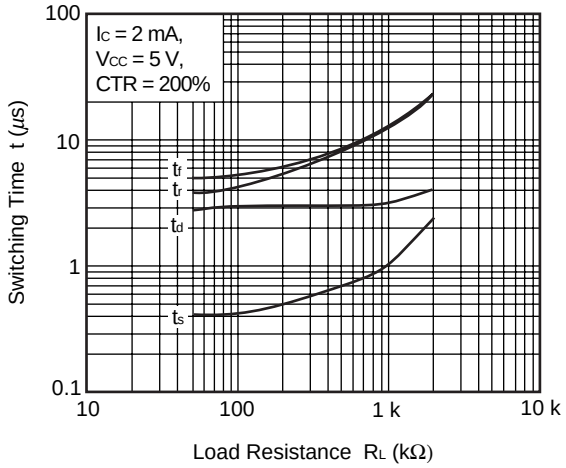

SWITCHING TIME vs. LOAD RESISTANCE

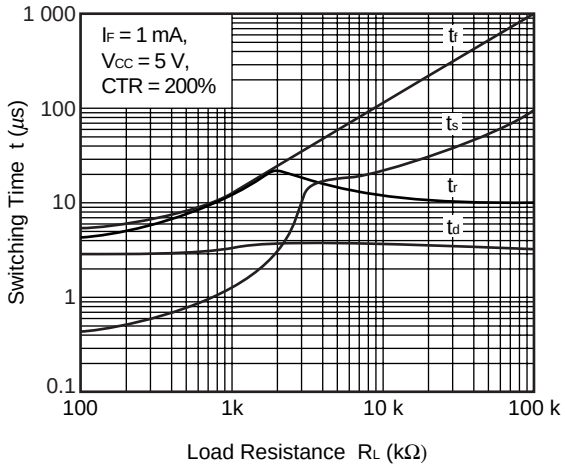

FREQUENCY RESPONSE

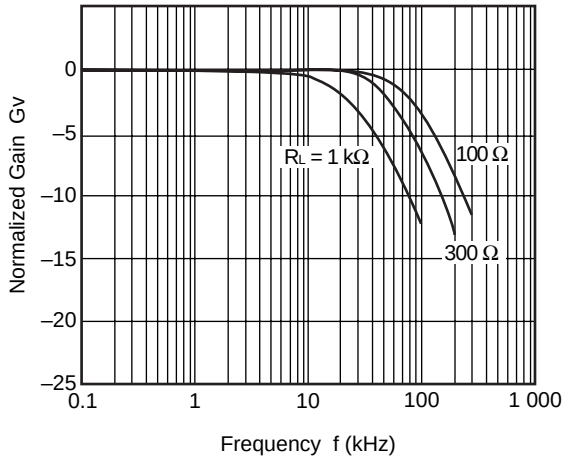

Remark The graphs indicate nominal characteristics.

<R> TAPING SPECIFICATIONS (UNIT: mm)

Outline and Dimensions (Tape)

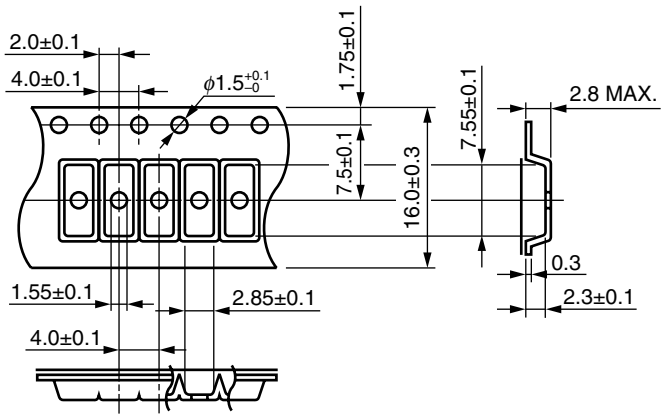

Tape Direction

PS2811-1-F3

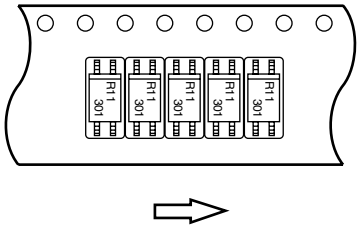

Outline and Dimensions (Reel)

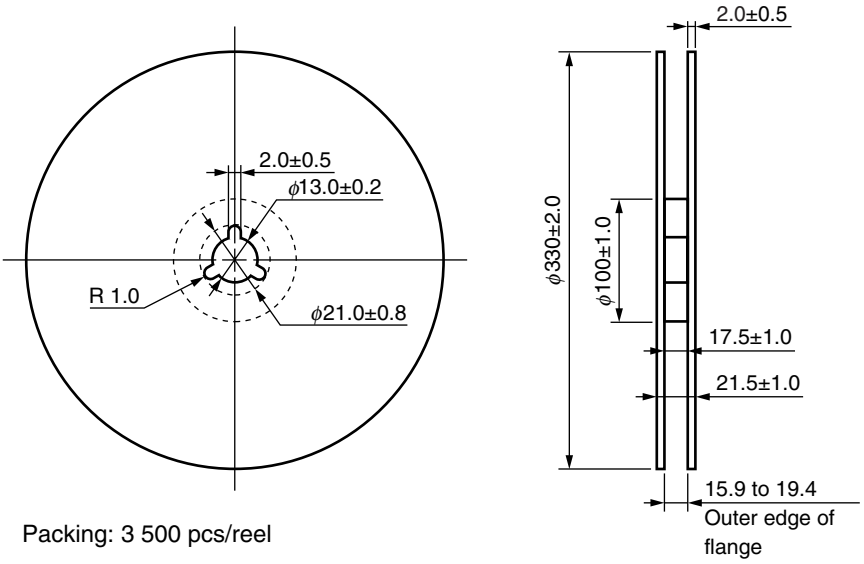

Packing: 3 500 pcs/reel

Outline and Dimensions (Tape)

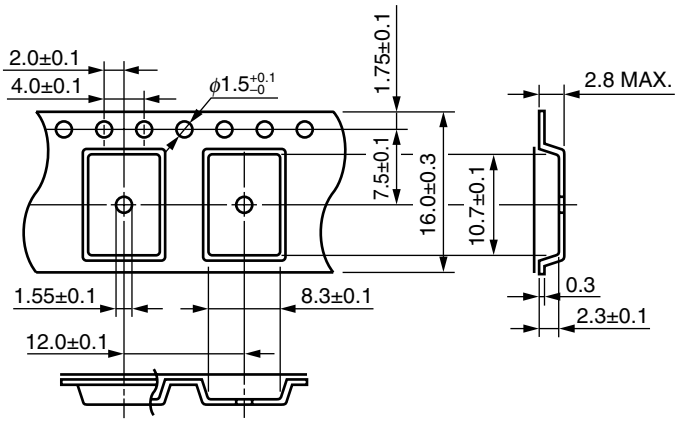

Tape Direction

<R>

PS2811-4-F3

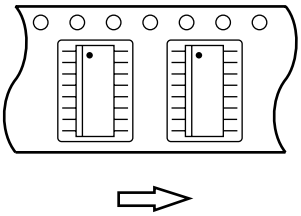

Outline and Dimensions (Reel)

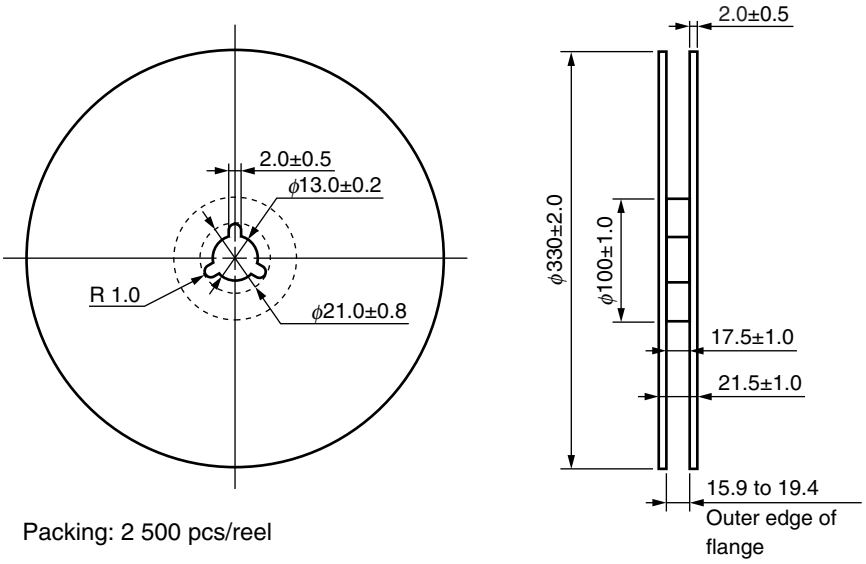

Packing: 2 500 pcs/reel

<R> RECOMMENDED MOUNT PAD DIMENSIONS (UNIT: mm)

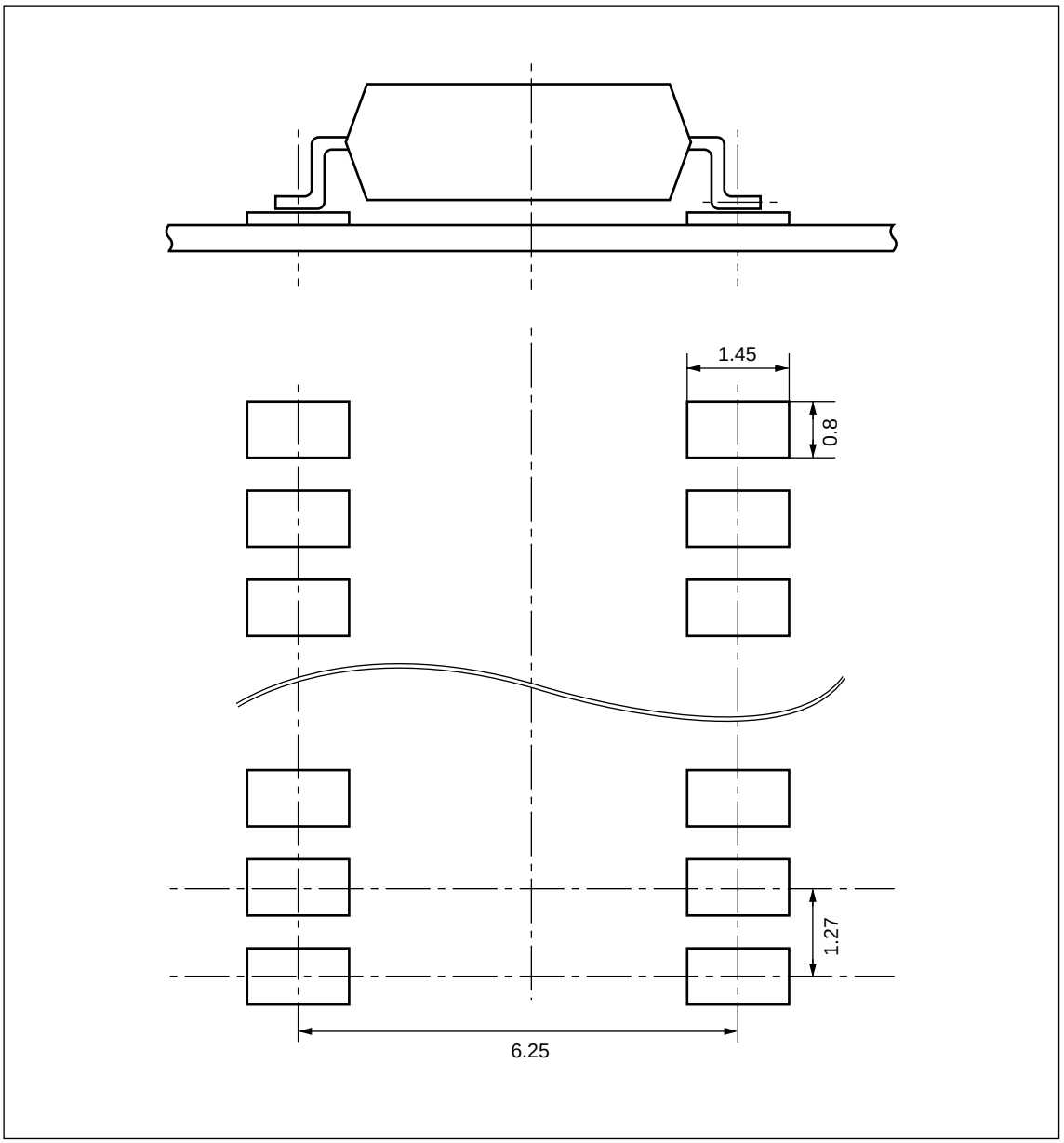

Remark All dimensions in this figure must be evaluated before use.

NOTES ON HANDLING

1. Recommended soldering conditions

(1) Infrared reflow soldering

- Peak reflow temperature — 260°C or below (package surface temperature)
- Time of peak reflow temperature — 10 seconds or less
- Time of temperature higher than 220°C — 60 seconds or less
- Time to preheat temperature from 120 to 180°C — 120±30 s
- Number of reflows — Three
- Flux — Rosin flux containing small amount of chlorine (The flux with a maximum chlorine content of 0.2 Wt% is recommended.)

Recommended Temperature Profile of Infrared Reflow

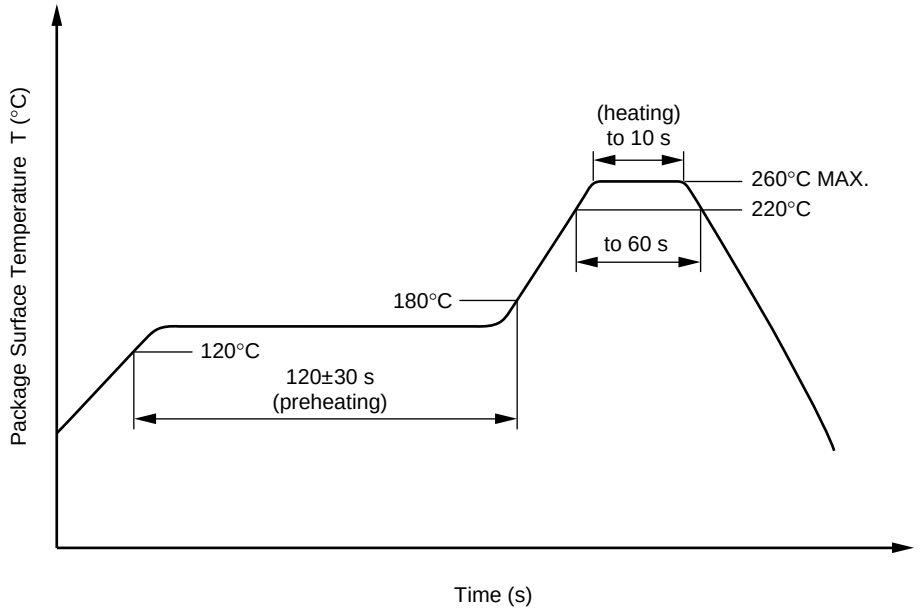

(2) Wave soldering

- Temperature — 260°C or below (molten solder temperature)
- Time — 10 seconds or less
- Preheating conditions — 120°C or below (package surface temperature)
- Number of times — One (Allowed to be dipped in solder including plastic mold portion.)
- Flux — Rosin flux containing small amount of chlorine (The flux with a maximum chlorine content of 0.2 Wt% is recommended.)

(3) Soldering by Soldering Iron

- Peak Temperature (lead part temperature) — 350°C or below
- Time (each pins) — 3 seconds or less
- Flux — Rosin flux containing small amount of chlorine (The flux with a maximum chlorine content of 0.2 Wt% is recommended.)

<R> (a) Soldering of leads should be made at the point 1.5 to 2.0 mm from the root of the lead

(4) Cautions

- Fluxes — Avoid removing the residual flux with freon-based and chlorine-based cleaning solvent.

2. Cautions regarding noise

Be aware that when voltage is applied suddenly between the photocoupler's input and output or between collector-emitters at startup, the output transistor may enter the on state, even if the voltage is within the absolute maximum ratings.

3. Measurement conditions of current transfer ratios (CTR), which differ according to photocoupler

Check the setting values before use, since the forward current conditions at CTR measurement differ according to product.

When using products other than at the specified forward current, the characteristics curves may differ from the standard curves due to CTR value variations or the like. Therefore, check the characteristics under the actual operating conditions and thoroughly take variations or the like into consideration before use.

USAGE CAUTIONS

1. Protect against static electricity when handling.
2. Avoid storage at a high temperature and high humidity.

SPECIFICATION OF VDE MARKS LICENSE DOCUMENT

Parameter	Symbol	Spec.	Unit
Climatic test class (IEC 60068-1/DIN EN 60068-1)		55/100/21	
Dielectric strength maximum operating isolation voltage <R> Test voltage (partial discharge test, procedure a for type test and random test) <R> U_{pr} = 1.6 × U_{IORM}, P_d < 5 pC	 U_{IORM} U_{pr}	 705 1 128	 V_{peak} V_{peak}
Test voltage (partial discharge test, procedure b for all devices) U_{pr} = 1.875 × U_{IORM}, P_d < 5 pC	U_{pr}	1 322	V_{peak}
Highest permissible overvoltage	U_{TR}	6 000	V_{peak}
Degree of pollution (DIN EN 60664-1 VDE 0110 Part 1)		2	
Comparative tracking index (IEC 60112/DIN EN 60112 (VDE 0303 Part 11))	CTI	175	
Material group (DIN EN 60664-1 VDE 0110 Part 1)		III a	
Storage temperature range	T_{stg}	–55 to +150	°C
Operating temperature range	T_A	–55 to +100	°C
Isolation resistance, minimum value V_{IO} = 500 V dc at T_A = 25°C V_{IO} = 500 V dc at T_A MAX. at least 100°C	 Ris MIN. Ris MIN.	 10^{12} 10^{11}	 Ω Ω
Safety maximum ratings (maximum permissible in case of fault, see thermal derating curve) Package temperature Current (input current I_F, Psi = 0) Power (output or total power dissipation) Isolation resistance V_{IO} = 500 V dc at T_A = Tsi	 Tsi Isi Psi Ris MIN.	 150 300 500 10^9	 °C mA mW Ω

Caution GaAs Products	This product uses gallium arsenide (GaAs). GaAs vapor and powder are hazardous to human health if inhaled or ingested, so please observe the following points. • Follow related laws and ordinances when disposing of the product. If there are no applicable laws and/or ordinances, dispose of the product as recommended below. 1. Commission a disposal company able to (with a license to) collect, transport and dispose of materials that contain arsenic and other such industrial waste materials. 2. Exclude the product from general industrial waste and household garbage, and ensure that the product is controlled (as industrial waste subject to special control) up until final disposal. • Do not burn, destroy, cut, crush, or chemically dissolve the product. • Do not lick the product or in any way allow it to enter the mouth.

Revision History	PS2811-1, PS2811-4 Data Sheet

Rev.	Date	Description	
		Page	Summary
1.00	Apr 18, 2000	–	This data sheet was released as PN10255EJ01V0DS
5.00	Jan 23, 2013	Throughout	Renesas format is applied to this data sheet.
		p.1	The ordering number and safety standards are revised.
		p.3	The explanation in MARKING EXAMPLE is revised.
		p.4	ORDERING INFORMATION is modified with the revision of the safety standards.
		p.5	Turn-on Time (t_{on}) and Turn-off Time (t_{off}) are added to the table in ELECTRICAL CHARACTERISTICS.
		p.6	The graph of LONG TERM CTR DEGRADATION is deleted from those in TYPICAL CHARACTERISTICS.
		p.8	PS2811-1-F4 is deleted from Tape Direction image in TAPING SPECIFICATIONS.
		p.9	PS2811-4-1-F4 is deleted from Tape Direction image in TAPING SPECIFICATIONS.
		p.10	RECOMMENDED MOUNT PAD DIMENSIONS is added.
		p.11	The note about temperature condition of the recommended soldering conditions is deleted.
		p.13	The values in SPECIFICATION OF VDE MARKS LICENSE DOCUMENT are changed as follows. -- Test voltage is changed from the factor, 1.5, and the value, 1058, to 1.6 and 1128, respectively.

All trademarks and registered trademarks are the property of their respective owners.

NOTICE

1. Descriptions of circuits, software and other related information in this document are provided only to illustrate the operation of semiconductor products and application examples. You are fully responsible for the incorporation of these circuits, software, and information in the design of your equipment. California Eastern Laboratories and Renesas Electronics assumes no responsibility for any losses incurred by you or third parties arising from the use of these circuits, software, or information.
2. California Eastern Laboratories has used reasonable care in preparing the information included in this document, but California Eastern Laboratories does not warrant that such information is error free. California Eastern Laboratories and Renesas Electronics assumes no liability whatsoever for any damages incurred by you resulting from errors in or omissions from the information included herein.
3. California Eastern Laboratories and Renesas Electronics do not assume any liability for infringement of patents, copyrights, or other intellectual property rights of third parties by or arising from the use of Renesas Electronics products or technical information described in this document. No license, express, implied or otherwise, is granted hereby under any patents, copyrights or other intellectual property rights of California Eastern Laboratories or Renesas Electronics or others.
4. You should not alter, modify, copy, or otherwise misappropriate any Renesas Electronics product, whether in whole or in part. California Eastern Laboratories and Renesas Electronics assume no responsibility for any losses incurred by you or third parties arising from such alteration, modification, copy or otherwise misappropriation of Renesas Electronics product.
5. Renesas Electronics products are classified according to the following two quality grades: “Standard” and “High Quality”. The recommended applications for each Renesas Electronics product depends on the product’s quality grade, as indicated below. “Standard”: Computers; office equipment; communications equipment; test and measurement equipment; audio and visual equipment; home electronic appliances; machine tools; personal electronic equipment; and industrial robots etc. “High Quality”: Transportation equipment (automobiles, trains, ships, etc.); traffic control systems; anti-disaster systems; anti-crime systems; and safety equipment etc. Renesas Electronics products are neither intended nor authorized for use in products or systems that may pose a direct threat to human life or bodily injury (artificial life support devices or systems, surgical implantations etc.), or may cause serious property damages (nuclear reactor control systems, military equipment etc.). You must check the quality grade of each Renesas Electronics product before using it in a particular application. You may not use any Renesas Electronics product for any application for which it is not intended. California Eastern Laboratories and Renesas Electronics shall not be in any way liable for any damages or losses incurred by you or third parties arising from the use of any Renesas Electronics product for which the product is not intended by California Eastern Laboratories or Renesas Electronics.
6. You should use the Renesas Electronics products described in this document within the range specified by California Eastern Laboratories, especially with respect to the maximum rating, operating supply voltage range, movement power voltage range, heat radiation characteristics, installation and other product characteristics. California Eastern Laboratories shall have no liability for malfunctions or damages arising out of the use of Renesas Electronics products beyond such specified ranges.
7. Although Renesas Electronics endeavors to improve the quality and reliability of its products, semiconductor products have specific characteristics such as the occurrence of failure at a certain rate and malfunctions under certain use conditions. Further, Renesas Electronics products are not subject to radiation resistance design. Please be sure to implement safety measures to guard them against the possibility of physical injury, and injury or damage caused by fire in the event of the failure of a Renesas Electronics product, such as safety design for hardware and software including but not limited to redundancy, fire control and malfunction prevention, appropriate treatment for aging degradation or any other appropriate measures. Because the evaluation of microcomputer software alone is very difficult, please evaluate the safety of the final products or systems manufactured by you.
8. Please contact a California Eastern Laboratories sales office for details as to environmental matters such as the environmental compatibility of each Renesas Electronics product. Please use Renesas Electronics products in compliance with all applicable laws and regulations that regulate the inclusion or use of controlled substances, including without limitation, the EU RoHS Directive. California Eastern Laboratories and Renesas Electronics assume no liability for damages or losses occurring as a result of your noncompliance with applicable laws and regulations.
9. Renesas Electronics products and technology may not be used for or incorporated into any products or systems whose manufacture, use, or sale is prohibited under any applicable domestic or foreign laws or regulations. You should not use Renesas Electronics products or technology described in this document for any purpose relating to military applications or use by the military, including but not limited to the development of weapons of mass destruction. When exporting the Renesas Electronics products or technology described in this document, you should comply with the applicable export control laws and regulations and follow the procedures required by such laws and regulations.
10. It is the responsibility of the buyer or distributor of California Eastern Laboratories, who distributes, disposes of, or otherwise places the Renesas Electronics product with a third party, to notify such third party in advance of the contents and conditions set forth in this document, California Eastern Laboratories and Renesas Electronics assume no responsibility for any losses incurred by you or third parties as a result of unauthorized use of Renesas Electronics products.
11. This document may not be reproduced or duplicated in any form, in whole or in part, without prior written consent of California Eastern Laboratories.
12. Please contact a California Eastern Laboratories sales office if you have any questions regarding the information contained in this document or Renesas Electronics products, or if you have any other inquiries.

NOTE 1: “Renesas Electronics” as used in this document means Renesas Electronics Corporation and also includes its majority-owned subsidiaries.
NOTE 2: “Renesas Electronics product(s)” means any product developed or manufactured by or for Renesas Electronics.
NOTE 3: Products and product information are subject to change without notice.

CEL Headquarters • 4590 Patrick Henry Drive, Santa Clara, CA 95054 • Phone (408) 919-2500 • www.cel.com

For a complete list of sales offices, representatives and distributors,
Please visit our website: **www.cel.com/contactus**

Looking for pricing, stock, or lifecycle information?

Click below to explore more details on WIN SOURCE:

- View PS2811-4-A on WIN SOURCE
- CEL Information

Optimize Your Supply Chain with WIN SOURCE Solutions

- Global Sourcing Solution
- Obsolete Management
- Cost Control Management
- Shortage Management
- Alternative Solution
- Excess Inventory Management