THE DATASHEET OF

5037726010

www.win-source.net 0086-755-83957316

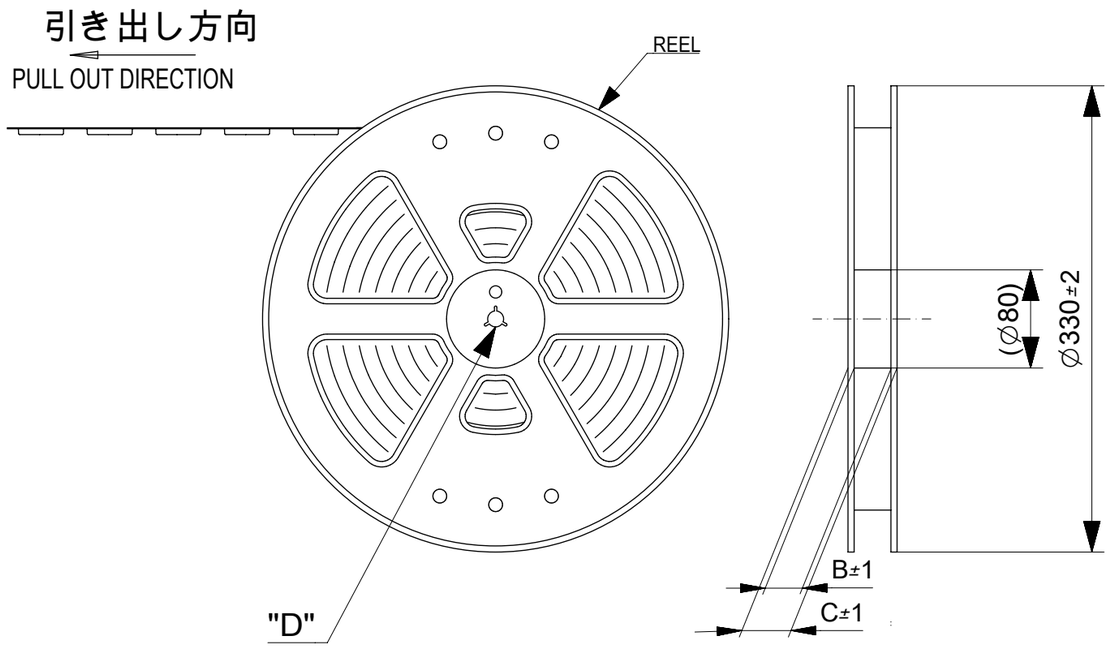

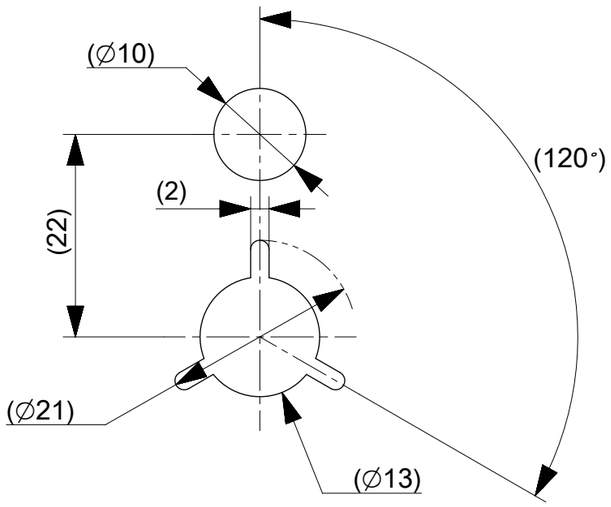

DETAIL "D"

注記　NOTES

1. 製品詳細寸法については製品単体図面を参照下さい。
   RE DETAILED DIMENSION, SEE PRODUCT DRAWING.
2. 梱包数量： 3000個 / リール
   NUMBER OF CONNECTORS : 3000 PCS/REEL.
3. リードテープ長さ LEAD TAPE LENGTH.

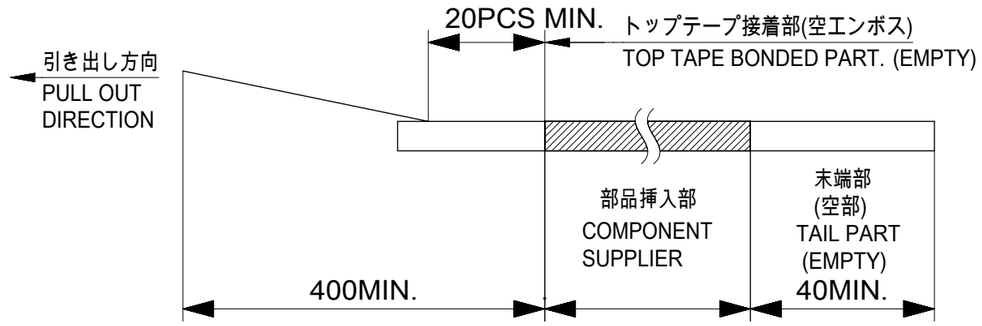

4. カバーテープの剥離強度については、IEC60286-3に準拠。
   COVER TAPE PEEL FORCE IS DEFINED BY IEC60286-3.
5. 材料 MATERIAL
   キャリアテープ(CARRIER TAPE) : ポリスチレン(POLYSTYRENE)
   トップテープ(TOP TAPE) : PET, OTHER
   リール(REEL) : ポリスチレン(PS) < リサイクル材を含む >
   POLYSTYRENE(PS) < RECYCLE MATERIAL CONTAINED >
6. ELV　及び RoHS適合品
   ELV AND RoHS COMPLIANT

THIS DRAWING CONTAINS INFORMATION THAT IS PROPRIETARY TO MOLEX ELECTRONIC TECHNOLOGIES, LLC AND SHOULD NOT BE USED WITHOUT WRITTEN PERMISSION

EC NO: 108729	DRWN: JFURUKAWA	2016/09/21
CHK'D: TASAKAWA		2016/09/27
APPR: KMORIKAWA		2016/09/27
REV	A	

GENERAL TOLERANCES (UNLESS SPECIFIED)

ANGULAR TOL ±	3.0	°
4 PLACES	±	0.03
3 PLACES	±	0.03
2 PLACES	±	0.05
1 PLACE	±	0.1
0 PLACES	±	0.2

DRAFT WHERE APPLICABLE MUST REMAIN WITHIN DIMENSIONS

DIMENSION UNITS	MM
SCALE	NTS
DRWN BY	JFURUKAWA
DATE	2016/09/21
CHK'D BY	TASAKAWA
DATE	2016/09/27
APPR BY	KMORIKAWA
DATE	2016/09/27
DRAWING SIZE	A3
THIRD ANGLE PROJECTION	

molex®

0.4 BB CONN. HGT=0.8 REC ASSY EMBSTP PKG

PRODUCT CUSTOMER DRAWING

SERIES	MATERIAL NUMBER	CUSTOMER
503772	SEE CHART	GENERAL

DOCUMENT NUMBER	DOC TYPE	DOC PART	SHEET NUMBER
5037720000	PSD	000	1 OF 3

RELEASE STATUS	P1	RELEASE DATE	27.09.2016 05:11:48

FORMAT: tb-prod-A3
REVISION: G
DATE: 2015/12/14

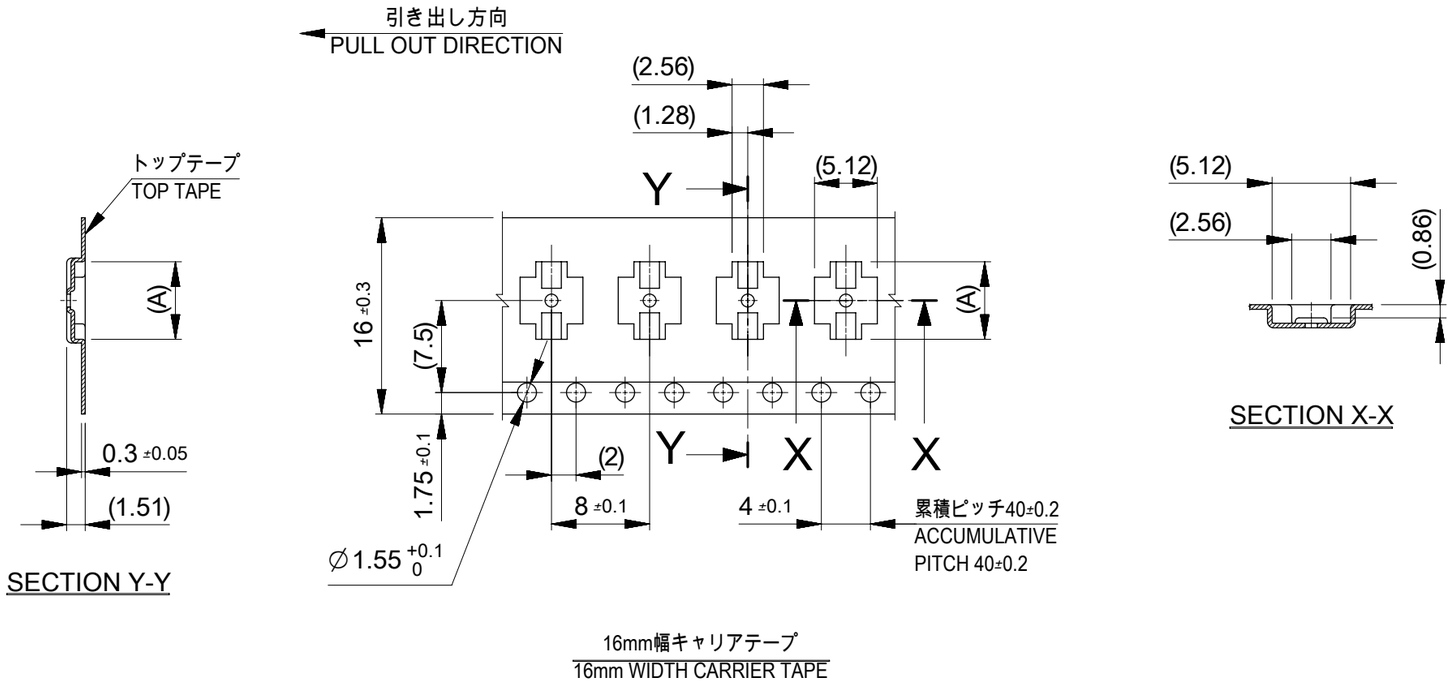

キャリアテープ幅 CARRIER TAPE WIDTH	C	B	(A)	MATERIAL NO.	CKT.
16	21.4	17.4	7.32	503772-2410	24
			6.52	503772-2010	20
			5.72	503772-1610	16
			4.52	503772-1010	10
				MODEL NO.	503772-***0

THIS DRAWING CONTAINS INFORMATION THAT IS PROPRIETARY TO MOLEX ELECTRONIC TECHNOLOGIES, LLC AND SHOULD NOT BE USED WITHOUT WRITTEN PERMISSION

EC NO: 108729	DRWN: JFURUKAWA	2016/09/21
CHK'D: TASAKAWA		2016/09/27
APPR: KMORIKAWA		2016/09/27
REV	A	

GENERAL TOLERANCES (UNLESS SPECIFIED)

ANGULAR TOL	±	3.0 °
4 PLACES	±	0.03
3 PLACES	±	0.03
2 PLACES	±	0.05
1 PLACE	±	0.1
0 PLACES	±	0.2

DRAFT WHERE APPLICABLE MUST REMAIN WITHIN DIMENSIONS

DIMENSION UNITS	SCALE
MM	NTS
DRWN BY: JFURUKAWA	DATE: 2016/09/21
CHK'D BY: TASAKAWA	DATE: 2016/09/27
APPR BY: KMORIKAWA	DATE: 2016/09/27
DRAWING SIZE: A3	THIRD ANGLE PROJECTION

molex®

0.4 BB CONN. HGT=0.8 REC ASSY EMBSTP PKG

PRODUCT CUSTOMER DRAWING

SERIES	MATERIAL NUMBER	CUSTOMER
503772	SEE CHART	GENERAL

DOCUMENT NUMBER	DOC TYPE	DOC PART	SHEET NUMBER
5037720000	PSD	000	2 OF 3

RELEASE STATUS	P1	RELEASE DATE	27.09.2016 05:11:48

FORMAT: master-tb-prod-A3
REVISION: G
DATE: 2015/12/14

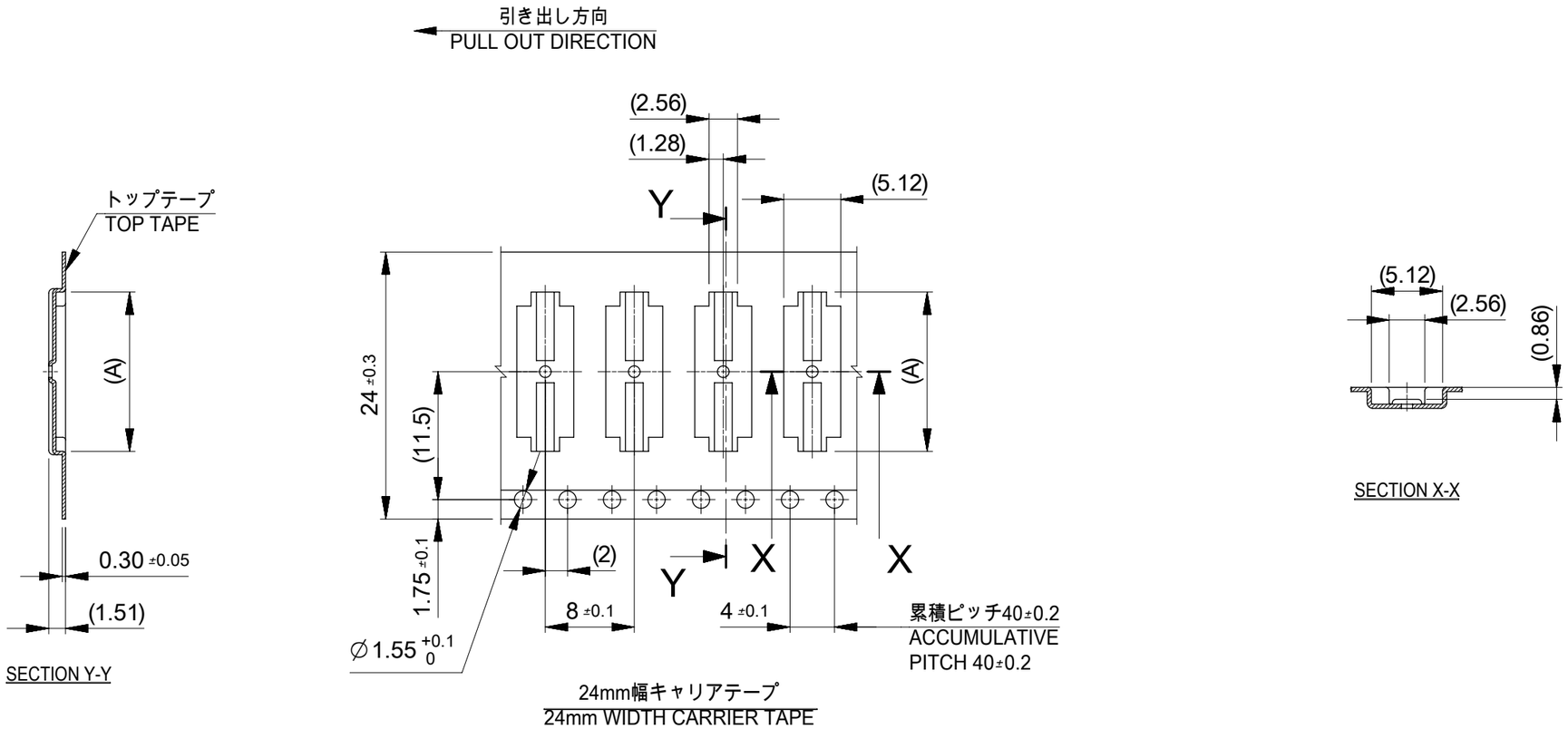

キャリアテープ幅 CARRIER TAPE WIDTH	C	B	(A)	MATERIAL NO.	CKT.
24	29.4	25.4	14.52	503772-6010	60
			12.52	503772-5010	50
			10.52	503772-4010	40
			9.32	503772-3410	34
			8.52	503772-3010	30
				MODEL NO.	503772-***0

THIS DRAWING CONTAINS INFORMATION THAT IS PROPRIETARY TO MOLEX ELECTRONIC TECHNOLOGIES, LLC AND SHOULD NOT BE USED WITHOUT WRITTEN PERMISSION

EC NO: 108729 2016/09/21
DRWN: JFURUKAWA 2016/09/27
CHK'D: TASAKAWA 2016/09/27
APPR: KMORIKAWA 2016/09/27

GENERAL TOLERANCES (UNLESS SPECIFIED)

ANGULAR TOL	± 3.0 °
4 PLACES	± 0.03
3 PLACES	± 0.03
2 PLACES	± 0.05
1 PLACE	± 0.1
0 PLACES	± 0.2

DRAFT WHERE APPLICABLE MUST REMAIN WITHIN DIMENSIONS

REV: A

DIMENSION UNITS: MM
SCALE: NTS
DRWN BY: JFURUKAWA DATE: 2016/09/21
CHK'D BY: TASAKAWA DATE: 2016/09/27
APPR BY: KMORIKAWA DATE: 2016/09/27
DRAWING SIZE: A3
THIRD ANGLE PROJECTION

molex®

0.4 BB CONN. HGT=0.8 REC ASSY EMBSTP PKG

PRODUCT CUSTOMER DRAWING

SERIES	MATERIAL NUMBER	CUSTOMER
503772	SEE CHART	GENERAL

DOCUMENT NUMBER	DOC TYPE	DOC PART	SHEET NUMBER
5037720000	PSD	000	3 OF 3

RELEASE STATUS	P1	RELEASE DATE	27.09.2016 05:11:48

FORMAT: master-lb-prod-A3
REVISION: G
DATE: 2015/12/14

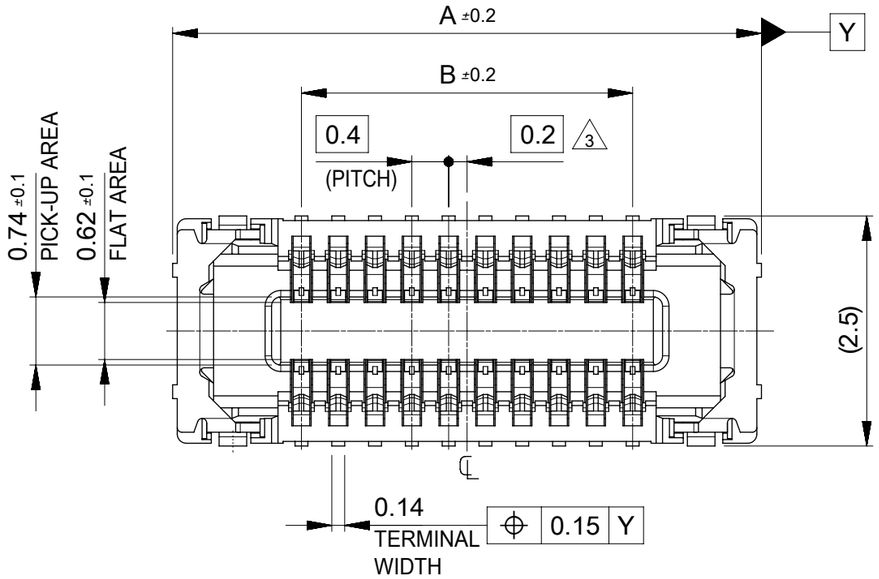

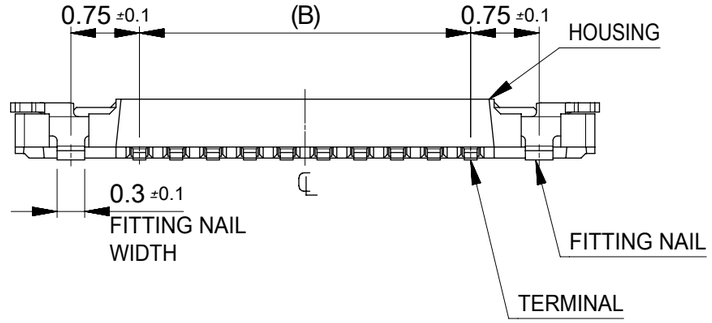

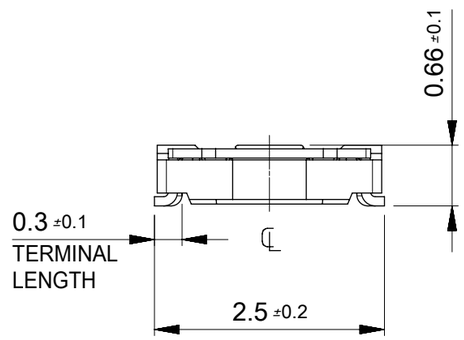

注記 NOTES

1. 使用材料 MATERIAL
   ハウジング:液晶ポリマー(LCP) UL94V-0(黒)
   HOUSING : LIQUID CRYSTAL POLYMER UL94V-0 (COLOR : BLACK)
   ターミナル : 銅合金
   TERMINAL : COPPER ALLOY
   金具 : SUS
   FITTING NAIL : STAINLESS STEEL
2. メッキ仕様 PLATING
   ターミナル TERMINAL
   金メッキ
   GOLD
   下地メッキ : ニッケルメッキ
   UNDER PLATING : NICKEL
   ※コンタクト部とテール部はニッケルメッキによって分断されている金メッキです。
   DIVIDE INTO PARTS THE GOLD PLATING OF THE CONTACT AND THE TAIL PART BY THE NICKEL PLATING.
   金具 FITTING NAIL
   金メッキ(半田付部のみ)
   GOLD (SOLDER TAIL ONLY)
   下地メッキ : ニッケルメッキ
   UNDER PLATING : NICKEL
3. (全極数/2)=偶数の場合に適用。
   APPLY FOR (CIRCUIT/2)=EVEN.
4. 嵌合相手 : 503776　シリーズ
   MATE WITH : 503776 SERIES.
5. テール及び金具の平坦度は、0.08以下。60極は0.1以下。
   TAIL AND FITTING NAIL COPLANARITY TO BE 0.08 MAXIMUM.
   TAIL AND FITTING NAIL COPLANARITY WITH 60ckt TO BE 0.1 MAXIMUM.
6. ELV and RoHS COMPLIANT

11.6	14.4	503772-6010	60
9.6	12.4	503772-5010	50
7.6	10.4	503772-4010	40
6.4	9.2	503772-3410	34
5.6	8.4	503772-3010	30
4.4	7.2	503772-2410	24
3.6	6.4	503772-2010	20
2.8	5.6	503772-1610	16
1.6	4.4	503772-1010	10
B	A	EMBOSSED PACKAGE	極 数
		オーダー番号 ORDER No.	CIRCUITS
		CONNECTOR SERIES No. : 503772	

THIS DRAWING CONTAINS INFORMATION THAT IS PROPRIETARY TO MOLEX ELECTRONIC TECHNOLOGIES, LLC AND SHOULD NOT BE USED WITHOUT WRITTEN PERMISSION

EC NO: 108729 2016/09/21
DRWN: JFURUKAWA 2016/09/27
CHK'D: TASAKAWA 2016/09/27
APPR: KMORIKAWA 2016/09/27
REV: A

GENERAL TOLERANCES (UNLESS SPECIFIED)

ANGULAR TOL ±	3.0 °
4 PLACES	± 0.03
3 PLACES	± 0.03
2 PLACES	± 0.05
1 PLACE	± 0.1
0 PLACES	± 0.2

DRAFT WHERE APPLICABLE MUST REMAIN WITHIN DIMENSIONS

DIMENSION UNITS: MM
SCALE: 15:1
DRWN BY: JFURUKAWA DATE: 2016/09/21
CHK'D BY: TASAKAWA DATE: 2016/09/27
APPR BY: KMORIKAWA DATE: 2016/09/27
DRAWING SIZE: A3
THIRD ANGLE PROJECTION

molex®

0.4 BB CONN. HGT=0.8 W=2.5 REC ASSY

PRODUCT CUSTOMER DRAWING

SERIES	MATERIAL NUMBER	CUSTOMER
503772	SEE TABLE	GENERAL

DOCUMENT NUMBER	DOC TYPE	DOC PART	SHEET NUMBER
5037721000	PSD	000	1 OF 2

RELEASE STATUS	P1	RELEASE DATE	27.09.2016 05:11:49

FORMAT: tb-prod-A3
REVISION: G
DATE: 2015/12/14

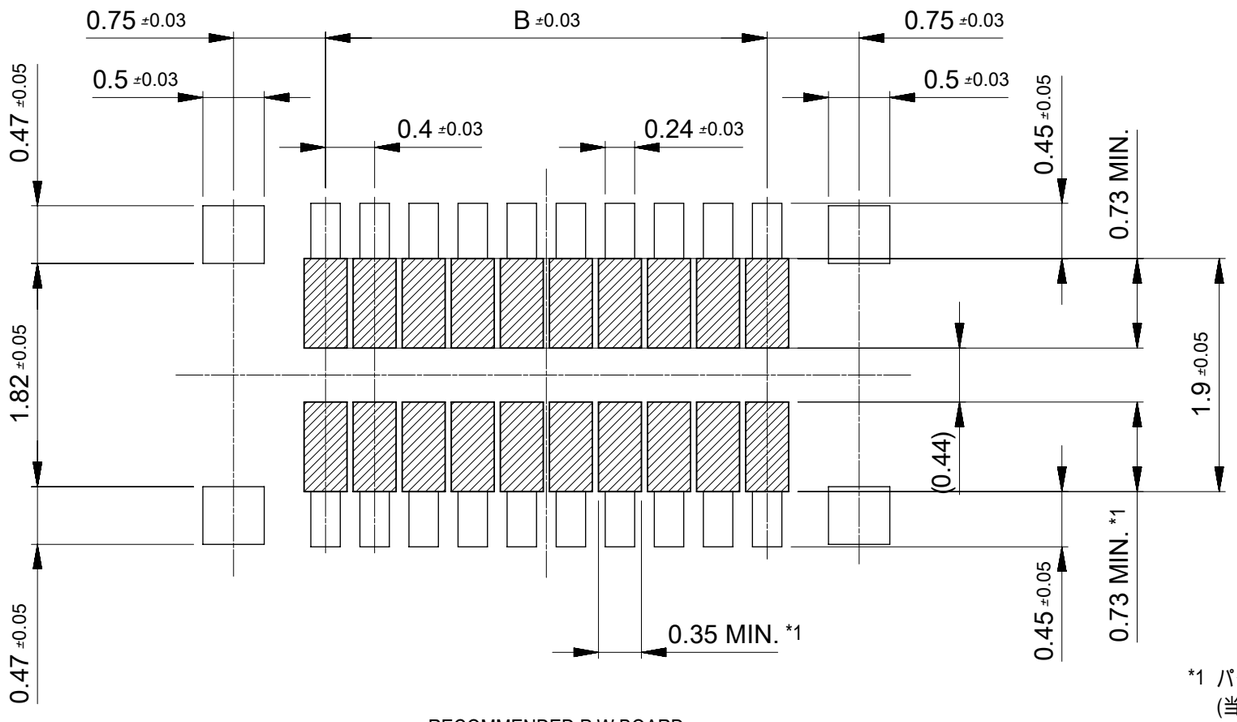

RECOMMENDED P.W.BOARD
PATTERN LAYOUT

*1 パターン引き回し、および半田禁止エリア
(当該箇所においては、これと接する回路以外の配線を禁止する。
また、接する回路を配線する場合はレジストを施し、この部分に
半田は無きこととする。)

*1 PROHIBITED AREA OF PATTERN WIRING AND SOLDER.
(FOR EACH AREA, THE WIRING THAT TOUCHES ON THE SOLDER
CAN BE ATTACHED, THEN COVERED WITH A FILM TO KEEP SOLDER OUT.)

THIS DRAWING CONTAINS INFORMATION THAT IS PROPRIETARY TO MOLEX ELECTRONIC TECHNOLOGIES, LLC AND SHOULD NOT BE USED WITHOUT WRITTEN PERMISSION

EC NO: 108729	DRWN: JFURUKAWA	2016/09/21
CHK'D: TASAKAWA		2016/09/27
APPR: KMORIKAWA		2016/09/27

GENERAL TOLERANCES (UNLESS SPECIFIED)

ANGULAR TOL ±	3.0 °
4 PLACES	± 0.03
3 PLACES	± 0.03
2 PLACES	± 0.05
1 PLACE	± 0.1
0 PLACES	± 0.2

DRAFT WHERE APPLICABLE MUST REMAIN WITHIN DIMENSIONS

REV: A

DIMENSION UNITS	MM
SCALE	20:1
DRWN BY	JFURUKAWA
DATE	2016/09/21
CHK'D BY	TASAKAWA
DATE	2016/09/27
APPR BY	KMORIKAWA
DATE	2016/09/27
DRAWING SIZE	A3
THIRD ANGLE PROJECTION	

molex®

0.4 BB CONN. HGT=0.8 W=2.5 REC ASSY

PRODUCT CUSTOMER DRAWING

SERIES	MATERIAL NUMBER	CUSTOMER
503772	SEE TABLE	GENERAL

DOCUMENT NUMBER	DOC TYPE	DOC PART	SHEET NUMBER
5037721000	PSD	000	2 OF 2

RELEASE STATUS	P1	RELEASE DATE	27.09.2016 05:11:49

FORMAT: master-tb-prod-A3
REVISION: G
DATE: 2015/12/14

Looking for pricing, stock, or lifecycle information?

Click below to explore more details on WIN SOURCE:

- View 5037726010 on WIN SOURCE
- Molex, LLC Information

Optimize Your Supply Chain with WIN SOURCE Solutions

- Global Sourcing Solution
- Obsolete Management
- Cost Control Management
- Shortage Management
- Alternative Solution
- Excess Inventory Management