THE DATASHEET OF

TS5A3166DBVR

www.win-source.net 0086-755-83957316

TS5A3166 0.9-Ω SPST Analog Switch

1 Features

- Low ON-State Resistance (0.9 Ω)
- Control Inputs Are 5.5-V Tolerant
- Low Charge Injection
- Low Total Harmonic Distortion (THD)
- 1.65-V to 5.5-V Single-Supply Operation
- Latch-Up Performance Exceeds 100 mA Per JESD 78, Class II
- ESD Performance Tested Per JESD 22
  - 2000-V Human-Body Model (A114-B, Class II)
  - 1000-V Charged-Device Model (C101)

2 Applications

- Cell Phones
- PDAs
- Portable Instrumentation
- Audio and Video Signal Routing
- Low-Voltage Data-Acquisition Systems
- Communication Circuits
- Modems
- Hard Drives
- Computer Peripherals
- Wireless Terminals and Peripherals
- Microphone Switching – Notebook Docking

3 Description

The TS5A3166 device is a single-pole single-throw (SPST) analog switch that is designed to operate from 1.65 V to 5.5 V. The device offers a low ON-state resistance. The device has excellent total harmonic distortion (THD) performance and consumes very low power. These features make this device suitable for portable audio applications.

Device Information(1)

PART NUMBER	PACKAGE	BODY SIZE (NOM)
TS5A3166	SOT-23 (5)	2.90 mm × 1.60 mm
	SC70 (5)	2.00 mm × 1.25 mm
	DSBGA (5)	1.388 mm × 0.888 mm

(1) For all available packages, see the orderable addendum at the end of the data sheet.

Simplified Schematic

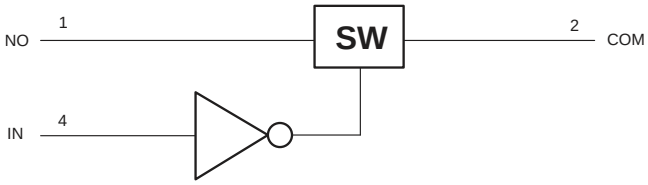

Copyright © 2018, Texas Instruments Incorporated

An IMPORTANT NOTICE at the end of this data sheet addresses availability, warranty, changes, use in safety-critical applications, intellectual property matters and other important disclaimers. PRODUCTION DATA.

Table of Contents

1 Features ... 1
2 Applications ... 1
3 Description ... 1
4 Revision History ... 2
5 Pin Configuration and Functions ... 3
6 Specifications ... 3
6.1 Absolute Maximum Ratings ... 3
6.2 ESD Ratings ... 4
6.3 Recommended Operating Conditions ... 4
6.4 Thermal Information ... 4
6.5 Electrical Characteristics for 5-V Supply ... 4
6.6 Electrical Characteristics for 3.3-V Supply ... 6
6.7 Electrical Characteristics for 2.5-V Supply ... 7
6.8 Electrical Characteristics for 1.8-V Supply ... 9
6.9 Typical Characteristics ... 11
7 Parameter Measurement Information ... 13
8 Detailed Description ... 16
8.1 Overview ... 16
8.2 Functional Block Diagram ... 16
8.3 Feature Description ... 16
8.4 Device Functional Modes ... 16
9 Application and Implementation ... 17
9.1 Application Information ... 17
9.2 Typical Application ... 18
10 Power Supply Recommendations ... 19
11 Layout ... 20
11.1 Layout Guidelines ... 20
11.2 Layout Example ... 20
12 Device and Documentation Support ... 21
12.1 Device Support ... 21
12.2 Community Resources ... 22
12.3 Trademarks ... 22
12.4 Electrostatic Discharge Caution ... 22
12.5 Glossary ... 22
13 Mechanical, Packaging, and Orderable Information ... 22

4 Revision History

NOTE: Page numbers for previous revisions may differ from page numbers in the current version.

Changes from Revision D (February 2016) to Revision E	Page
• Changed the YZP package pin numbers	3

Changes from Revision C (May 2015) to Revision D	Page
• Added "port" to COM description in *Pin Functions* table	3
• Deleted "digitial" from GND description in *Pin Functions* table	3

Changes from Revision B (September 2013) to Revision C	Page
• Added *Applications*, *Device Information* table, *Pin Functions* table, *ESD Ratings* table, *Thermal Information* table, *Typical Characteristics*, *Feature Description* section, *Device Functional Modes*, *Application and Implementation* section, *Power Supply Recommendations* section, *Layout* section, *Device and Documentation Support* section, and *Mechanical, Packaging, and Orderable Information* section.	1
• Deleted *Ordering Information* table.	1

Changes from Revision A (October 2012) to Revision B	Page
• Removed 'Isolation in Powered-Off Mode, V_+ = 0' bullet from *Features*	1
• Changed pin name from NC to NO throughout the datasheet.	1

Copyright © 2005–2018, Texas Instruments Incorporated

5 Pin Configuration and Functions

DBV and DCK Packages
5-Pin SOT-23 and SC-70
Top View

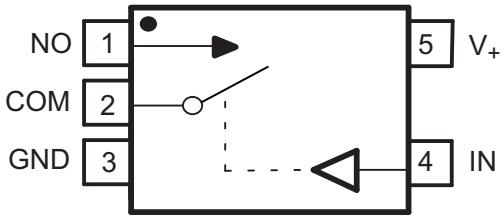

YZP Package
5-Pin DSBGA
Bottom View

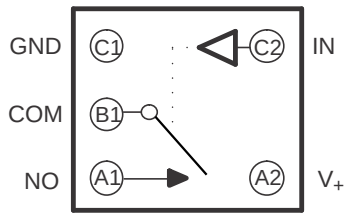

Pin Functions

PIN			TYPE	DESCRIPTION
DBC, DCK NO.	YZP NO.	NAME		
1	A1	NO	I/O	Normally opened port
2	B1	COM	I/O	Common port
3	C1	GND	GND	Ground
4	C2	IN	I	Digital control pin to connect COM to NO
5	A2	V_+	Power	Power Supply

6 Specifications

6.1 Absolute Maximum Ratings

over operating free-air temperature range (unless otherwise noted)[(1)(2)]

			MIN	MAX	UNIT
V_+	Supply voltage[(3)]		–0.5	6.5	V
V_{NO} V_{COM}	Analog voltage[(3)(4)(5)]		–0.5	V_+ + 0.5	V
I_K	Analog port diode current	V_{NO}, V_{COM} < 0	–50		mA
I_{NO} I_{COM}	ON-state switch current	V_{NO}, V_{COM} = 0 to V_+	–200	200	mA
	ON-state peak switch current[(6)]		–400	400	
V_I	Digital input voltage[(3)(4)]		–0.5	6.5	V
I_{IK}	Digital clamp current	V_I < 0	–50		mA
I_+	Continuous current through V_+			100	mA
I_{GND}	Continuous current through GND		–100		mA
T_{stg}	Storage temperature		–65	150	°C
T_j	Junction temperature			150	°C

(1) Stresses beyond those listed under *Absolute Maximum Ratings* may cause permanent damage to the device. These are stress ratings only, and functional operation of the device at these or any other conditions beyond those indicated under *Recommended Operating Conditions* is not implied. Exposure to absolute-maximum-rated conditions for extended periods may affect device reliability.
(2) The algebraic convention, whereby the most negative value is a minimum and the most positive value is a maximum
(3) All voltages are with respect to ground, unless otherwise specified.
(4) The input and output voltage ratings may be exceeded if the input and output clamp-current ratings are observed.
(5) This value is limited to 5.5 V maximum.
(6) Pulse at 1-ms duration < 10% duty cycle.

Copyright © 2005–2018, Texas Instruments Incorporated

6.2 ESD Ratings

		VALUE	UNIT
$V_{(ESD)}$ Electrostatic discharge	Human-body model (HBM), per ANSI/ESDA/JEDEC JS-001 (1)	±2000	V
	Charged-device model (CDM), per JEDEC specification JESD22-C101 (2)	±1000	

(1) JEDEC document JEP155 states that 500-V HBM allows safe manufacturing with a standard ESD control process.
(2) JEDEC document JEP157 states that 250-V CDM allows safe manufacturing with a standard ESD control process.

6.3 Recommended Operating Conditions

over operating free-air temperature range (unless otherwise noted)

		MIN	MAX	UNIT
$V_{I/O}$	Input/output voltage	0	V_+	V
V_+	Supply voltage	1.65	5.5	V
V_I	Control Input Voltage	0	5.5	V
T_A	Operating free-air temperature	–40	85	°C

6.4 Thermal Information

THERMAL METRIC (1)		TS5A3166			UNIT
		DBV (SOT)	DCK (SC-70)	YZP (DSBGA)	
		5 PINS	5 PINS	5 PINS	
$R_{\theta JA}$	Junction-to-ambient thermal resistance	206	252	132	°C/W

(1) For more information about traditional and new thermal metrics, see the *Semiconductor and IC Package Thermal Metrics* application report, SPRA953.

6.5 Electrical Characteristics for 5-V Supply

V_+ = 4.5 V to 5.5 V, T_A = –40°C to 85°C (unless otherwise noted) (1)

PARAMETER		TEST CONDITIONS		T_A	V_+	MIN	TYP	MAX	UNIT
Analog Switch									
V_{COM}, V_{NO}	Analog signal range					0		V_+	V
r_{peak}	Peak ON resistance	$0 \le V_{NO} \le V_+$, I_{COM} = –100 mA,	Switch ON, see Figure 13	25°C	4.5 V		0.8	1.1	Ω
				Full				1.2	
r_{on}	ON-state resistance	V_{NO} = 2.5 V, I_{COM} = –100 mA,	Switch ON, see Figure 13	25°C	4.5 V		0.7	0.9	Ω
				Full				1	
$r_{on(flat)}$	ON-state resistance flatness	$0 \le V_{NO} \le V_+$, I_{COM} = –100 mA,	Switch ON, see Figure 13	25°C	4.5 V		0.15		Ω
		V_{NO} = 1 V, 1.5 V, 2.5 V, I_{COM} = –100 mA,		25°C			0.09	0.15	
				Full				0.15	
$I_{NO(OFF)}$	NO OFF leakage current	V_{NO} = 1 V, V_{COM} = 4.5 V, or V_{NO} = 4.5 V, V_{COM} = 1 V,	Switch OFF, see Figure 14	25°C	5.5 V	–20	4	20	nA
				Full		–100		100	
$I_{NO(PWROFF)}$		V_{NO} = 0 to 5.5 V, V_{COM} = 5.5 V to 0,		25°C	0 V	–5	0.4	5	µA
				Full		–15		15	
$I_{COM(OFF)}$	COM OFF leakage current	V_{COM} = 1 V, V_{NO} = 4.5 V, or V_{COM} = 4.5 V, V_{NO} = 1 V,	Switch OFF, see Figure 14	25°C	5.5 V	–20	4	20	nA
				Full		–100		100	
$I_{COM(PWROFF)}$		V_{COM} = 5.5 V to 0, V_{NO} = 0 to 5.5 V,		25°C	0 V	–5	0.4	5	µA
				Full		–15		15	

(1) The algebraic convention, whereby the most negative value is a minimum and the most positive value is a maximum.

Copyright © 2005–2018, Texas Instruments Incorporated

Electrical Characteristics for 5-V Supply (continued)

V_+ = 4.5 V to 5.5 V, T_A = –40°C to 85°C (unless otherwise noted)[1]

PARAMETER		TEST CONDITIONS		T_A	V_+	MIN	TYP	MAX	UNIT
$I_{NO(ON)}$	NO ON leakage current	V_{NO} = 1 V, V_{COM} = Open, or V_{NO} = 4.5 V, V_{COM} = Open,	Switch ON, see Figure 15	25°C	5.5 V	–2	0.3	2	nA
				Full		–20		20	
$I_{COM(ON)}$	COM ON leakage current	V_{COM} = 1 V, V_{NO} = Open, or V_{COM} = 4.5 V, V_{NO} = Open,	Switch ON, see Figure 15	25°C	5.5 V	–2	0.3	2	nA
				Full		–20		20	
Digital Control Inputs (IN)									
V_{IH}	Input logic high			Full		2.4		5.5	V
V_{IL}	Input logic low			Full		0		0.8	V
I_{IH}, I_{IL}	Input leakage current	V_I = 5.5 V or 0		25°C	5.5 V	–2	0.3	2	nA
				Full		–20		20	
Dynamic									
t_{ON}	Turnon time	V_{COM} = V_+, R_L = 50 Ω,	C_L = 35 pF, see Figure 17	25°C	5 V	2.5	4.5	7	ns
				Full	4.5 V to 5.5 V	1.5		7.5	
t_{OFF}	Turnoff time	V_{COM} = V_+, R_L = 50 Ω,	C_L = 35 pF, see Figure 17	25°C	5 V	6	9	11.5	ns
				Full	4.5 V to 5.5 V	4		12.5	
Q_C	Charge injection	V_{GEN} = 0, R_{GEN} = 0 ,	C_L = 1 nF, see Figure 20	25°C	5 V		1		pC
$C_{NO(OFF)}$	NO OFF capacitance	V_{NO} = V_+ or GND, Switch OFF,	See Figure 16	25°C	5 V		19		pF
$C_{COM(OFF)}$	COM OFF capacitance	V_{COM} = V_+ or GND, Switch OFF,	See Figure 16	25°C	5 V		18		pF
$C_{NO(ON)}$	NO ON capacitance	V_{NO} = V_+ or GND, Switch ON,	See Figure 16	25°C	5 V		35.5		pF
$C_{COM(ON)}$	COM ON capacitance	V_{COM} = V_+ or GND, Switch ON,	See Figure 16	25°C	5 V		35.5		pF
C_I	Digital input capacitance	V_I = V_+ or GND,	See Figure 16	25°C	5 V		2		pF
BW	Bandwidth	R_L = 50 Ω, Switch ON,	See Figure 18	25°C	5 V		200		MHz
O_{ISO}	OFF isolation	R_L = 50 Ω, f = 1 MHz,	Switch OFF, see Figure 19	25°C	5 V		–64		dB
THD	Total harmonic distortion	R_L = 600 Ω, C_L = 50 pF,	f = 20 Hz to 20 kHz, see Figure 21	25°C	5 V		0.005%		
Supply									
I_+	Positive supply current	V_I = V_+ or GND,	Switch ON or OFF	25°C	5.5 V		0.01	0.1	µA
				Full				0.5	

Copyright © 2005–2018, Texas Instruments Incorporated

6.6 Electrical Characteristics for 3.3-V Supply

V_+ = 3 V to 3.6 V, T_A = –40°C to 85°C (unless otherwise noted)(1)

PARAMETER		TEST CONDITIONS		T_A	V_+	MIN	TYP	MAX	UNIT
Analog Switch									
V_{COM}, V_{NO}	Analog signal range					0		V_+	V
r_{peak}	Peak ON resistance	0 ≤ V_{NO} ≤ V_+, I_{COM} = –100 mA,	Switch ON, see Figure 13	25°C	3 V		1.1	1.5	Ω
				Full				1.7	
r_{on}	ON-state resistance	V_{NO} = 2 V, I_{COM} = –100 mA,	Switch ON, see Figure 13	25°C	3 V		1	1.4	Ω
				Full				1.5	
$r_{on(flat)}$	ON-state resistance flatness	0 ≤ V_{NO} ≤ V_+, I_{COM} = –100 mA,	Switch ON, see Figure 13	25°C	3 V		0.3		Ω
		V_{NO} = 2 V, 0.8 V, I_{COM} = –100 mA,		25°C			0.09	0.15	
				Full				0.15	
$I_{NO(OFF)}$	NO OFF leakage current	V_{NO} = 1 V, V_{COM} = 3 V, or V_{NO} = 3 V, V_{COM} = 1 V,	Switch OFF, see Figure 14	25°C	3.6 V	–2	0.5	2	nA
				Full		–20		20	
$I_{NO(PWROFF)}$		V_{NO} = 0 to 3.6 V, V_{COM} = 3.6 V to 0,		25°C	0 V	–1	0.1	1	µA
				Full		–5		5	
$I_{COM(OFF)}$	COM OFF leakage current	V_{COM} = 1 V, V_{NO} = 3 V, or V_{COM} = 3 V, V_{NO} = 1 V,	Switch OFF, see Figure 14	25°C	3.6 V	–2	0.5	2	nA
				Full		–20		20	
$I_{COM(PWROFF)}$		V_{COM} = 3.6 V to 0, V_{NO} = 0 to 3.6 V,		25°C	0 V	–1	0.1	1	µA
				Full		–5		5	
$I_{NO(ON)}$	NO ON leakage current	V_{NO} = 1 V, V_{COM} = Open, or V_{NO} = 3 V, V_{COM} = Open,	Switch ON, see Figure 15	25°C	3.6 V	–2	0.2	2	nA
				Full		–20		20	
$I_{COM(ON)}$	COM ON leakage current	V_{COM} = 1 V, V_{NO} = Open, or V_{COM} = 3 V, V_{NO} = Open,	Switch ON, see Figure 15	25°C	3.6 V	–2	0.2	2	nA
				Full		–20		20	
Digital Control Inputs (IN)									
V_{IH}	Input logic high			Full		2		5.5	V
V_{IL}	Input logic low			Full		0		0.8	V
I_{IH}, I_{IL}	Input leakage current	V_I = 5.5 V or 0		25°C	3.6 V	–2	0.3	2	nA
				Full		–20		20	
Dynamic									
t_{ON}	Turnon time	V_{COM} = V_+, R_L = 50 Ω,	C_L = 35 pF, see Figure 17	25°C	3.3 V	2	5	10	ns
				Full	3 V to 3.6 V	1.5		11	
t_{OFF}	Turnoff time	V_{COM} = V_+, R_L = 50 Ω,	C_L = 35 pF, see Figure 17	25°C	3.3 V	6.5	9	12	ns
				Full	3 V to 3.6 V	4		13	
Q_C	Charge injection	V_{GEN} = 0, R_{GEN} = 0,	C_L = 1 nF, see Figure 21	25°C	3.3 V		1		pC
$C_{NO(OFF)}$	NO OFF capacitance	V_{NO} = V_+ or GND, Switch OFF,	See Figure 16	25°C	3.3 V		19		pF
$C_{COM(OFF)}$	COM OFF capacitance	V_{COM} = V_+ or GND, Switch OFF,	See Figure 16	25°C	3.3 V		18		pF
$C_{NO(ON)}$	NO ON capacitance	V_{NO} = V_+ or GND, Switch ON,	See Figure 16	25°C	3.3 V		36		pF
$C_{COM(ON)}$	COM ON capacitance	V_{COM} = V_+ or GND, Switch ON,	See Figure 16	25°C	3.3 V		36		pF

(1) The algebraic convention, whereby the most negative value is a minimum and the most positive value is a maximum.

Copyright © 2005–2018, Texas Instruments Incorporated

Electrical Characteristics for 3.3-V Supply (continued)

V_+ = 3 V to 3.6 V, T_A = –40°C to 85°C (unless otherwise noted)(1)

PARAMETER		TEST CONDITIONS		T_A	V_+	MIN	TYP	MAX	UNIT
C_I	Digital input capacitance	V_I = V_+ or GND,	See Figure 16	25°C	3.3 V		2		pF
BW	Bandwidth	R_L = 50 Ω, Switch ON,	See Figure 18	25°C	3.3 V		200		MHz
O_{ISO}	OFF isolation	R_L = 50 Ω, f = 1 MHz,	Switch OFF, see Figure 19	25°C	3.3 V		–64		dB
THD	Total harmonic distortion	R_L = 600 Ω, C_L = 50 pF,	f = 20 Hz to 20 kHz, see Figure 21	25°C	3.3 V		0.01%		
Supply									
I_+	Positive supply current	V_I = V_+ or GND,	Switch ON or OFF	25°C	3.6 V		0.01	0.1	µA
				Full				0.25	

6.7 Electrical Characteristics for 2.5-V Supply

V_+ = 2.3 V to 2.7 V, T_A = –40°C to 85°C (unless otherwise noted)(1)

PARAMETER		TEST CONDITIONS		T_A	V_+	MIN	TYP	MAX	UNIT
Analog Switch									
V_{COM}, V_{NO}	Analog signal range				2.3 V	0		V_+	V
r_{peak}	Peak ON resistance	0 ≤ V_{NO} ≤ V_+, I_{COM} = –100 mA,	Switch ON, see Figure 13	25°C	2.3 V		1.8	2.4	Ω
				Full				2.6	
r_{on}	ON-state resistance	V_{NO} = 2 V, I_{COM} = –100 mA,	Switch ON, see Figure 13	25°C	2.3 V		1.2	2.1	Ω
				Full				2.4	
$r_{on(flat)}$	ON-state resistance flatness	0 ≤ V_{NO} ≤ V_+, I_{COM} = –100 mA,	Switch ON, see Figure 13	25°C	2.3 V		0.7		Ω
		V_{NO} = 2 V, 0.8 V, I_{COM} = –100 mA,		25°C			0.4	0.6	
				Full				0.6	
$I_{NO(OFF)}$	NO OFF leakage current	V_{NO} = 1 V, V_{COM} = 3 V, or V_{NO} = 3 V, V_{COM} = 1 V,	Switch OFF, see Figure 14	25°C	2.7 V	–5	0.3	5	nA
				Full		–50		50	
$I_{NO(PWROFF)}$		V_{NO} = 0 to 3.6 V, V_{COM} = 3.6 V to 0,		25°C	0 V	–2	0.05	2	µA
				Full		–15		15	
$I_{COM(OFF)}$	COM OFF leakage current	V_{COM} = 1 V, V_{NO} = 3 V, or V_{COM} = 3 V, V_{NO} = 1 V,	Switch OFF, see Figure 14	25°C	2.7 V	–5	0.3	5	nA
				Full		–50		50	
$I_{COM(PWROFF)}$		V_{COM} = 3.6 V to 0, V_{NO} = 0 to 3.6 V,		25°C	0 V	–2	0.05	2	µA
				Full		–15		15	
$I_{NO(ON)}$	NO ON leakage current	V_{NO} = 1 V, V_{COM} = Open, or V_{NO} = 3 V, V_{COM} = Open,	Switch ON, see Figure 15	25°C	2.7 V	–2	0.3	2	nA
				Full		–20		20	
$I_{COM(ON)}$	COM ON leakage current	V_{COM} = 1 V, V_{NO} = Open, or V_{COM} = 3 V, V_{NO} = Open,	Switch ON, see Figure 15	25°C	2.7 V	–2	0.3	2	nA
				Full		–20		20	
Digital Control Inputs (IN1, IN2)									
V_{IH}	Input logic high			Full		1.8		5.5	V
V_{IL}	Input logic low			Full		0		0.6	V

(1) The algebraic convention, whereby the most negative value is a minimum and the most positive value is a maximum.

Copyright © 2005–2018, Texas Instruments Incorporated

Electrical Characteristics for 2.5-V Supply (continued)

V_+ = 2.3 V to 2.7 V, T_A = –40°C to 85°C (unless otherwise noted)[1]

PARAMETER		TEST CONDITIONS		T_A	V_+	MIN	TYP	MAX	UNIT
I_{IH}, I_{IL}	Input leakage current	V_I = 5.5 V or 0		25°C	2.7 V	–2	0.3	2	nA
				Full		–20		20	
Dynamic									
t_{ON}	Turnon time	V_{COM} = V_+, R_L = 50 Ω,	C_L = 35 pF, see Figure 17	25°C	2.5 V	2	6	10	ns
				Full	2.3 V to 2.7 V	1		12	
t_{OFF}	Turnoff time	V_{COM} = V_+, R_L = 50 Ω,	C_L = 35 pF, see Figure 17	25°C	2.5 V	4.5	8	10.5	ns
				Full	2.3 V to 2.7 V	3		15	
Q_C	Charge injection	V_{GEN} = 0, R_{GEN} = 0,	C_L = 1 nF, see Figure 21	25°C	2.5 V		4		pC
$C_{NO(OFF)}$	NO OFF capacitance	V_{NO} = V_+ or GND, Switch OFF,	See Figure 16	25°C	2.5 V		19.5		pF
$C_{COM(OFF)}$	COM OFF capacitance	V_{COM} = V_+ or GND, Switch OFF,	See Figure 16	25°C	2.5 V		18.5		pF
$C_{NO(ON)}$	NO ON capacitance	V_{NO} = V_+ or GND, Switch ON,	See Figure 16	25°C	2.5 V		36.5		pF
$C_{COM(ON)}$	COM ON capacitance	V_{COM} = V_+ or GND, Switch ON,	See Figure 16	25°C	2.5 V		36.5		pF
C_I	Digital input capacitance	V_I = V_+ or GND,	See Figure 16	25°C	2.5 V		2		pF
BW	Bandwidth	R_L = 50 Ω, Switch ON,	See Figure 18	25°C	2.5 V		150		MHz
O_{ISO}	OFF isolation	R_L = 50 Ω, f = 1 MHz,	Switch OFF, see Figure 19	25°C	2.5 V		–62		dB
THD	Total harmonic distortion	R_L = 600 Ω, C_L = 50 pF,	f = 20 Hz to 20 kHz, see Figure 21	25°C	2.5 V		0.02%		
Supply									
I_+	Positive supply current	V_I = V_+ or GND,	Switch ON or OFF	25°C	2.7 V		0.001	0.02	µA
				Full				0.25	

Copyright © 2005–2018, Texas Instruments Incorporated

6.8 Electrical Characteristics for 1.8-V Supply(1)

V_+ = 1.65 V to 1.95 V, T_A = –40°C to 85°C (unless otherwise noted))

PARAMETER		TEST CONDITIONS		T_A	V_+	MIN	TYP	MAX	UNIT
Analog Switch									
V_{COM}, V_{NO}	Analog signal range					0		V_+	V
r_{peak}	Peak ON resistance	0 ≤ V_{NO} ≤ V_+, I_{COM} = –100 mA,	Switch ON, see Figure 13	25°C	1.65 V		4.2	25	Ω
				Full				30	
r_{on}	ON-state resistance	V_{NO} = 2 V, I_{COM} = –100 mA,	Switch ON, see Figure 13	25°C	1.65 V		1.6	3.9	Ω
				Full				4.0	
$r_{on(flat)}$	ON-state resistance flatness	0 ≤ V_{NO} ≤ V_+, I_{COM} = –100 mA,	Switch ON, see Figure 13	25°C	1.65 V		2.8		Ω
		V_{NO} = 2 V, 0.8 V, I_{COM} = –100 mA,		25°C			4.1	22	
				Full				27	
$I_{NO(OFF)}$	NO OFF leakage current	V_{NO} = 1 V, V_{COM} = 3 V, or V_{NO} = 3 V, V_{COM} = 1 V,	Switch OFF, see Figure 14	25°C	1.95 V	–5		5	nA
				Full		–50		50	
$I_{NO(PWROFF)}$		V_{NO} = 0 to 3.6 V, V_{COM} = 3.6 V to 0,		25°C	0 V	–2		2	µA
				Full		–10		10	
$I_{COM(OFF)}$	COM OFF leakage current	V_{COM} = 1 V, V_{NO} = 3 V, or V_{COM} = 3 V, V_{NO} = 1 V,	Switch OFF, see Figure 14	25°C	1.95 V	–5		5	nA
				Full		–50		50	
$I_{COM(PWROFF)}$		V_{COM} = 0 to 3.6 V, V_{NO} = 3.6 V to 0,		25°C	0 V	–2		2	µA
				Full		–10		10	
$I_{NO(ON)}$	NO ON leakage current	V_{NO} = 1 V, V_{COM} = Open, or V_{NO} = 3 V, V_{COM} = Open,	Switch ON, see Figure 15	25°C	1.95 V	–2		2	nA
				Full		–20		20	
$I_{COM(ON)}$	COM ON leakage current	V_{COM} = 1 V, V_{NO} = Open, or V_{COM} = 3 V, V_{NO} = Open,	Switch ON, see Figure 15	25°C	1.95 V	–2		2	nA
				Full		–20		20	
Digital Control Inputs (IN1, IN2)									
V_{IH}	Input logic high			Full		1.5		5.5	V
V_{IL}	Input logic low			Full		0		0.6	V
I_{IH}, I_{IL}	Input leakage current	V_I = 5.5 V or 0		25°C	1.95 V	–2	0.3	2	nA
				Full		–20		20	
Dynamic									
t_{ON}	Turnon time	V_{COM} = V_+, R_L = 50 Ω,	C_L = 35 pF, see Figure 17	25°C	1.8 V	3	9	18	ns
				Full	1.65 V to 1.95 V	1		20	
t_{OFF}	Turnoff time	V_{COM} = V_+, R_L = 50 Ω,	C_L = 35 pF, see Figure 17	25°C	1.8 V	5	10	15.5	ns
				Full	1.65 V to 1.95 V	4		18.5	
Q_C	Charge injection	V_{GEN} = 0, R_{GEN} = 0,	C_L = 1 nF, see Figure 21	25°C	1.8 V		2		pC
$C_{NO(OFF)}$	NO OFF capacitance	V_{NO} = V_+ or GND, Switch OFF,	See Figure 16	25°C	1.8 V		19.5		pF
$C_{COM(OFF)}$	COM OFF capacitance	V_{COM} = V_+ or GND, Switch OFF,	See Figure 16	25°C	1.8 V		18.5		pF

(1) The algebraic convention, whereby the most negative value is a minimum and the most positive value is a maximum.

Electrical Characteristics for 1.8-V Supply[(1)] (continued)

V_+ = 1.65 V to 1.95 V, T_A = –40°C to 85°C (unless otherwise noted))

PARAMETER		TEST CONDITIONS		T_A	V_+	MIN	TYP	MAX	UNIT
$C_{NO(ON)}$	NO ON capacitance	V_{NO} = V_+ or GND, Switch ON,	See Figure 16	25°C	1.8 V		36.5		pF
$C_{COM(ON)}$	COM ON capacitance	V_{COM} = V_+ or GND, Switch ON,	See Figure 16	25°C	1.8 V		36.5		pF
C_I	Digital input capacitance	V_I = V_+ or GND,	See Figure 16	25°C	1.8 V		2		pF
BW	Bandwidth	R_L = 50 Ω, Switch ON,	See Figure 18	25°C	1.8 V		150		MHz
O_{ISO}	OFF isolation	R_L = 50 Ω, f = 1 MHz,	Switch OFF, see Figure 19	25°C	1.8 V		–62		dB
THD	Total harmonic distortion	R_L = 600 Ω, C_L = 50 pF,	f = 20 Hz to 20 kHz see Figure 21	25°C	1.8 V		0.055 %		
Supply									
I_+	Positive supply current	V_I = V_+ or GND,	Switch ON or OFF	25°C	1.95 V		0.001	0.01	µA
				Full				0.15	

Copyright © 2005–2018, Texas Instruments Incorporated

6.9 Typical Characteristics

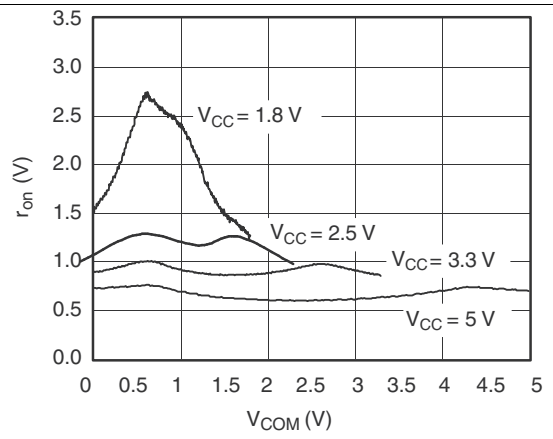

Figure 1. r_{on} vs V_{COM}

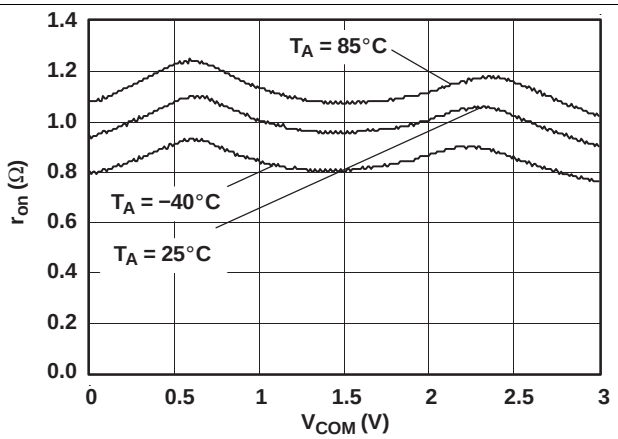

Figure 2. r_{on} vs V_{COM} (V_+ = 3 V)

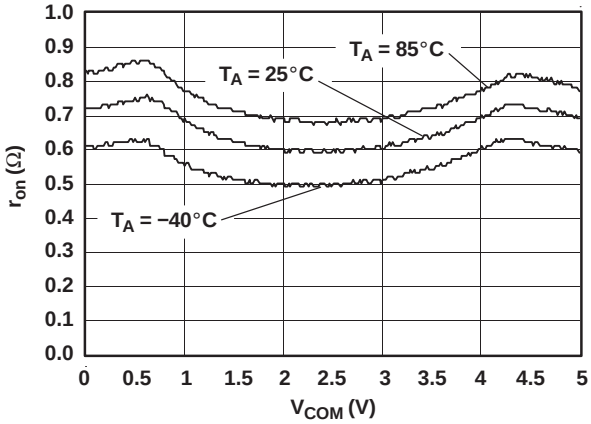

Figure 3. r_{on} vs V_{COM} (V_+ = 5 V)

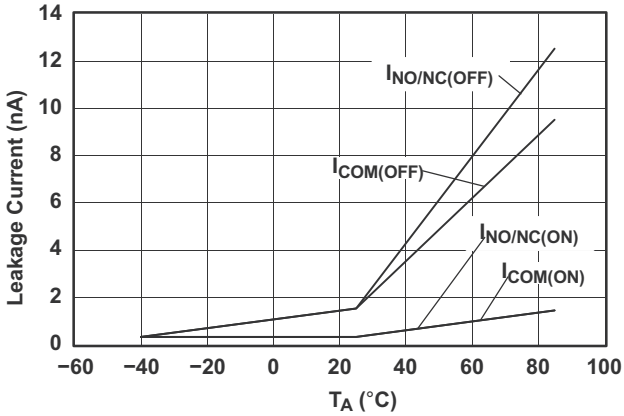

Figure 4. Leakage Current vs Temperature (V_+ = 5.5 V)

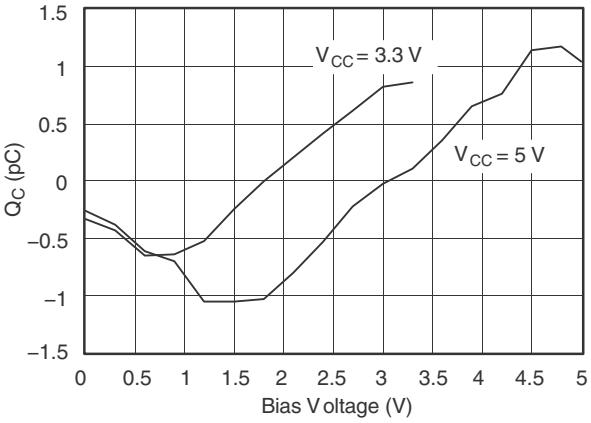

Figure 5. Charge Injection (Q_C) vs V_{COM}

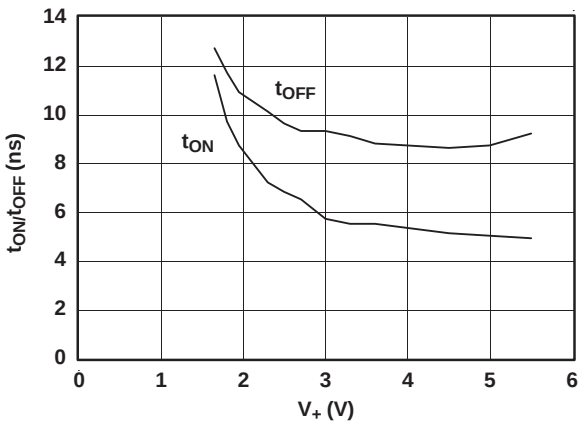

Figure 6. t_{ON} and t_{OFF} vs Supply Voltage

Typical Characteristics (continued)

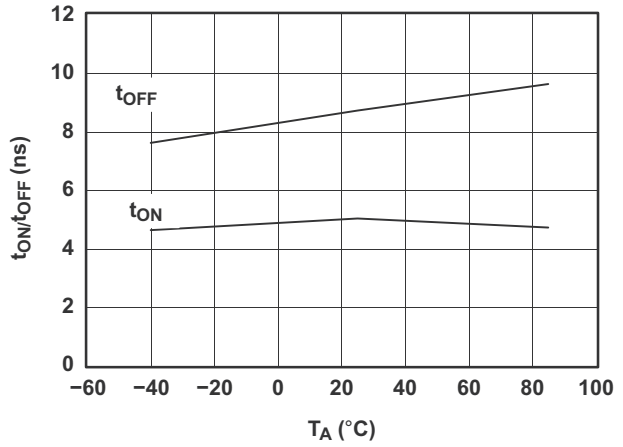

Figure 7. t_{ON} and t_{OFF} vs Temperature (V_+ = 5 V)

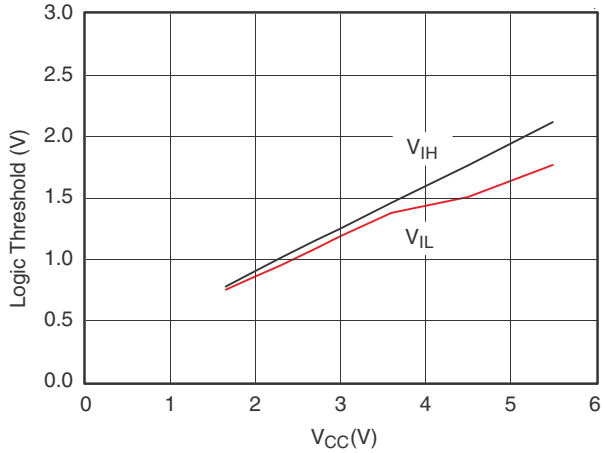

Figure 8. Logic Threshold vs V_+

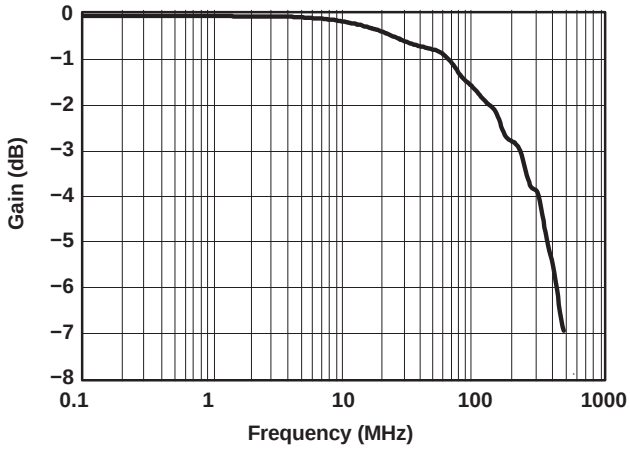

Figure 9. Gain vs Frequency (V_+ = 5 V)

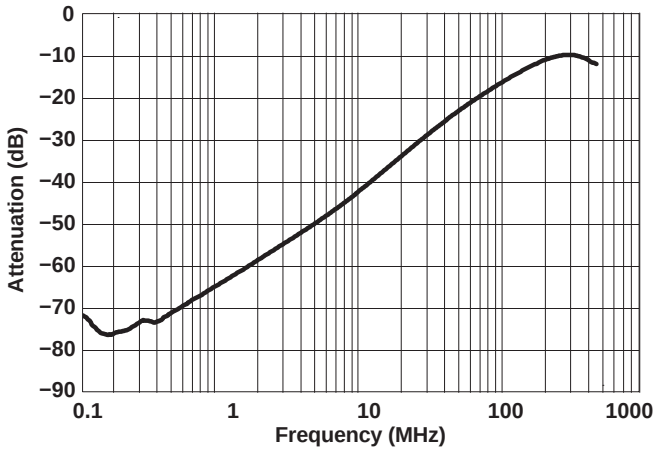

Figure 10. OFF Isolation vs Frequency (V_+ = 5 V)

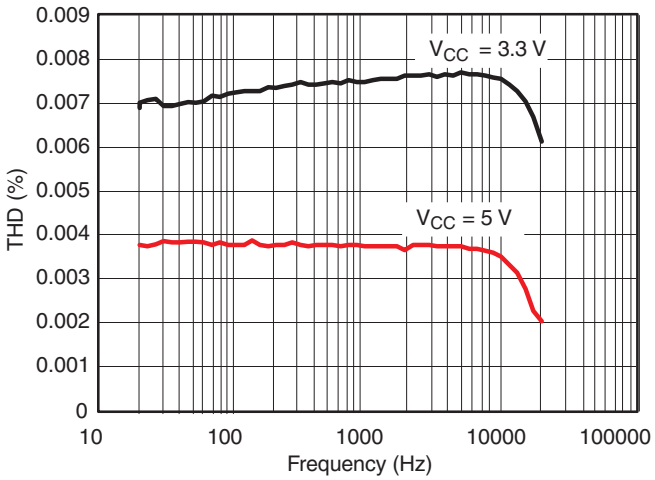

Figure 11. Total Harmonic Distortion vs Frequency (V_+ = 5 V)

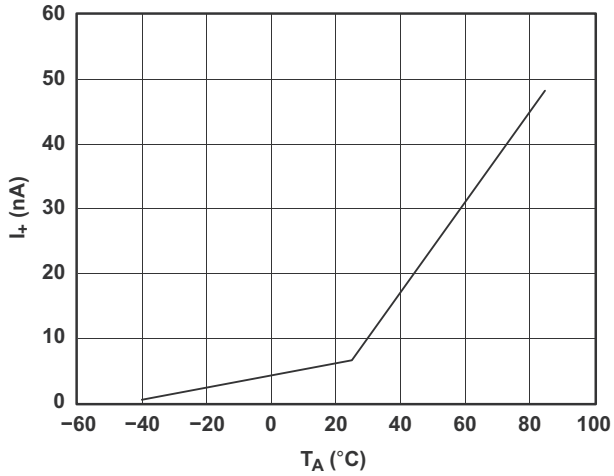

Figure 12. Power-Supply Current vs Temperature (V_+ = 5 V)

Copyright © 2005–2018, Texas Instruments Incorporated

7 Parameter Measurement Information

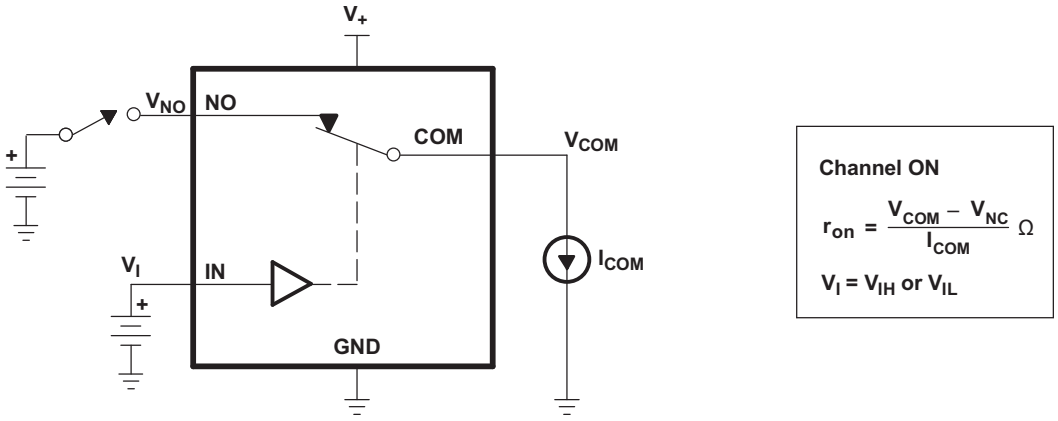

Figure 13. ON-State Resistance (r_{on})

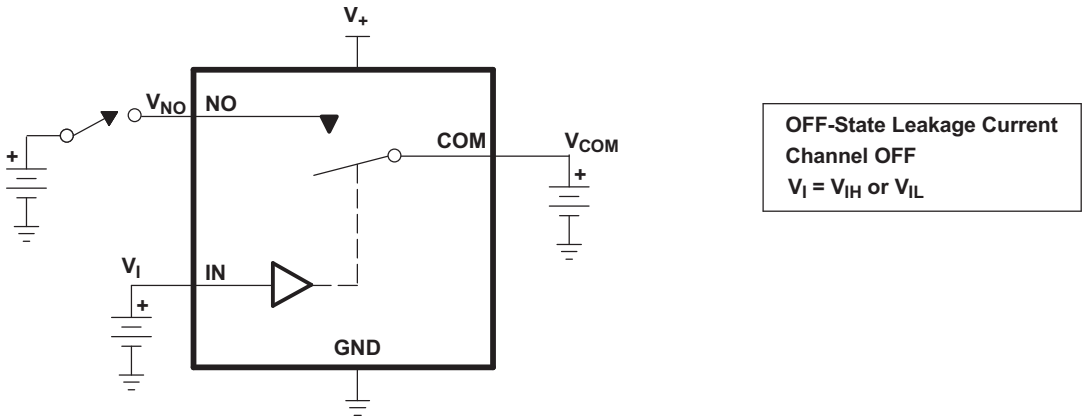

Figure 14. OFF-State Leakage Current ($I_{COM(OFF)}$, $I_{NO(OFF)}$, $I_{COM(PWROFF)}$, $I_{NO(PWR(FF)}$)

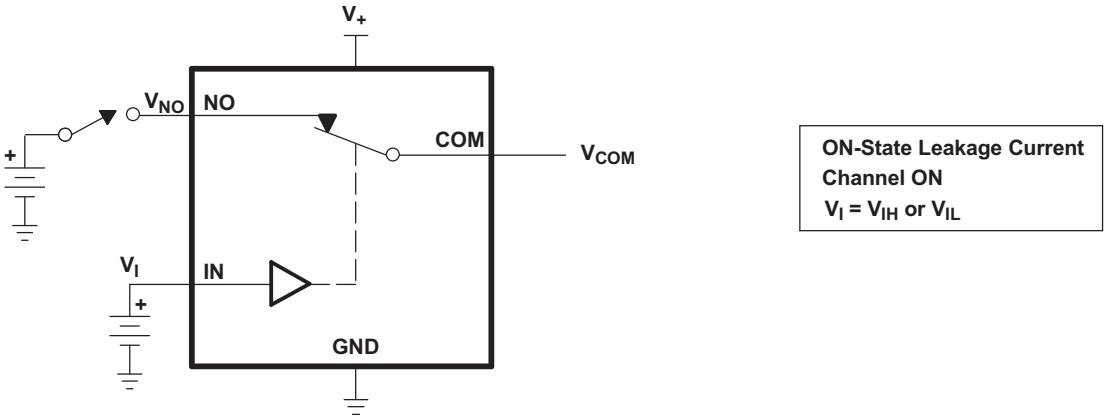

Figure 15. ON-State Leakage Current ($I_{COM(ON)}$, $I_{NO(ON)}$)

Parameter Measurement Information (continued)

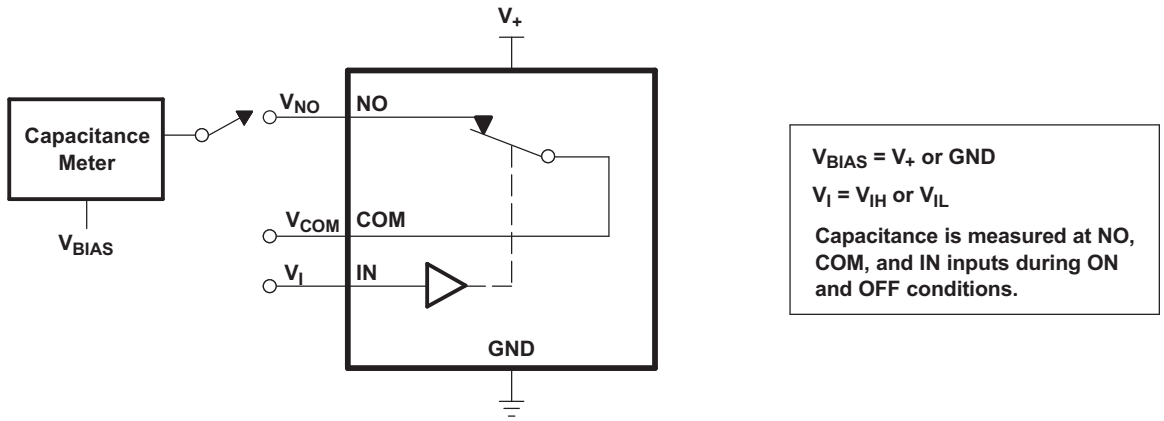

Figure 16. Capacitance (C_I, $C_{COM(OFF)}$, $C_{COM(ON)}$, $C_{NO(OFF)}$, $C_{NO(ON)}$)

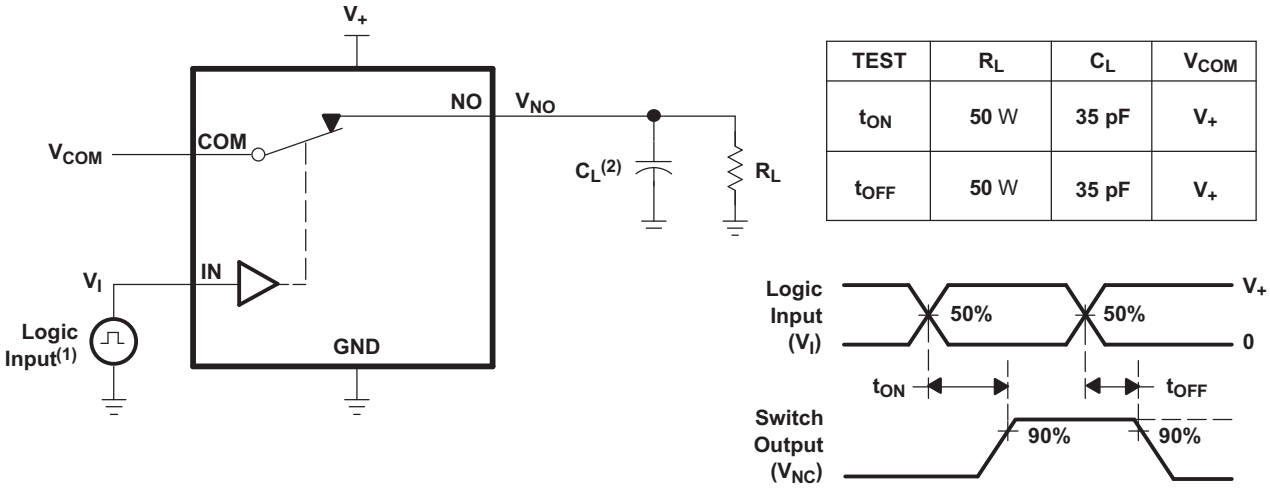

TEST	R_L	C_L	V_{COM}
t_{ON}	50 W	35 pF	V_+
t_{OFF}	50 W	35 pF	V_+

(1) All input pulses are supplied by generators having the following characteristics: PRR ≤ 10 MHz, Z_O = 50 Ω, t_r < 5 ns, t_f < 5 ns.

(2) C_L includes probe and jig capacitance.

Figure 17. Turnon (t_{ON}) and Turnoff Time (t_{OFF})

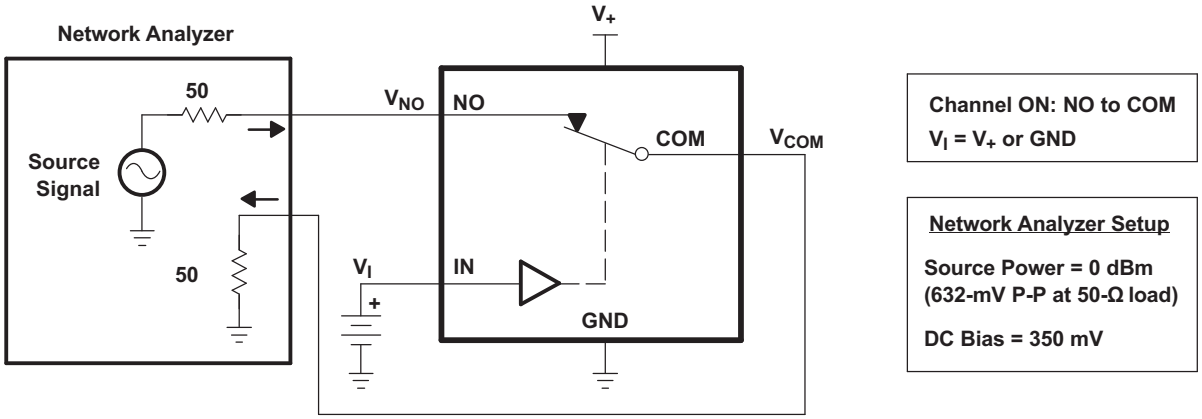

Figure 18. Bandwidth (BW)

Copyright © 2005–2018, Texas Instruments Incorporated

Parameter Measurement Information (continued)

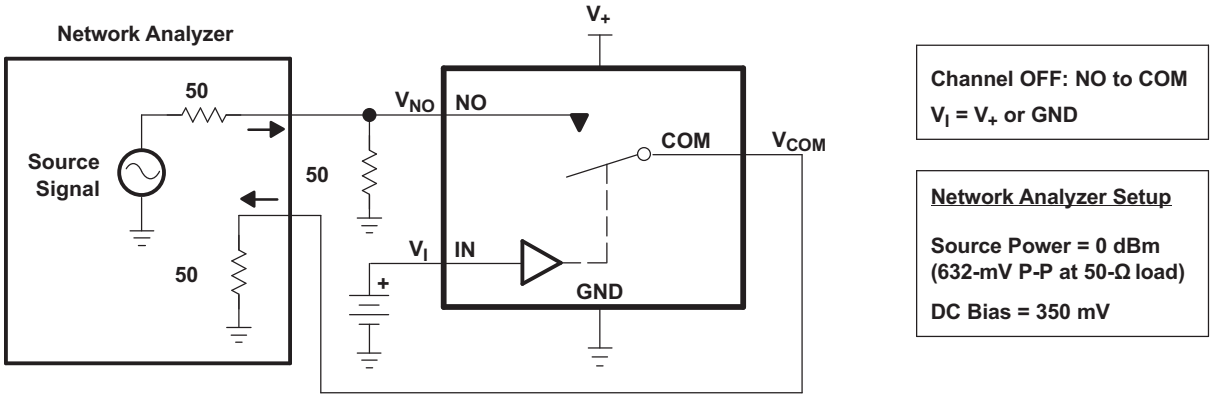

Figure 19. OFF Isolation (O_{ISO})

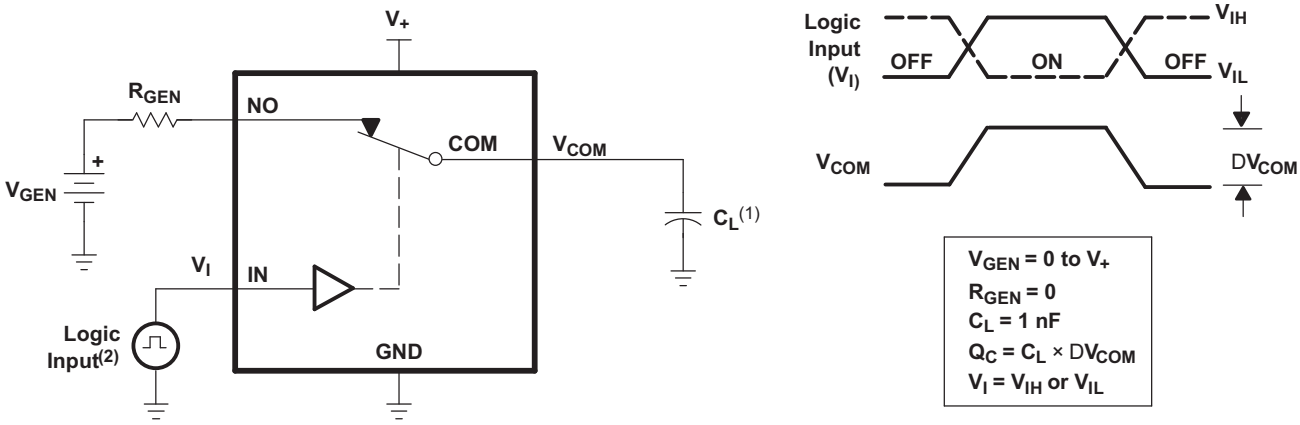

(1) C_L includes probe and jig capacitance.

(2) All input pulses are supplied by generators having the following characteristics: PRR ≤ 10 MHz, Z_O = 50 Ω, t_r < 5 ns, t_f < 5 ns.

Figure 20. Charge Injection (Q_C)

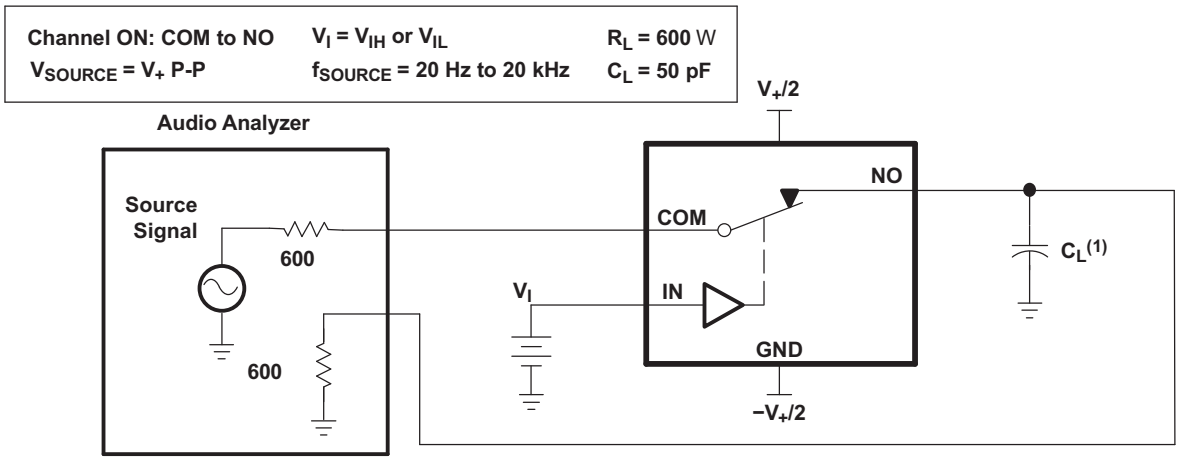

(1) C_L includes probe and jig capacitance.

Figure 21. Total Harmonic Distortion (THD)

8 Detailed Description

8.1 Overview

The TS5A3166 is a single-pole single-throw (SPST) analog switch that is designed to operate from 1.65 V to 5.5 V. The device offers a low ON-state resistance. The device has excellent total harmonic distortion (THD) performance and consumes very low power. These features make this device suitable for portable audio applications.

8.2 Functional Block Diagram

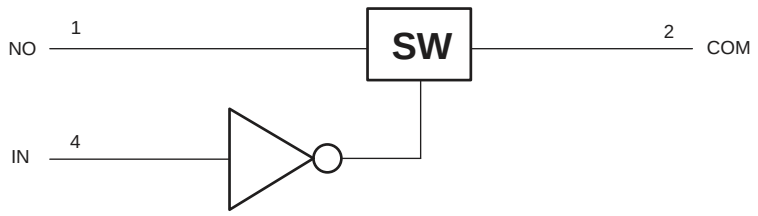

Copyright © 2018, Texas Instruments Incorporated

8.3 Feature Description

The low ON-state resistance, ON-state resistance matching, and charge injection in the TS5A3166 make this switch an excellent choice for analog signals that require minimal distortion. In addition, the low THD allows audio signals to be preserved more clearly as they pass through the device.

The 1.65-V to 5.5-V operation allows compatibility with more logic levels, and the bidirectional I/Os can pass analog signals from 0 V to V_+ with low distortion.

8.4 Device Functional Modes

Table 1. Function Table

IN	NO TO COM, COM TO NO
L	OFF
H	ON

Copyright © 2005–2018, Texas Instruments Incorporated

9 Application and Implementation

NOTE

Information in the following applications sections is not part of the TI component specification, and TI does not warrant its accuracy or completeness. TI's customers are responsible for determining suitability of components for their purposes. Customers should validate and test their design implementation to confirm system functionality.

9.1 Application Information

SPST analog switch is a basic component that could be used in any electrical system design. Figure 22 and Figure 23 are some basic applications that utilize the TS5A3166.

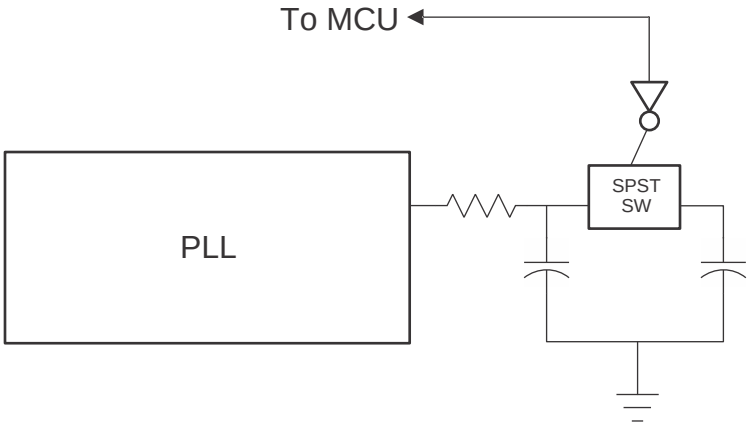

Copyright © 2018, Texas Instruments Incorporated

Figure 22. Improved Lock Time Circuit Simplified Block Diagram

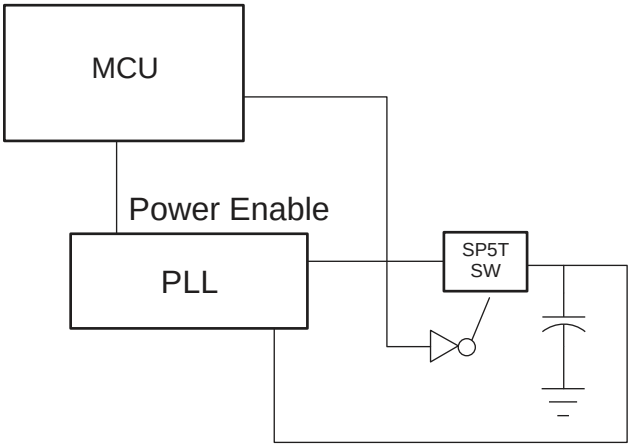

Copyright © 2018, Texas Instruments Incorporated

Figure 23. PLL Improved Power Consumption Simplified Block Diagram

9.2 Typical Application

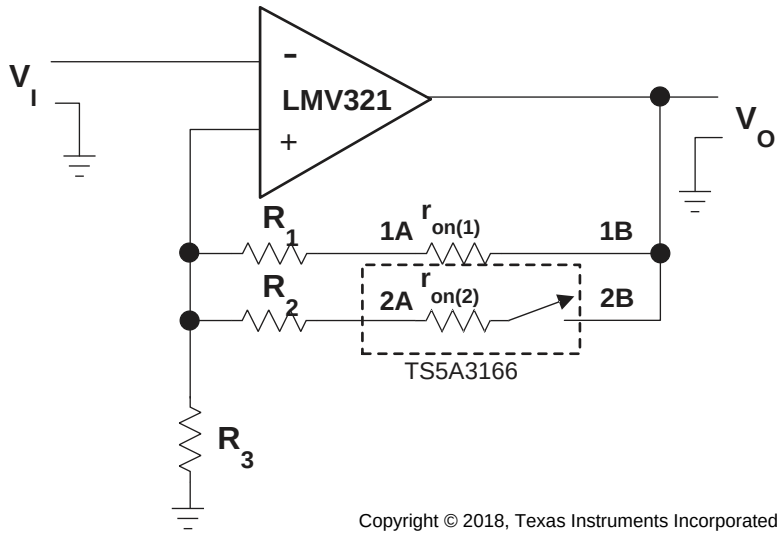

Figure 24. Gain-Control Circuit for Operational Amplifier

9.2.1 Design Requirements

By choosing values of R1 and R2, such that Rx >> $r_{on(x)}$, r_{on} of TS5A3166 can be ignored. The gain of operational amplifier can be calculated as follow:

$$Vo / VI = 1 + R|| / R3 \quad (1)$$

$$R|| = (R1 + r_{on(1)}) \,||\, (R2 + r_{on(2)}) \quad (2)$$

9.2.2 Detailed Design Procedure

Place a switch in series with the input of the operational amplifier. Since the operational amplifier input impedance is very large, a switch on $r_{on(1)}$ is irrelevant.

9.2.3 Application Curves

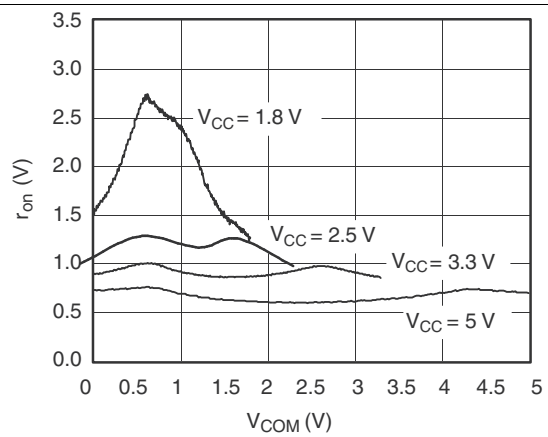

Figure 25. r_{on} vs V_{COM}

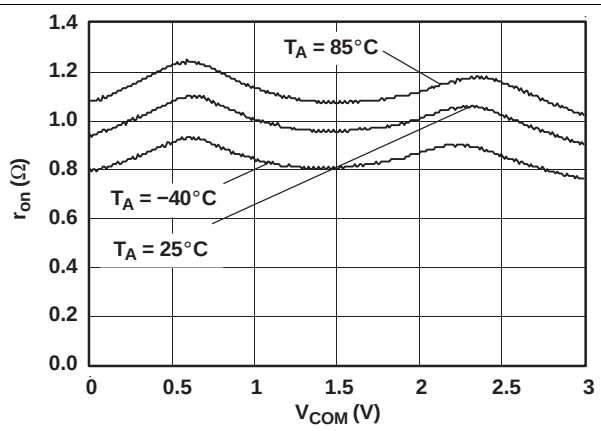

Figure 26. r_{on} vs V_{COM} (V_+ = 3 V)

Copyright © 2005–2018, Texas Instruments Incorporated

Typical Application (continued)

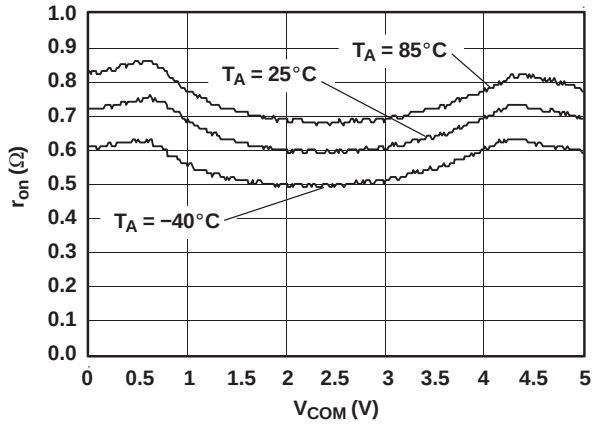

Figure 27. r_{on} vs V_{COM} (V_+ = 5 V)

10 Power Supply Recommendations

The power supply can be any voltage between the minimum and maximum supply voltage rating located in the *Recommended Operating Conditions*.

Each V_{CC} terminal should have a good bypass capacitor to prevent power disturbance. For devices with a single supply, a 0.1-μF bypass capacitor is recommended. If there are multiple pins labeled V_{CC}, then a 0.01-μF or 0.022-μF capacitor is recommended for each V_{CC} because the V_{CC} pins will be tied together internally. For devices with dual supply pins operating at different voltages, for example V_{CC} and V_{DD}, a 0.1-μF bypass capacitor is recommended for each supply pin. It is acceptable to parallel multiple bypass capacitors to reject different frequencies of noise. 0.1-μF and 1-μF capacitors are commonly used in parallel. The bypass capacitor should be installed as close to the power terminal as possible for best results.

11 Layout

11.1 Layout Guidelines

Reflections and matching are closely related to loop antenna theory, but different enough to warrant their own discussion. When a PCB trace turns a corner at a 90° angle, a reflection can occur. This is primarily due to the change of width of the trace. At the apex of the turn, the trace width is increased to 1.414 times its width. This upsets the transmission line characteristics, especially the distributed capacitance and self–inductance of the trace — resulting in the reflection. It is a given that not all PCB traces can be straight, and so they will have to turn corners. Figure 28 shows progressively better techniques of rounding corners. Only the last example maintains constant trace width and minimizes reflections.

11.2 Layout Example

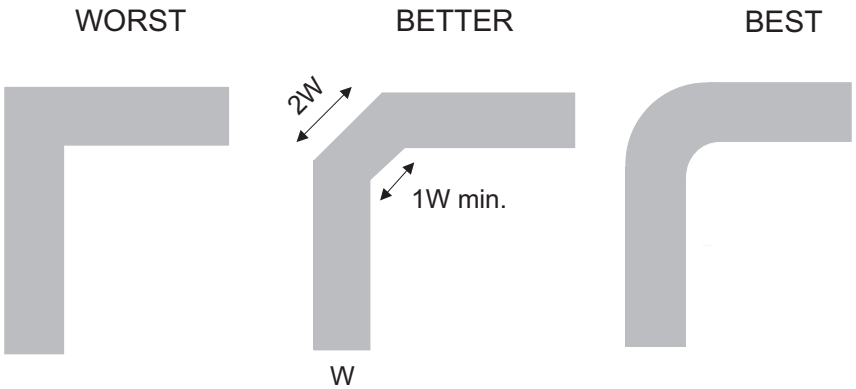

Figure 28. Trace Example

Copyright © 2005–2018, Texas Instruments Incorporated

12 Device and Documentation Support

12.1 Device Support

12.1.1 Device Nomenclature

Table 2. Parameter Description

SYMBOL	DESCRIPTION
V_{COM}	Voltage at COM
V_{NO}	Voltage at NO
r_{on}	Resistance between COM and NO ports when the channel is ON
r_{peak}	Peak ON-state resistance over a specified voltage range
$r_{on(flat)}$	Difference between the maximum and minimum value of r_{on} in a channel over the specified range of conditions
$I_{NO(OFF)}$	Leakage current measured at the NO port, with the corresponding channel (NO to COM) in the OFF state under worst-case input and output conditions
$I_{NO(PWROFF)}$	Leakage current measured at the NO port during the power-down condition, $V_+ = 0$
$I_{COM(OFF)}$	Leakage current measured at the COM port, with the corresponding channel (COM to NO) in the OFF state under worst-case input and output conditions
$I_{COM(PWROFF)}$	Leakage current measured at the COM port during the power-down condition, $V_+ = 0$
$I_{NO(ON)}$	Leakage current measured at the NO port, with the corresponding channel (NO to COM) in the ON state and the output (COM) open
$I_{COM(ON)}$	Leakage current measured at the COM port, with the corresponding channel (COM to NO) in the ON state and the output (NO) open
V_{IH}	Minimum input voltage for logic high for the control input (IN)
V_{IL}	Maximum input voltage for logic low for the control input (IN)
V_I	Voltage at the control input (IN)
I_{IH}, I_{IL}	Leakage current measured at the control input (IN)
t_{ON}	Turnon time for the switch. This parameter is measured under the specified range of conditions and by the propagation delay between the digital control (IN) signal and analog output (COM or NO) signal when the switch is turning ON.
t_{OFF}	Turnoff time for the switch. This parameter is measured under the specified range of conditions and by the propagation delay between the digital control (IN) signal and analog output (COM or NO) signal when the switch is turning OFF.
Q_C	Charge injection is a measurement of unwanted signal coupling from the control (IN) input to the analog (NO or COM) output. This is measured in coulomb (C) and measured by the total charge induced due to switching of the control input. Charge injection, $Q_C = C_L \times \Delta V_{COM}$, C_L is the load capacitance, and ΔV_{COM} is the change in analog output voltage.
$C_{NO(OFF)}$	Capacitance at the NO port when the corresponding channel (NO to COM) is OFF
$C_{COM(OFF)}$	Capacitance at the COM port when the corresponding channel (COM to NO) is OFF
$C_{NO(ON)}$	Capacitance at the NO port when the corresponding channel (NO to COM) is ON
$C_{COM(ON)}$	Capacitance at the COM port when the corresponding channel (COM to NO) is ON
C_I	Capacitance of control input (IN)
O_{ISO}	OFF isolation of the switch is a measurement of OFF-state switch impedance. This is measured in dB in a specific frequency, with the corresponding channel (NO to COM) in the OFF state.
BW	Bandwidth of the switch. This is the frequency in which the gain of an ON channel is –3 dB below the DC gain.
THD	Total harmonic distortion describes the signal distortion caused by the analog switch. This is defined as the ratio of root mean square (RMS) value of the second, third, and higher harmonic to the absolute magnitude of the fundamental harmonic.
I_+	Static power-supply current with the control (IN) pin at V_+ or GND

Copyright © 2005–2018, Texas Instruments Incorporated

12.2 Community Resources

The following links connect to TI community resources. Linked contents are provided "AS IS" by the respective contributors. They do not constitute TI specifications and do not necessarily reflect TI's views; see TI's Terms of Use.

TI E2E™ Online Community ***TI's Engineer-to-Engineer (E2E) Community.*** Created to foster collaboration among engineers. At e2e.ti.com, you can ask questions, share knowledge, explore ideas and help solve problems with fellow engineers.

Design Support ***TI's Design Support*** Quickly find helpful E2E forums along with design support tools and contact information for technical support.

12.3 Trademarks

E2E is a trademark of Texas Instruments.
All other trademarks are the property of their respective owners.

12.4 Electrostatic Discharge Caution

These devices have limited built-in ESD protection. The leads should be shorted together or the device placed in conductive foam during storage or handling to prevent electrostatic damage to the MOS gates.

12.5 Glossary

SLYZ022 — *TI Glossary*.

This glossary lists and explains terms, acronyms, and definitions.

13 Mechanical, Packaging, and Orderable Information

The following pages include mechanical, packaging, and orderable information. This information is the most current data available for the designated devices. This data is subject to change without notice and revision of this document. For browser-based versions of this data sheet, refer to the left-hand navigation.

Copyright © 2005–2018, Texas Instruments Incorporated

PACKAGING INFORMATION

Orderable Device	Status (1)	Package Type	Package Drawing	Pins	Package Qty	Eco Plan (2)	Lead/Ball Finish (6)	MSL Peak Temp (3)	Op Temp (°C)	Device Marking (4/5)	Samples
TS5A3166DBVR	ACTIVE	SOT-23	DBV	5	3000	Green (RoHS & no Sb/Br)	CU NIPDAU | CU SN	Level-1-260C-UNLIM	-40 to 85	(JASF, JASR)	Samples
TS5A3166DBVRE4	ACTIVE	SOT-23	DBV	5	3000	Green (RoHS & no Sb/Br)	CU NIPDAU	Level-1-260C-UNLIM	-40 to 85	JASF	Samples
TS5A3166DBVRG4	ACTIVE	SOT-23	DBV	5	3000	Green (RoHS & no Sb/Br)	CU NIPDAU	Level-1-260C-UNLIM	-40 to 85	JASF	Samples
TS5A3166DCKR	ACTIVE	SC70	DCK	5	3000	Green (RoHS & no Sb/Br)	CU NIPDAU	Level-1-260C-UNLIM	-40 to 85	(JF5, JFF, JFR)	Samples
TS5A3166DCKRE4	ACTIVE	SC70	DCK	5	3000	Green (RoHS & no Sb/Br)	CU NIPDAU	Level-1-260C-UNLIM	-40 to 85	(JF5, JFF, JFR)	Samples
TS5A3166DCKRG4	ACTIVE	SC70	DCK	5	3000	Green (RoHS & no Sb/Br)	CU NIPDAU	Level-1-260C-UNLIM	-40 to 85	(JF5, JFF, JFR)	Samples
TS5A3166YZPR	ACTIVE	DSBGA	YZP	5	3000	Green (RoHS & no Sb/Br)	SNAGCU	Level-1-260C-UNLIM	-40 to 85	JFN	Samples

(1) The marketing status values are defined as follows:
ACTIVE: Product device recommended for new designs.
LIFEBUY: TI has announced that the device will be discontinued, and a lifetime-buy period is in effect.
NRND: Not recommended for new designs. Device is in production to support existing customers, but TI does not recommend using this part in a new design.
PREVIEW: Device has been announced but is not in production. Samples may or may not be available.
OBSOLETE: TI has discontinued the production of the device.

(2) **RoHS:** TI defines "RoHS" to mean semiconductor products that are compliant with the current EU RoHS requirements for all 10 RoHS substances, including the requirement that RoHS substance do not exceed 0.1% by weight in homogeneous materials. Where designed to be soldered at high temperatures, "RoHS" products are suitable for use in specified lead-free processes. TI may reference these types of products as "Pb-Free".
RoHS Exempt: TI defines "RoHS Exempt" to mean products that contain lead but are compliant with EU RoHS pursuant to a specific EU RoHS exemption.
Green: TI defines "Green" to mean the content of Chlorine (Cl) and Bromine (Br) based flame retardants meet JS709B low halogen requirements of <=1000ppm threshold. Antimony trioxide based flame retardants must also meet the <=1000ppm threshold requirement.

(3) MSL, Peak Temp. - The Moisture Sensitivity Level rating according to the JEDEC industry standard classifications, and peak solder temperature.

(4) There may be additional marking, which relates to the logo, the lot trace code information, or the environmental category on the device.

(5) Multiple Device Markings will be inside parentheses. Only one Device Marking contained in parentheses and separated by a "~" will appear on a device. If a line is indented then it is a continuation of the previous line and the two combined represent the entire Device Marking for that device.

(6) Lead/Ball Finish - Orderable Devices may have multiple material finish options. Finish options are separated by a vertical ruled line. Lead/Ball Finish values may wrap to two lines if the finish value exceeds the maximum column width.

Important Information and Disclaimer: The information provided on this page represents TI's knowledge and belief as of the date that it is provided. TI bases its knowledge and belief on information provided by third parties, and makes no representation or warranty as to the accuracy of such information. Efforts are underway to better integrate information from third parties. TI has taken and continues to take reasonable steps to provide representative and accurate information but may not have conducted destructive testing or chemical analysis on incoming materials and chemicals. TI and TI suppliers consider certain information to be proprietary, and thus CAS numbers and other limited information may not be available for release.

In no event shall TI's liability arising out of such information exceed the total purchase price of the TI part(s) at issue in this document sold by TI to Customer on an annual basis.

OTHER QUALIFIED VERSIONS OF TS5A3166 :

- Automotive: TS5A3166-Q1

NOTE: Qualified Version Definitions:

- Automotive - Q100 devices qualified for high-reliability automotive applications targeting zero defects

TAPE AND REEL INFORMATION

REEL DIMENSIONS

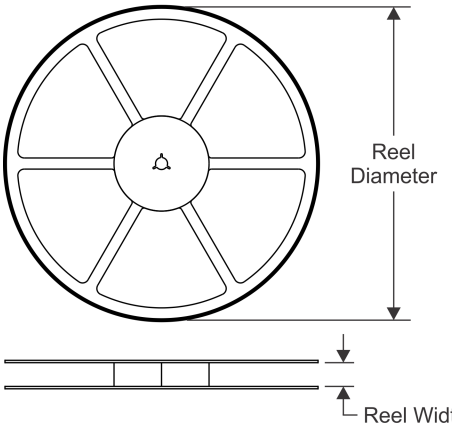

TAPE DIMENSIONS

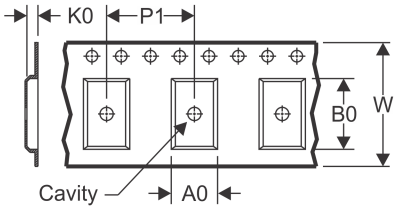

A0	Dimension designed to accommodate the component width
B0	Dimension designed to accommodate the component length
K0	Dimension designed to accommodate the component thickness
W	Overall width of the carrier tape
P1	Pitch between successive cavity centers

QUADRANT ASSIGNMENTS FOR PIN 1 ORIENTATION IN TAPE

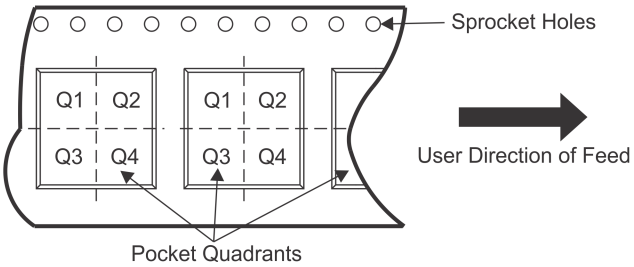

*All dimensions are nominal

Device	Package Type	Package Drawing	Pins	SPQ	Reel Diameter (mm)	Reel Width W1 (mm)	A0 (mm)	B0 (mm)	K0 (mm)	P1 (mm)	W (mm)	Pin1 Quadrant
TS5A3166DBVR	SOT-23	DBV	5	3000	180.0	8.4	3.23	3.17	1.37	4.0	8.0	Q3
TS5A3166DBVRG4	SOT-23	DBV	5	3000	178.0	9.0	3.23	3.17	1.37	4.0	8.0	Q3
TS5A3166DCKR	SC70	DCK	5	3000	180.0	8.4	2.47	2.3	1.25	4.0	8.0	Q3
TS5A3166DCKR	SC70	DCK	5	3000	178.0	9.0	2.4	2.5	1.2	4.0	8.0	Q3
TS5A3166YZPR	DSBGA	YZP	5	3000	178.0	9.2	1.02	1.52	0.63	4.0	8.0	Q1

TAPE AND REEL BOX DIMENSIONS

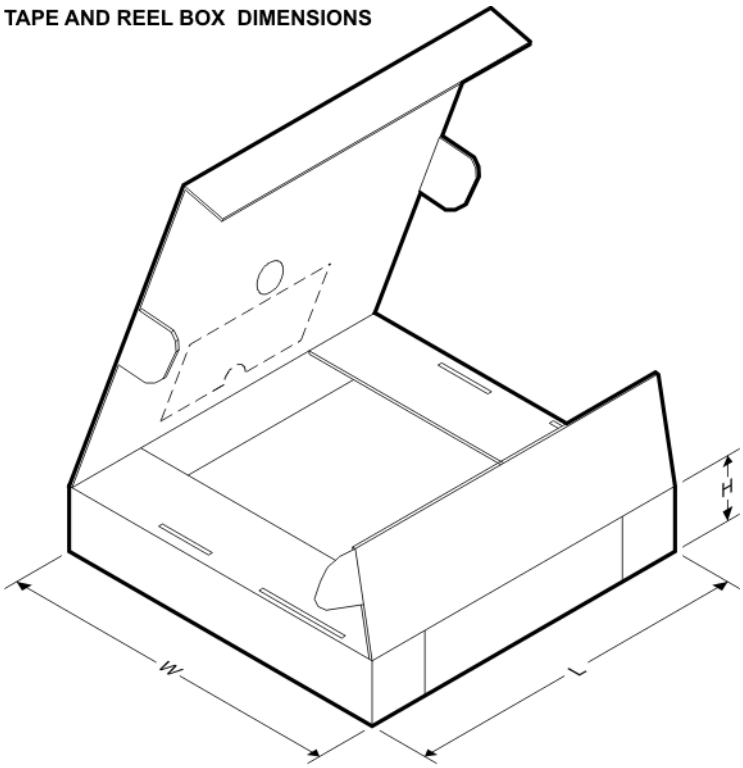

*All dimensions are nominal

Device	Package Type	Package Drawing	Pins	SPQ	Length (mm)	Width (mm)	Height (mm)
TS5A3166DBVR	SOT-23	DBV	5	3000	202.0	201.0	28.0
TS5A3166DBVRG4	SOT-23	DBV	5	3000	180.0	180.0	18.0
TS5A3166DCKR	SC70	DCK	5	3000	202.0	201.0	28.0
TS5A3166DCKR	SC70	DCK	5	3000	180.0	180.0	18.0
TS5A3166YZPR	DSBGA	YZP	5	3000	220.0	220.0	35.0

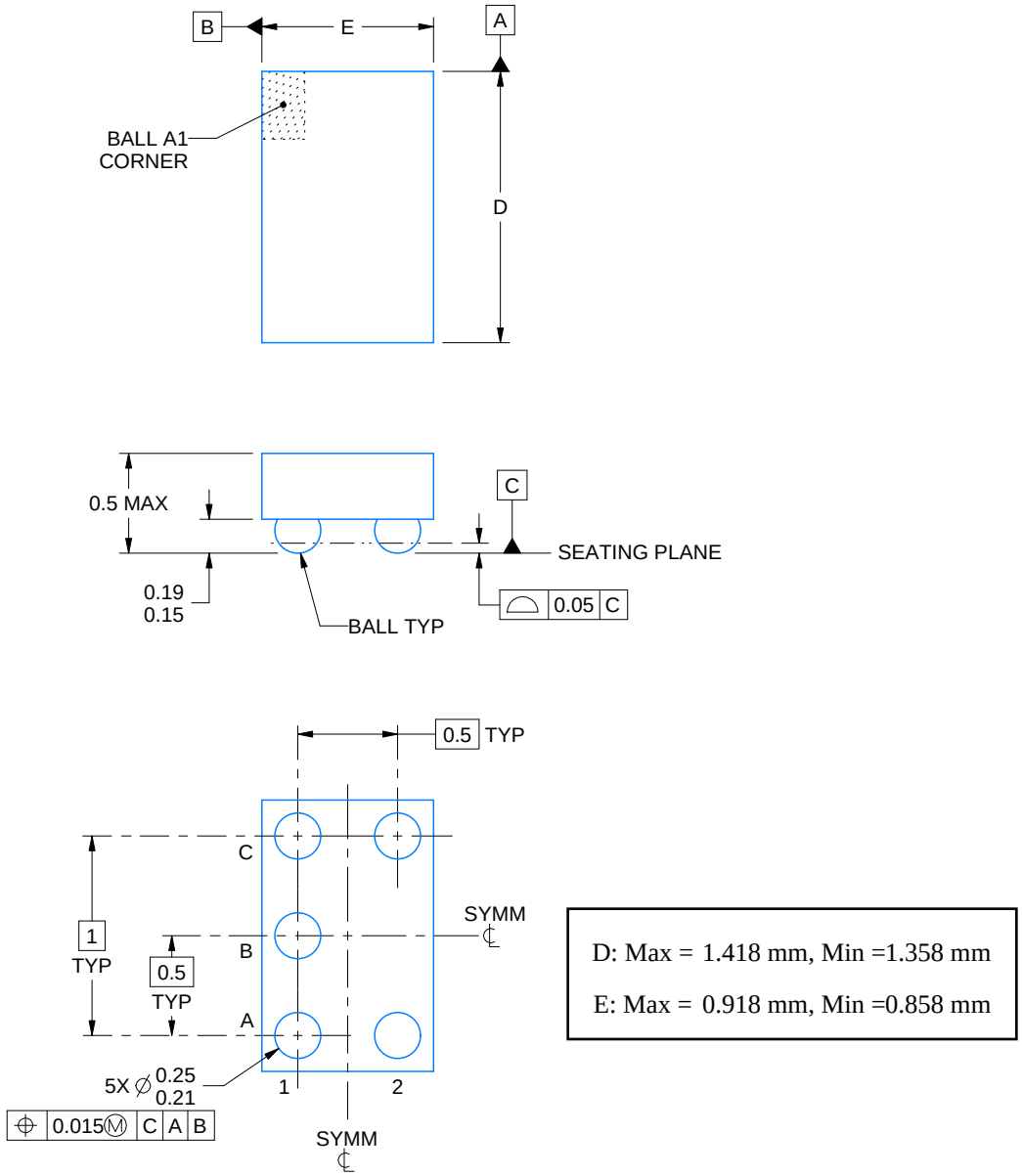

NOTES:

1. All linear dimensions are in millimeters. Any dimensions in parenthesis are for reference only. Dimensioning and tolerancing per ASME Y14.5M.
2. This drawing is subject to change without notice.

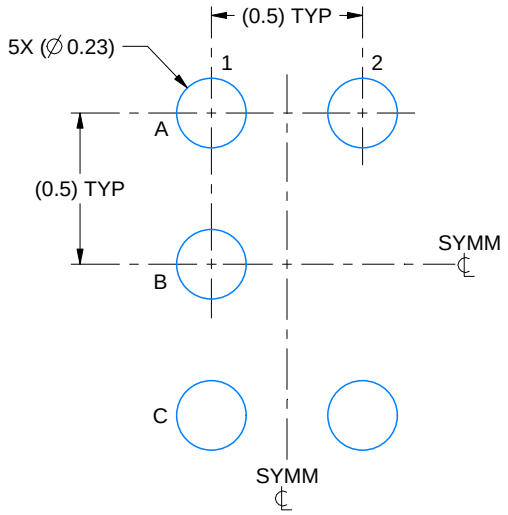

LAND PATTERN EXAMPLE
SCALE:40X

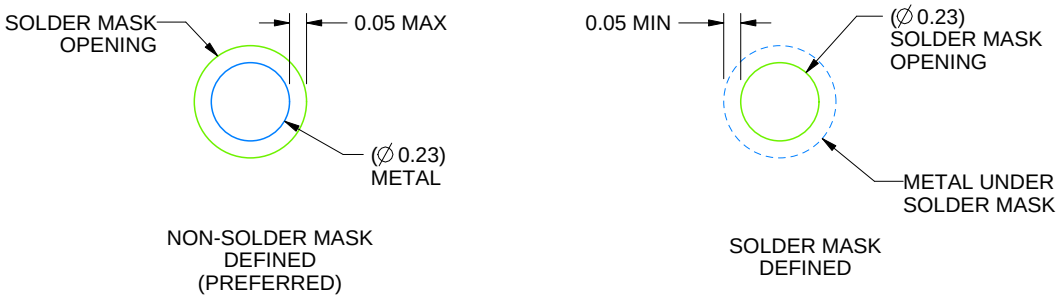

SOLDER MASK DETAILS
NOT TO SCALE

4219492/A 05/2017

NOTES: (continued)

3. Final dimensions may vary due to manufacturing tolerance considerations and also routing constraints. For more information, see Texas Instruments literature number SNVA009 (www.ti.com/lit/snva009).

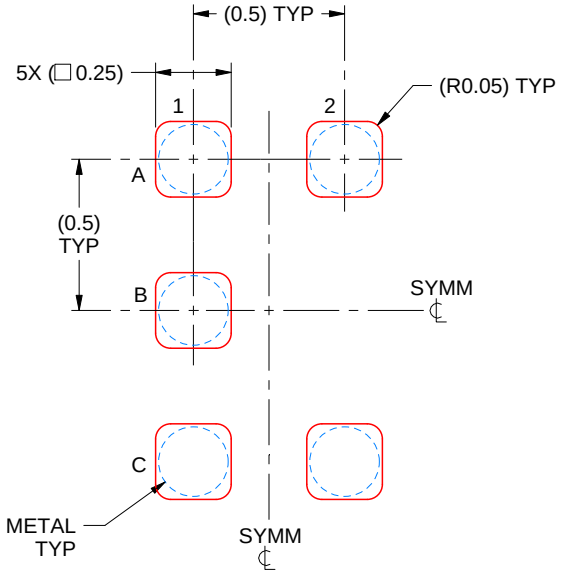

SOLDER PASTE EXAMPLE
BASED ON 0.1 mm THICK STENCIL
SCALE:40X

4219492/A 05/2017

NOTES: (continued)

4. Laser cutting apertures with trapezoidal walls and rounded corners may offer better paste release.

DCK (R–PDSO–G5) PLASTIC SMALL–OUTLINE PACKAGE

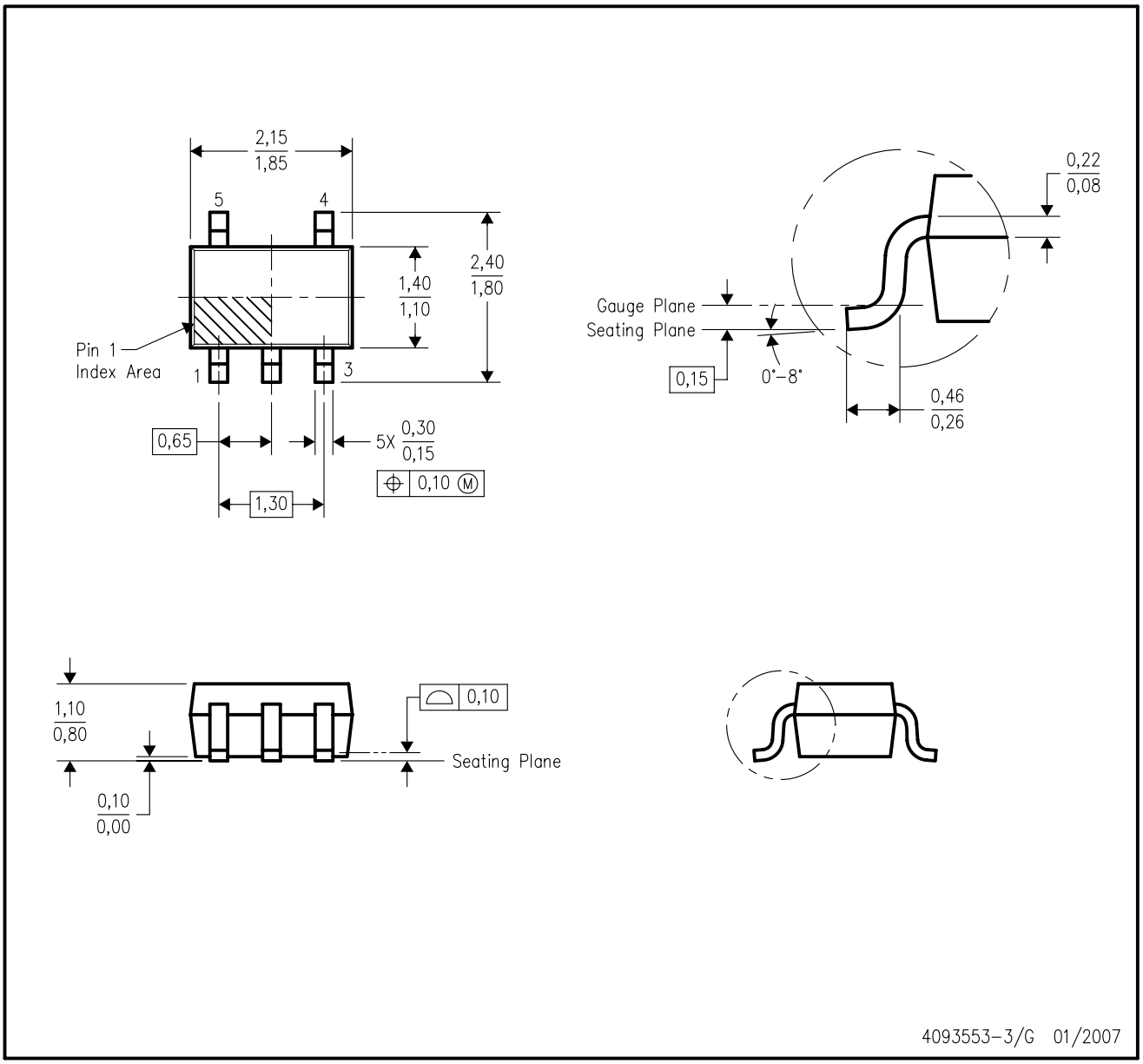

NOTES:
A. All linear dimensions are in millimeters.
B. This drawing is subject to change without notice.
C. Body dimensions do not include mold flash or protrusion. Mold flash and protrusion shall not exceed 0.15 per side.
D. Falls within JEDEC MO–203 variation AA.

DCK (R-PDSO-G5) PLASTIC SMALL OUTLINE

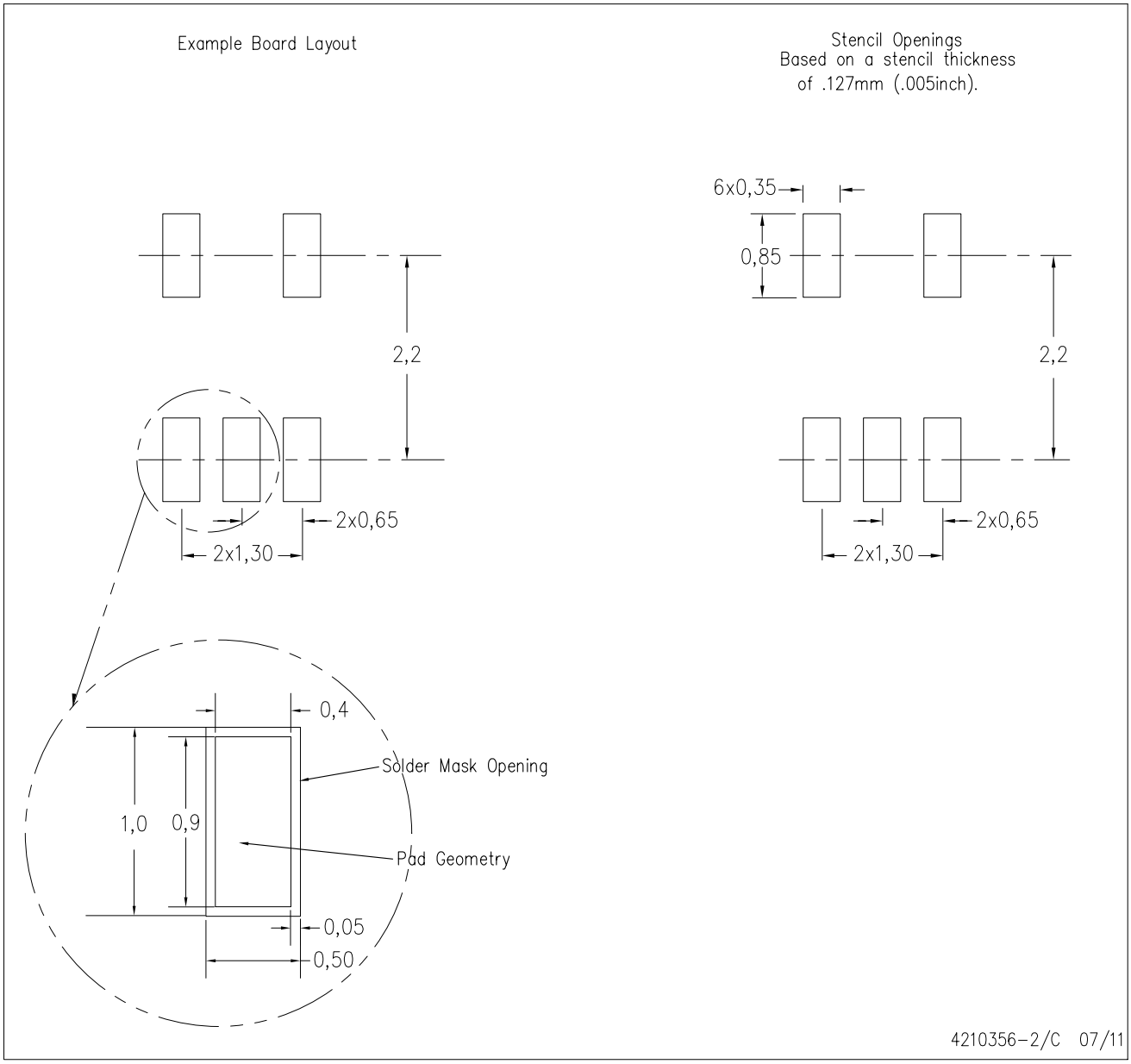

NOTES:
A. All linear dimensions are in millimeters.
B. This drawing is subject to change without notice.
C. Customers should place a note on the circuit board fabrication drawing not to alter the center solder mask defined pad.
D. Publication IPC-7351 is recommended for alternate designs.
E. Laser cutting apertures with trapezoidal walls and also rounding corners will offer better paste release. Customers should contact their board assembly site for stencil design recommendations. Example stencil design based on a 50% volumetric metal load solder paste. Refer to IPC-7525 for other stencil recommendations.

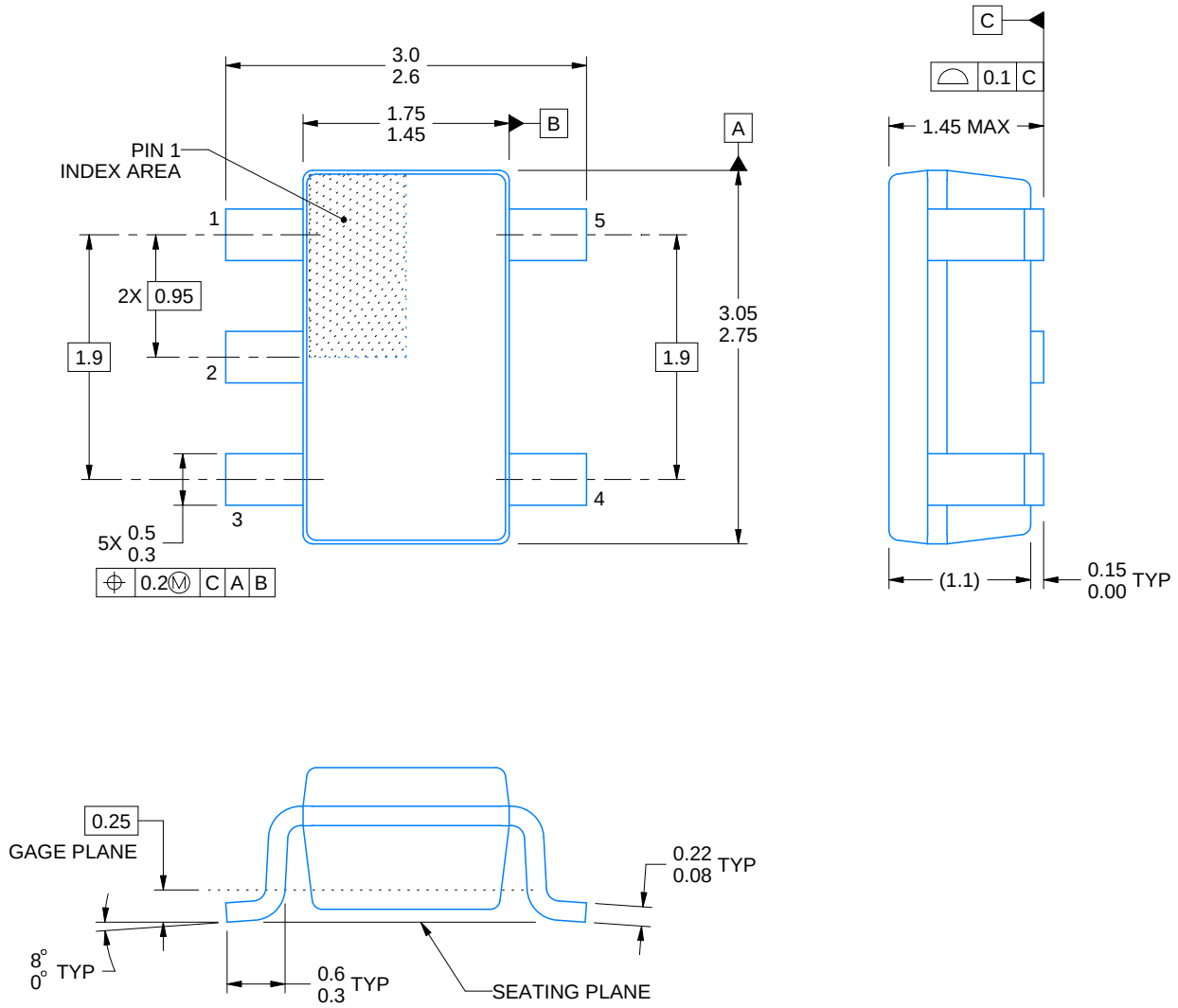

4214839/D 11/2018

NOTES:

1. All linear dimensions are in millimeters. Any dimensions in parenthesis are for reference only. Dimensioning and tolerancing per ASME Y14.5M.
2. This drawing is subject to change without notice.
3. Refernce JEDEC MO-178.
4. Body dimensions do not include mold flash, protrusions, or gate burrs. Mold flash, protrusions, or gate burrs shall not exceed 0.15 mm per side.

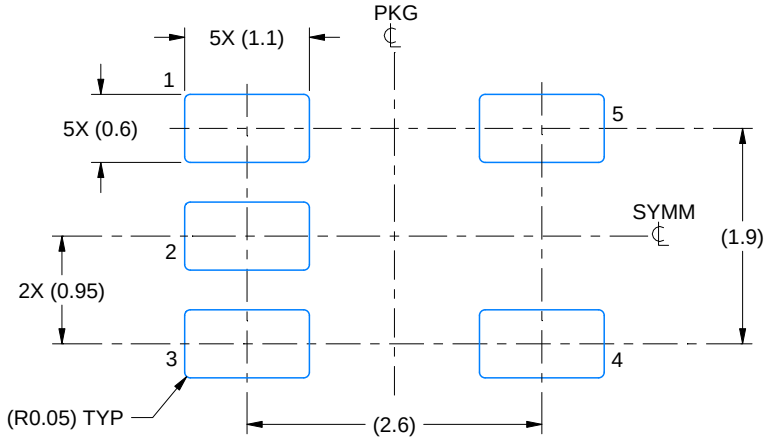

LAND PATTERN EXAMPLE
EXPOSED METAL SHOWN
SCALE:15X

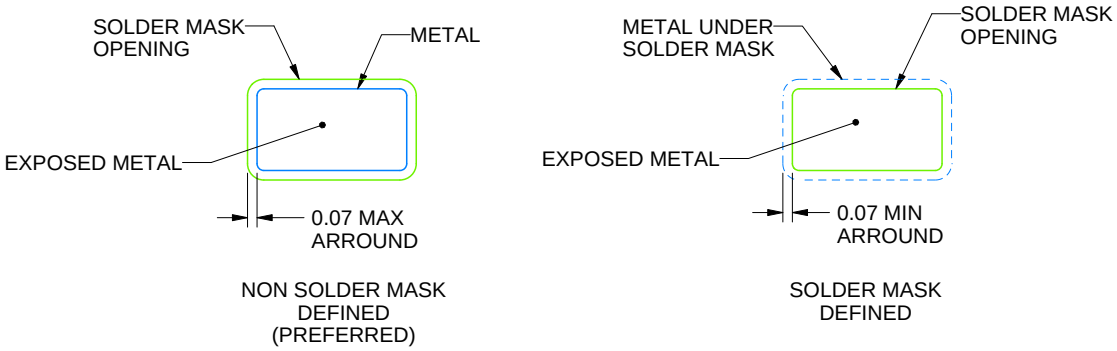

SOLDER MASK DETAILS

4214839/D 11/2018

NOTES: (continued)

5. Publication IPC-7351 may have alternate designs.
6. Solder mask tolerances between and around signal pads can vary based on board fabrication site.

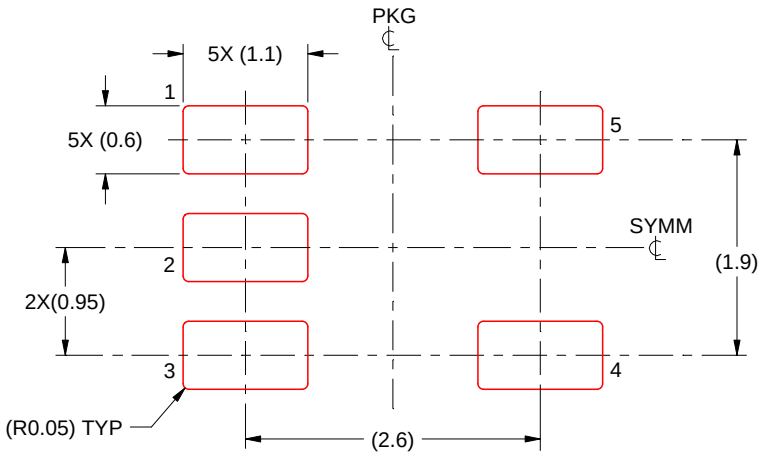

SOLDER PASTE EXAMPLE
BASED ON 0.125 mm THICK STENCIL
SCALE:15X

4214839/D 11/2018

NOTES: (continued)

7. Laser cutting apertures with trapezoidal walls and rounded corners may offer better paste release. IPC-7525 may have alternate design recommendations.
8. Board assembly site may have different recommendations for stencil design.

IMPORTANT NOTICE AND DISCLAIMER

TI PROVIDES TECHNICAL AND RELIABILITY DATA (INCLUDING DATASHEETS), DESIGN RESOURCES (INCLUDING REFERENCE DESIGNS), APPLICATION OR OTHER DESIGN ADVICE, WEB TOOLS, SAFETY INFORMATION, AND OTHER RESOURCES “AS IS” AND WITH ALL FAULTS, AND DISCLAIMS ALL WARRANTIES, EXPRESS AND IMPLIED, INCLUDING WITHOUT LIMITATION ANY IMPLIED WARRANTIES OF MERCHANTABILITY, FITNESS FOR A PARTICULAR PURPOSE OR NON-INFRINGEMENT OF THIRD PARTY INTELLECTUAL PROPERTY RIGHTS.

These resources are intended for skilled developers designing with TI products. You are solely responsible for (1) selecting the appropriate TI products for your application, (2) designing, validating and testing your application, and (3) ensuring your application meets applicable standards, and any other safety, security, or other requirements. These resources are subject to change without notice. TI grants you permission to use these resources only for development of an application that uses the TI products described in the resource. Other reproduction and display of these resources is prohibited. No license is granted to any other TI intellectual property right or to any third party intellectual property right. TI disclaims responsibility for, and you will fully indemnify TI and its representatives against, any claims, damages, costs, losses, and liabilities arising out of your use of these resources.

TI’s products are provided subject to TI’s Terms of Sale (www.ti.com/legal/termsofsale.html) or other applicable terms available either on ti.com or provided in conjunction with such TI products. TI’s provision of these resources does not expand or otherwise alter TI’s applicable warranties or warranty disclaimers for TI products.

Mailing Address: Texas Instruments, Post Office Box 655303, Dallas, Texas 75265
Copyright © 2019, Texas Instruments Incorporated

Looking for pricing, stock, or lifecycle information?

Click below to explore more details on WIN SOURCE:

- View TS5A3166DBVR on WIN SOURCE
- Texas Instruments Information

Optimize Your Supply Chain with WIN SOURCE Solutions

- Global Sourcing Solution
- Obsolete Management
- Cost Control Management
- Shortage Management
- Alternative Solution
- Excess Inventory Management